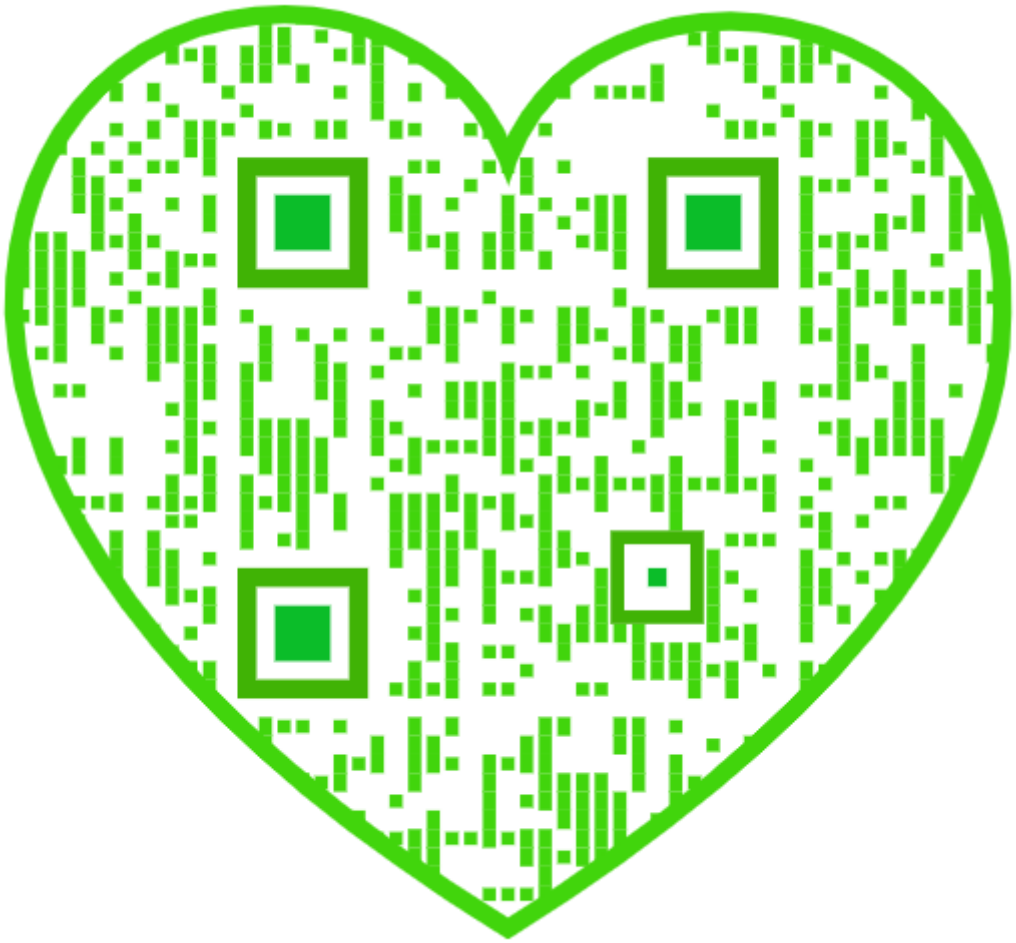

4-1611

THE MECHANICAL ENGINEERING OF POWER PLANTS.

BY

FREDERIC REMSEN HUTTON, E.M., PH.D.,

Professor of Mechanical Engineering in the School of Engineering of Columbia University.

FIRST EDITION.

FIRST THOUSAND.

NEW YORK:
JOHN WILEY & SONS.
LONDON: CHAPMAN & HALL, LIMITED.
1897.

Digitized by Google

Copyright, 1897,
BY
F. R. HUTTON.

ROBERT DRUMMOND, ELECTROTYPER AND PRINTER, NEW YORK.

666147

THV
.H908
1977

69 5 b 361

PREFACE.

THIS book has been undertaken with two distinct objects in view, and according to a principle suggested by these objects.

The first and primary intention is to provide a book to serve as a text-book in class-room work in a University which makes the education of engineers a part of its duty. This object has given the book its form and has determined its arrangement.

It must have been observed by every instructor that the most enthusiastic class of students who follow engineering in the schools are those who have had a previous experience in the shop or in the power house which has made them familiar with the conditions which there prevail, and has brought to their attention questions for which they have sought to find answers. It is the wish of its projector that, so far as that condition can be met by any book whatever, this book should put all students of engineering somewhat upon the footing of these fortunate persons. It must therefore present the machinery and appliances of the power house before the reader's mind from the practical or experimental side, and make him familiar with the power plant in its various forms, and seek to familiarize him with the solutions which experience and good judgment have proposed for problems of this sort.

It is believed that with this knowledge and with the training in the weighing of advantages and disadvantages which attach to any given solution the student is most satisfactorily fitted to take up as a later feature of his engineering study those principles of mechanics, physics, and thermodynamics upon which all successful practice must ultimately rest. If he is prepared by the practical and experimental treatment

first, he is more ready to appreciate the significance of the abstract and theoretical considerations which belong to the truly professional departments of engineering.

It is believed furthermore that this principle is a sound one and calculated to lead to the best results. If the beginning is made with general principles and fundamental theories, and their application made to come afterwards in an apparently secondary relation to the principles, a habit of mind is engendered which is dangerous to a wise application of theory to practice in early professional life. The temptation is to make practice square with the rational or transcendental departments of theory rather than to see in every illustration of successful practice the application of a sound theory which took account both of the experimental and the rational practice. May not this be one reason why inexperienced graduates have disappointed in the past both themselves and those who have sought to use and employ them? Their school-training from its point of view had unfitted them for the point of view which in life they must occupy. It is the case that in most departments of learning other than engineering, the method which has been found most satisfactory is the rise from the concrete and the object to the abstract and the principle.

With this end in view, it will be understood that this book is not intended to be a complete treatise upon the power plant, but solely upon that department which for the time being may be called "the *mechanical* engineering" of the power plant, as distinguished from the *dynamical* engineering of the power plant, which would rightly and properly form a second and further department of the subject. In that view the mathematical form has been avoided with intention almost throughout, and furthermore the tempting allurements to wander in the fields of design have been resisted in the main. It is felt that the subject of design might properly be based upon such knowledge as this treatise aims to impart, but belongs to a further stage of development and observation, and should receive a treatment from that other point of view which it has received from certain masters. That it might be

apparent, however, for student use that the book was only a foundation and not a complete and exhaustive discussion, considerable material has been thrown in the form of notes as appendices, which are to stand as open doors from the various chapters and subdivisions of the book through which the student may move onward for distinctly professional study if so inclined. References are also freely introduced in these appendices as a means of stimulating further and more advanced study. In class-room use it is intended to make use of much other and fuller illustration of detail by photograph, lantern-slide, and drawing, so that it has not been thought possible or advisable to try and include every variant from usual forms. Growth, change, and improvement must also be met by such supplementary illustrations.

The second object has been to furnish a compact view of power-house practice which should serve for a group of persons, both students and others, to whom the problems of design were foreign and undesired, and yet who would appreciate a non-mathematicl treatment of the problem as a whole. The power house occupies in the industrial and business atmosphere of this period an importance which it never has had hitherto, and the success of business enterprises and manufacturing corporations is often bound up in the satisfactory condition of their power house. It is desired to enable persons in responsible relations to it to derive something of benefit and information of the same sort which is necessary to those who are employed under them in the power house, so that they may be able to judge fairly of the soundness of opinions which may be offered upon power-house questions.

Such persons also are those who as graduates from technical schools go to positions of responsibility and trust involving power problems, and yet for whom the masterly treatises on design and construction which have been hitherto written would either be too voluminous, because they contained much of valuable material which was of no use to them, or would not meet the needs of the case, because they viewed the problems from a different standpoint.

In this view it is not to be considered that there is much of original or created material to be found in the book, for the reason that to have been original would have frustrated its purpose. It will further appear that much of it is simple. It will be a pleasure to find that the arrangement of the material shall have been sufficiently novel and convenient to justify its being cast in this form, and if the apparent simplicity shall have resulted from a successful attempt to make clear the sometimes complicated matters in question.

It is impossible at this late day to present anything which may not have been presented by some one else hitherto, but the obligations of the writer are particularly to be expressed to Professor R. H. Thurston and Mr. Jay M. Whitham for the kindly permission to make use of illustrations which had already served them, and in the department of boilers to the Hartford Steam Boiler Insurance and Inspection Company, through whose president, Mr. Jeremiah M. Allen, permission was obtained to present illustrative material which they had prepared as the result of many years' experience in the inspection and improved construction of the various types of shell boilers. Many makers and builders of engines and power-house appliances have also been most courteous in permitting use of illustrations.

It is not the modern custom to dedicate a book to an individual. This one will be recognized, however, by a number of practising engineers as being the embodiment and an extension of the course in Engines and Boilers which has been for many years a feature of a relation which the author has found particularly agreeable. For this reason, if anything like a dedication were permitted him, it would be to the body of graduates in engineering from an American Technical School, the memory of whose interest in the subject and whose cordial cooperation and earnestness in its development in the classroom have made the preparation of this practical treatise a pleasure and a privilege.

F. R. HUTTON.

COLUMBIA UNIVERSITY, NEW YORK.
January, 1897.

TABLE OF CONTENTS.

CHAPTER I.

INTRODUCTORY.

PAR.		PAGE
1.	Sources of Motor Energy	1
2.	Analysis of Development of a Power Plant	3
3.	Units of Output in a Power Plant	4
4.	Measurement of Output	5
5.	The Scheme of Classification	5

PART I.

CHAPTER II.

THE MECHANISM OF ENGINES.

6.	The Horse-power of a Cylinder	7
7.	" " " " the Resistance	8
8.	Transformations of the Horse-power Formula	9
9.	Essential Parts of a Typical Reciprocating Steam-engine	9
10.	General Features of the Typical Engine Mechanism	11
11.	Length of the Typical Reciprocating Engine	17
12.	Oscillating Engine	17
13.	Trunk-engine	20
14.	Back-acting Engine	23
15.	Engines Classified by Arrangement of Cylinder-axis	26
16.	Horizontal Engine	26
17.	Vertical Engine	31
18.	Inverted Vertical Engine	33
19.	Direct Vertical Engine	36
20.	Inclined Engine	36
21.	Combined Horizontal and Vertical Engines	40
22.	Direct-acting and Beam Engines	41
23.	Beam-engines	42
24.	Structure of Beam-engines	43
25.	Objections to the Beam-engine. Side-lever Engine	49
26.	The Rotary Steam-engine	52

PAR. PAGE
27. Rotary Steam-engines in which Pistons and Abutment alternate their Functions 54
28. Rotary Steam-engine with Persistent Functions of Piston and Abutment 57
29. Advantages of the Rotary Engine 59
30. Disadvantages of the Rotary Engine 60
31. The Steam Turbine 61
32. Square-piston Engines and Disk Engines 61
33. Sundry Special Mechanisms 66

CHAPTER III.

ENGINES CLASSIFIED BY USE OF STEAM.

34. Introductory 70
35. High-speed Engines 70
36. Low-speed Engines 71
37. Piston-speed in Feet per Minute 72
38. Double- and Single-acting Engines 73
39. The Cornish Engine 73
40. Operation of the Cornish-engine Cylinder 74
41. Cataract of the Cornish Pumping-engine 75
42. Advantages and Disadvantages of the Cornish Pumping-engine 76
43. Single-acting Rotative Engines 77
44. Expansive and Non-expansive Working of Engines 79

CHAPTER IV.

CONDENSING AND NON-CONDENSING ENGINES.

45. Introductory 85
46. Advantages of the Condensing Engine 87
47. Disadvantages of the Condensing Engine 89
48. The Condenser of a Condensing Engine 91
49. Jet and Surface Condensers 97
50. The Cold-well 97
51. The Air-pump and Foot-valve 99
52. The Circulating-pump 102
53. The Independent Air-pump 103
54. The Gravity Condenser 105
55. The Siphon or Injector Condenser 106
56. The Ejector Condenser with Pump 109
57. The Exhaust-steam Ejector Condenser 111
58. Pump Condensers 112
59. The Hot-well 114
60. The Feed-pump 115

CHAPTER V.

SIMPLE AND CONTINUOUS-EXPANSION ENGINES.

61. Introductory 116
62. Action of Steam in Compound Engines 118

PAR. PAGE
63. Mechanisms of the Compound Engine..... 120
64. Beam Compound Engines..... 125
65. Diagram of Steam-effort in a Compound Engine..... 125
66. Arrangement of Cylinders in Multiple-expansion Engines..... 131
67. Reheaters in Compound Engines..... 131
68. Compounding above the Atmosphere..... 134
69. Compound Locomotives..... 137
70. Advantages of the Compound Engine..... 139
71. Disadvantages of the Compound Engine..... 141
72. Proportions of Compound-engine Cylinders..... 142

CHAPTER VI.

SUNDRY CLASSIFICATIONS. CONTROL OF ENERGY.

73. Review and Introductory..... 144
74. Control of Energy of the Steam in an Engine. Throttling-engines.. 145
75. Cut-off Regulation of a Steam-engine. Cut-off Engines..... 147
76. Advantages and Disadvantages of the Throttling-engine..... 148
77. " " " " " Cut-off Engine..... 150
78. Summary and Conclusions..... 152

CHAPTER VII.

VALVES AND VALVE-GEARING.

79. Introductory..... 153
80. Three-way and Four-way Cock Valves..... 154
81. Plain Slide-valve. Working Full Stroke..... 157
82. The Eccentric is a Crank..... 159
83. Setting of a Plain Slide-valve Working Non-expansively..... 161
84. The B Valve..... 163
85. Lap in the Slide-valve..... 164
86. Effects of Lap..... 165
87. Inside Lap..... 166
88. Effects of Inside Lap..... 166
89. Exhaust-clearance..... 167
90. Lead in the Slide-valve..... 168
91. Effects of Lead..... 169

CHAPTER VIII.

VALVE-GEARING, CONTINUED.

92. Setting of Slide-valve without Access to Valve-chest. Setting by Sound..... 170
93. Motion-curves for Slide-valves..... 172
94. The Zeuner Polar Diagram for Slide-valves..... 176

PAR. PAGE
95. Use of the Zeuner Polar Diagram 180
96. Valve-gear Problems and Design 181
97. Limitations of the Single Slide-valve 183
98. Valve-gear for High Degrees of Expansion. Two-valve System .. 184
99. Three- and Four-valve Gears 188

CHAPTER IX.

VALVE-GEARING, CONTINUED.

100. Shortening Steam-passages 189
101. " the Throw of the Valve. Allen Valve 191
102. Gridiron Slide-valve 192
103. Balancing Slide-valves. Piston-valves 193
104. Pressure-plate Systems 196
105. Valves Taking Steam Internally 201
106. " with Counter-pressure 201
107. Poppet-valves 202

CHAPTER X.

CAM AND RELEASE VALVE-GEARS.

108. Cam Valve-gears 204
109. Trip or Releasing Valve-gears 210
110. Corliss Valve-gears 211
111. Advantages of Trip Valve-gear 215
112. Disadvantages of Trip Valve-gear 215
113. Steam-thrown Valves 216

CHAPTER XI.

REVERSING VALVE-GEARS. LINK-MOTIONS.

114. Reversing-gears with One Eccentric 220
115. " " " Two Eccentrics. Gab-hooks 222
116. Link-motion of Howe or Stephenson 223
117. Features of the Stephenson Link-motion 225
118. Gooch's Link-motion 227
119. Allan's Link-motion 228
120. Radial Valve-gear. Joy's Valve-gear 228
121. Walschaert Valve-gear 230
122. Brown, Marshall, Hackworth, and Angstrom Valve-gears 231
123. Allen Link-motion 232
124. Link-motions for Riding Cut-off-valves 233
125. Power Reversing-gears 233

CHAPTER XII.

VARIABLE-CUT-OFF VALVE-GEARS.

PAR.		PAGE
126.	Introductory	235
127.	Cut-off Varies by Varying Throw of Valve	235
128.	" " " " Lap of Valve	236
129.	" " " " Angular Advance of Eccentric	239
130.	" " " " Point of Release or Trip	240

CHAPTER XIII.

GOVERNORS FOR STEAM-ENGINES.

131.	Introductory	241
132.	Classifications of Governors	243
133.	Fly-ball or Watt Conical-pendulum Governor	245
134.	Theory of the Watt Governor	246
135.	Defects of the Fly-ball Governor	247
136.	Loaded Governors	247
137.	Parabolic-governor	249
138.	Balanced Governor without Spring	251
139.	Balanced or Spring Governors	253
140.	Shaft-governors	254
141.	Inertia-governors	256
142.	Spindle- and Shaft-governors Compared	258
143.	Resistance-governors	258
144.	Electromagnetic Governors	260
145.	Dynamometric Governors	261
146.	Safety-stops	262
147.	Marine-engine Governors	263
148.	Connections of Governor to Control Engine	264

CHAPTER XIV.

ENGINE FOUNDATIONS AND BED-PLATES.

149.	Introductory	265
150.	The Bed-plate of a Horizontal Engine	265
151.	The Bed or Frame of a Vertical Engine	271
152.	The Foundation of an Engine	273
153.	Construction of Engine-foundations	275
154.	Footings to Prevent Vibration	276
155.	Foundation-bolts	278
156.	Alignment of Foundation Template	280
157.	Locating the Bed plate on the Foundation	281
158.	Alignment of the Outer Pillow-block or Shaft-bearing	283

CHAPTER XV.

CYLINDER, PISTON, AND PISTON-ROD.

PAR.		PAGE
159.	The Cylinder-casting	287
160.	The Counterbore	289
161.	Cylinder-cocks and Snifting-valves	290
162.	The Cylinder-jacket or Lagging	291
163.	The Structure of the Piston	293
164.	The Piston-packing	295
165.	The Piston-rings	297
166.	The Piston-rod	302
167.	The Stuffing-box	305
168.	Air-valves	310

CHAPTER XVI.

CROSS-HEAD. GUIDES. CONNECTING-ROD.

169.	The Guides or Slides	311
170.	The Cross-head	314
171.	The Cross-head Pin or Wrist-pin	319
172.	Parallel Motions	319
173.	The Connecting-rod	320
174.	The Stub End	321
175.	Forked-end Connecting-rod. Double Rods	327

CHAPTER XVII.

CRANK. SHAFT. ECCENTRIC. FLY-WHEEL.

176.	The Crank-shaft	329
177.	The Crank-pin	330
178.	The Crank	332
179.	The Locomotive Crank and Shaft	334
180.	The Marine Crank-shaft	335
181.	The Main or Crank Bearing	337
182.	The Eccentric	340
183.	The Eccentric-rod and Valve-stem	341
184.	The Fly-wheel	342
185.	The Strains in Fly-wheels	344
186.	Solid and Segmental Fly-wheels	345
187.	Fly-band-wheels	348
188.	Composite Band-wheels	348
189.	Conclusions and General	348

CHAPTER XVIII.

PIPING FOR THE ENGINE AND ITS ATTACHMENTS.

190.	General. Throttle-valve	350
191.	Steam-pipe	351

PAR. PAGE
192. Expansion of Steam-pipe. Expansion-joints and Hanging..... 354
193. Grading of Steam-pipe..... 356
194. Drainage of Steam-pipe..... 357
195. Non-conducting Coverings..... 362
196. Exhaust-pipe..... 363
197. Oil-extractors..... 365
198. Drip-connections..... 368
199. Sundry Connections and Attachments..... 369
200. Summary..... 369

PART II.

CHAPTER XIX.

THE STEAM-BOILER. GENERAL CONSTRUCTION.

201. Introductory..... 370
202. Shapes for Steam-boilers..... 370
203. Materials for Steam-boilers. Copper and Cast Iron..... 371
204. Wrought-iron and Steel Boilers..... 374
205. Steel Boilers..... 376
206. Testing of Boiler-plate..... 378
207. Thickness of Boiler-plate..... 378
208. Curving of Plates for Shells..... 380
209. Arrangement of Rings of Plate in Shells..... 383
210. Heads of Boiler-shells. Flanging..... 385
211. Joints in Boiler-shells. Welding..... 387
212. Riveted Joints for Boiler-shells..... 389
213. Construction of a Riveted Joint. Punching and Drilling..... 390
214. Punching and Drilling Compared..... 392
215. Hand- and Machine-riveting..... 395
216. Design of a Riveted Joint. Strength..... 399
217. Rivets and their Arrangement..... 400
218. Failure of a Riveted Joint..... 405
219. The Drift-pin..... 406
220. Stays and Staying..... 407
221. Manholes..... 416
222. Hand-holes..... 419
223. Edge-planing and Calking..... 419
224. Sundry Details of Construction..... 419

CHAPTER XX.

TYPES OF BOILERS. EXTERNALLY-FIRED SHELL BOILERS.

225. Classification of Types..... 421
226. Plain Cylinder-boiler..... 422

PAR. PAGE
227. Domes and Steam-drums 425
228. Conditions suggesting the Use of the Plain Cylinder-boiler 433
229. Objections to the Cylinder-boiler 434
230. The Elephant, French, or Union Boiler 434
231. The Mud-drum 437
232. The Cylinder Flue-boiler 439
233. Uses and Application of the Cylinder Flue-boiler 444
234. The Cylinder Tubular or Multitubular Boiler 444
235. Boiler-tubes 445
236. Ribbed Tubes. Serve-tubes. Retarders 446
237. Expanding of Tubes 446
238. Staying of Tubular and Flue Boilers 449
239. Uses and Application of the Cylinder Tubular Boiler 449

CHAPTER XXI.

TYPES OF BOILERS. EXTERNALLY-FIRED SECTIONAL BOILERS.

240. Definition of a Sectional Boiler 451
241. Advantages of the Sectional Principle 451
242. Disadvantages of the Sectional Principle 453
243. Classes of Sectional Boiler 455
244. Spherical Unit Type 458
245. Vertical Tubular Type 460
246. Horizontal Straight Tubular Type 460
247. Closed-tube Types. Field Tubes 464
248. Bent- or Curved-tube Types 468
249. Sundry Types of Externally-fired Boiler 470

CHAPTER XXII.

TYPES OF BOILERS. INTERNALLY-FIRED SHELL BOILERS.

250. Internally-fired Boilers. General 471
251. Cornish and Lancashire Boilers 473
252. The Galloway Boiler 474
253. The Scotch or Cylindrical Marine Boiler 477
254. The Rectangular Marine Boiler (Martin Boiler) 480
255. The Typical Locomotive Boiler 482
256. Modifications of the Locomotive Boiler 486
257. The Upright Boiler 490
258. Modifications of the Upright Boiler 492
259. The Fire-engine Boiler 495

CHAPTER XXIII.

TYPES OF BOILERS. INTERNALLY-FIRED SECTIONAL BOILERS.

260. General 498
261. The Water-tube Boiler 498

PAR. PAGE
262. The Coil-boiler 499
263. Sundry Types. Conclusion 502

CHAPTER XXIV.

BOILER-SETTINGS.

264. General. Side Walls 504
265. Buck-stays and Tie-rods 505
266. Hanging of Boilers 508
267. Boiler-fronts 510
268. The Dead-plate and Mouthpiece of the Furnace 516
269. The Ash-pit 518
270. The Furnace 520
271. The Grate-bars. Stationary Grates 521
272. Shaking and Dumping Grate-bars 525
273. Step-grates 527
274. Mechanical or Travelling Grates 529
275. Mechanical Stokers 530
276. Inclined and Horizontal Grates 535
277. The Bridge-wall 538
278. The Combustion-chamber 543
279. The Back Connection 545
280. The Front Connection 546
281. The Flue to the Chimney-stack 546
282. The Damper and Damper Regulator 548
283. The Chimney 551
284. Artificial Draft 553
285. Advantages of Artificial Draft 554
286. Disadvantages of Artificial Draft 555

CHAPTER XXV.

THE BOILER-FURNACE AS THE ORIGIN OF POWER.

287. Calorific Power of a Fuel 557
288. Force corresponding to the Combustion of One Pound of Fuel 559
289. Heat of Combustion in the Furnace 560
290. Pounds of Coal Burned per Square Foot of Grate 560
291. Pounds of Water per Pound of Coal Burned 562
292. " " " " Horse-power per Hour 563
293. Transfer of Heat 564
294. Ratio of Grate-surface to Heating-surface 565
295. Evaporation per Square Foot of Heating-surface 566
296. Pounds of Air required per Pound of Coal 567
297. Oil as Fuel 567
298. Advantages of Boiler-firing with Oil 568

PAR. PAGE
299. Disadvantages of Boiler-firing with Oil 569
300. Gas as Fuel 570
301. Smoke-prevention 573

CHAPTER XXVI.

BOILER ACCESSORIES AND APPLIANCES.

302. Introductory 578
303. Steam-gauge 578
304. Standardization or Calibration of Steam-gauges 581
305. Recording-gauges 582
306. Water-gauges 582
307. The Glass Water-gauge and Column-pipe 583
308. The Gauge-cocks 587
309. Float Water-gauges 589
310. Low-water Alarms 589
311. Fusible or Safety Plugs 590
312. Introduction of the Feed-water 591
313. The Feed-pipe and Feed-valves 592
314. The Supply of Feed-water to the Boiler 593
315. The Fly-wheel Pump 595
316. The Direct-acting Pump 596
317. The Injector 599
318. The Handling of the Injector 600
319. Advantages and Disadvantages of the Injector 602
320. The Economy of Preheating the Feed-water 603
321. Exhaust-steam Heaters 603
322. Flue-heaters or Economizers 605
323. Automatic Feeding Apparatus 609
324. The Blow-off Valve 610
325. The Safety-valve 611
326. Forms of Safety-valve 612

CHAPTER XXVII.

CARE AND MANAGEMENT OF BOILERS.

327. Firing 616
328. Cleaning Fires 617
329. Banking Fires 617
330. Regulation of the Fire and Pressure of Steam 618
331. Cleaning the Heating-surface Outside 618
332. Boiler-scale or Incrustation 619
333. Inconveniences due to Boiler-scale 622
334. Removal of Boiler-scale 623
335. Prevention of Scale-formation 625

PAR. PAGE
336. Previous Purification of Feed-water ... 626
337. Filtration of Feed-water ... 628
338. Deterioration or Wear and Tear of Boilers ... 629
339. Overheating of Boilers ... 629
340. Unequal Expansion and Contraction of Boilers ... 630
341. Corrosion External ... 631
342. " Internal ... 632
343. Pitting, Wasting, and Grooving ... 634
344. Repairs. General ... 635
345. Patches ... 635

CHAPTER XXVIII.

BOILER INSPECTION AND TESTING. BOILER-EXPLOSIONS.

346. Boiler-inspection ... 637
347. The Steam-pressure Test ... 638
348. The Hot-water-pressure Test ... 638
349. The Cold-water-pressure Test or Hydrostatic Test ... 638
350. The Hammer Test ... 639
351. Boiler-explosions. General ... 639
352. Boiler Ruptures because too Weak ... 640
353. " " from Excess of Pressure ... 641
354. Theory of Boiler-explosions ... 642
355. Energy resident in Hot Water under Pressure ... 642
356. Reaction in Boiler-explosions ... 643
357. Procedure when a Boiler is in Danger of Rupture ... 644

PART III.

CHAPTER XXIX.

MANAGEMENT AND RUNNING OF ENGINES.

358. General ... 645
359. To Start a Non-condensing Engine ... 645
360. " " " Condensing Engine ... 647
361. " " " Compound Engine ... 648
362. Lubrication of the Engine ... 649
363. " " " Cylinder and Valves ... 649
364. Graphite as a Lubricant ... 652
365. Lubrication of Bearings ... 652
366. Tests of Lubricants ... 656
367. Accidents in the Engine-room ... 657

CHAPTER XXX.

TESTING OF THE POWER PLANT FOR EFFICIENCY.

368. General ... 660
369. The Boiler-test ... 660

PAR. PAGE
370. The Flue-gases 661
371. The Calorimeter 662
372. Report of a Boiler-test 662
373. The Engine-test 663
374. The Dynamometer 663
375. The Indicator 664
376. Deductions from the Indicator-card 666

CHAPTER XXXI.

GENERAL REMARKS UPON THE POWER PLANT.

377. Concentrated or Subdivided Steam-power 668
378. Distribution of Power by Electricity, Gas, or Air 670
379. Location of a Power Plant 671
380. Construction of a Power House 673
381. Arrangement of the Power Plant 674
382. Fire-protection of the Power Plant 675
383. Floors of the Power Plant 675

LIST OF ILLUSTRATIONS.

FIG.		PAGE
1.	Typical Horizontal Engine (C. and G. Cooper)	12
2.	Right-hand and Left-hand Engine	14
3.	Throw Over and Under	14
4.	Yoke Mechanism, Clayton Compressor	16
5.	Oscillating-cylinder Engine, Danube River	19
6.	Reciprocating Parts of Case Oscillating Engine	20
7.	Case Oscillating-cylinder Engine	20
8.	Root's Trunk-engine	21
9.	Bacon's Trunk-engine	22
10.	Engine of H. M. S. Bellerophon	24
11.	Back-acting River-boat Engine, S. S. Belle	25
12.	Back-acting Engine of H. M. S. Agincourt	27
13.	Vertical Blowing engine, Back-acting	28
14.	Rand Horizontal Back-acting Air-compressor	29
15.	Vertical Steel-rod Frame, Hungarian State Railway	32
16.	Inverted Vertical Engine, Bethlehem Roll Mill	33
17.	Typical Fore-and-aft Triple-expansion Marine Engine	34
18.	Inverted Vertical Allis Pumping-engine at Milwaukee	35
19.	Vertical Pumping-engine with Overhead Fly-wheel	37
20.	Inclined Diagonal Engine of L. B. & S. C. Ry	38
21.	Inclined Engine	39
22.	Inclined Engine for Pumping (Gaskill)	40
24.	Combined Horizontal and Vertical Engine	41
30.	Beam-engine of Skiddy	44
31.	Beam-engine, Cruiser Chicago	46
32.	Leavitt-Lawrence Beam-engine	47
33.	Gaskill Beam-engine with Horizontal Beam	48
34.	Dean Triangular-beam Pumping engine	49
35.	Corliss Pawtucket Pumping-engine	50
36.	Gaskill Beam Pumping-engine	51
37.	Copeland's Side-lever Marine Engine of 1849	52
38.	Oscillating-beam Engine of U. S. Monitor Monadnock	53
39.	Silsby and La France Rotary Engine	55
40.	Baldwinsville Engine	56

FIG.		PAGE
41.	Challenge Reversible Rotary Engine	57
42.	Bramah Engine	58
43.	Dow's Steam Turbine	62
44.	" " "	62
45.	Parson's Steam Turbine	63
46.	Delaval Steam Turbine	64
47.	Dake Square-piston Engine	64
48.	Walters Pendulum-engine	65
49.	West's or Colt's Disk-engine	66
50.	Gardner Three-cylinder Engine	67
51.	Hicks Engine	68
52.	" "	68
53.	Wells' Balanced Engine	69
60.	Cornish Pumping-engine of Brooklyn Water-works	73
61.	Cornish Cylinder Section	74
62.	Cornish Cataract Section	76
63.	Westinghouse Longitudinal Section	78
64.	" Transverse Section	79
65.	Willans Single-acting Section	80
66.	Rectangular Indicator-diagram	81
67.	Indicator-diagram with Expansion	82
68.	Condensing and Non-condensing Engine Diagram	86
69.	Condenser of River-boat Engine of Francis Skiddy	92
70.	Surface Condenser of Marine Engine	93
71.	Wheeler's Surface Condenser	94
72.	Fittings for Condenser-tubes	96
73.	Cold-well Surrounds Jet Condenser and Air-pump	98
74.	Worthington Self-cooling Condenser	100
75.	Blake Combined Air and Circulating Pump for U. S. S. Maine	103
76.	Ransom Gravity Condenser	106
77.	Bulkley Siphon Condenser, General	107
78.	" " " Section	108
79.	Worthington Ejector Condenser	109
80.	Ejector Condenser on Marine Engine	110
81.	Morton Ejector Condenser	111
82.	Schutte Ejector Condenser	112
83.	" " " Section	112
84.	" " " General	113
85.	Pump-condenser (Craig and Brevoort)	114
90.	Indicator-diagram with Early Cut-off	116
91.	Compound Beam Pumping-engine for Philadelphia Water-works by F. E. Graff	116 120
92.	Ball Tandem Compound	121
93.	Watertown Tandem Compound	122
94.	Porter Steeple Compound	123
95.	Cross Compound Engine (Houston, Stanwood & Gamble)	123
96.	Inclined Compound	126
97.	Indicator-diagram, Compound Engine	128

FIG.		PAGE
98.	Combined Indicator-diagram	129
99.	Triple-engine Diagram	130
105.	Arrangement of Cylinders of Triple Engine (Thurston)	132
106.	" " " " Quadruple Engine (Thurston)	133
107.	High-pressure Receiver, Worthington Pumping-engine	135
108.	Tandem Compound Pumping-engine (Worthington)	136
109.	Westinghouse Compound Engine	137
110.	Portable Engine (Hoadley)	145
111.	Throttling-engine Cards	147
112.	Cut-off-engine Cards	148
113.	Indicator-diagram with Loop	151
120.	Three-way Plug-cock	155
121.	" "	155
122.	Four-way Plug-cock	155
123.	" "	155
124.	Plain Slide-valve	157
125.	Slide-valve in Central Position	157
126.	Eccentric is a Crank	160
127.	Trammel	162
128.	B Valve	163
129.	Valve with Lap	164
130.	Valve with Lap Ready to Open	165
131.	Valve with Lead	168
132.	Valve-rod and Chest with Trammel	168
133.	Motion-curve with no Lap, not Lead	172
134.	Motion-curve with a Lap, not Lead	173
135.	Motion-curve with a Lap and Lead	174
136.	Motion-curve with Increase of Valve-travel	175
137.	Motion-curve, Method of Drawing Mechanically (from Forney)	176
138.	Polar Diagram with no Lap	177
139.	Polar Diagram with Lap	177
140.	Polar Diagram with Lap and Lead	179
141.	Design of Valve and Seat	180
142.	Design of Diagram when Lap is to be Found	182
143.	Design of Diagram when Cut-off is to be One Half Stroke	183
144.	Meyer Riding Cut-off	185
145.	Two Valves in Two Chests	186
146.	Porter-Allen Cylinder	187
147.	Short-ported Valve-design	190
148.	Buckeye Valve-gear	191
149.	Allen Valve	192
159.	Pressure-plate and Valve of Atlas Engine	197
160.	Gridiron Slide-valve	193
161.	Multiported Valve-seat, Worthington Pump	193
162.	Double Piston-valve, Mead & Dick Engine	195
163.	Piston-valve (Armington & Sims)	196
164.	Fixed Pressure-plate, Richardson Balanced Locomotive Valve	198
165.	Pressure-plate Balance of Woodbury Engine	199

FIG.		PAGE
166.	Porter's Pressure-plate	200
167.	Sweet's Pressure-plate	201
168.	Relief-ring for Valves	201
169.	Giddings Valve and Internal Steam	202
170.	Poppet-valve and Chest of Francis Skiddy	203
171.	Outside Cam Valve-gear	204
172.	Part of Western River-steamboat Valve-gear	205
173.	Part of River Valve-gear	205
174.	Cam of Varied Face	206
175.	Winans Locomotive Cam	206
176.	Porter Lever-cam	208
177.	Part of Western River Cam-gear	209
180.	Trip-motion of Greene Valve-gear	211
181.	Plug-valve in Corliss Cylinder	212
182.	Fishkill Landing Corliss Engine	213
183.	Payne Corliss Engine	217
184.	Bates Corliss Engine	218
185.	Steam-thrown Valve of Babcock & Wilcox Engine	219
186.	Gab-hooks	222
187.	V Hook	223
188.	Stephenson Locomotive Link-motion from P. R. R.	222
189.	Skeleton of Stephenson Link-motion	225
190.	Gooch Link-motion	227
191.	Joy Valve-gear, Marine	229
192.	Joy Valve-gear Diagram	229
193.	Joy Valve-gear, Stationary	230
194.	Walschaert or Hensinger von Waldegg Valve-gear	231
195.	Marshall Valve-gear	232
196.	Allen Link	237
197.	Meyer Valve-gear	237
198.	Watertown Trapezoidal Ports	234
199.	Rider Cut-off Valve	238
200.	Sliding Valve-seat under Valve	239
205.	Skeletons of Governor Mechanisms	245
206.	Diagrams for Spindle-governors	246
207.	Twiss Engine with Loaded Porter Governor	248
208.	Steinlen Approximate Parabolic Governor	251
209.	Buss Governor	252
210.	Babcock & Wilcox Governor	252
211.	Pickering Governor	253
212.	Waters Governor	253
213.	Gardner & Wright Spring-governors	254
214.	Armington & Sims Shaft-governor	255
215.	Mead & Dick Shaft-governor	257–8
216.	McEwen Inertia Shaft-governor	259
217.	Parabolic and Crossed-arm Governor Diagram	259
218.	Resistance-governors	261
219.	Fuller Marine Governor	264

FIG.		PAGE
225.	Tank Bed-plate of Watertown Engine	267
226.	Corliss Bed-plate of Wetherill Engine	268
227.	Section of Bed-plate of Lane & Bodley Engine	269
228.	Tangye or Buckeye Engine Bed-plate	270
229.	Straight-line Engine Bed-plate	272
230.	Bates-Corliss Foundation for Tandem Engine	277
231.	Foundation-template	279
232.	Shaft-bearing Adjustments (Lane & Bodley)	285
233.	Westinghouse Relief-valves, Ide Breaking Cap and Marine Relief-valve	291
234.	Joints for Steam-jackets	293
235.	Box-piston from Locomotive Practice	294
236.	Baldwin Locomotive Piston	295
237.	Plate-piston from Locomotive Practice	296
238.	Joints for Piston Packing-rings	298
239.	Durfee's Piston of Wyandotte Engine	300
240.	Steam-packing for Plate-pistons	301
245.	Jerome Metallic Packing for Rods	307
246.	Katzenstein's Metallic Packing for Rods	308
247.	Johns Metallic Packing for Rods	309
260.	One-guide or Bogie Locomotive Cross-head	312
261.	Slipper Cross-head and Guide, Straight-line Engine	313
262.	Lane & Bodley Cross-head	315
263.	Ide Engine Cross-head	316
264.	Bates Engine Cross-head	316
266.	Woodbury Engine Cross-head	318
270.	Bates Engine Connecting-rod	322
271.	Closed Stub of Lane & Bodley Connecting-rod	324
272.	Stub End of Woodbury Connecting-rod	325
273.	Stub End of Mattes Connecting-rod	326
274.	Hunt Ball Stub End	326
280.	Shaft, Overhanging, for Cross Compound	330
281.	Shaft with Three-throw Crank	330
282.	Crank of Cast Iron	331
283.	Crank of Steel with Cast Counterbalance, Case Engine	332
284.	Crank Counterbalance Disk, Skinner Engine	333
285.	Crank-shaft Built up, S. S. Rome and Alaska	334
286.	Thrust and Propeller Sections of Marine-engine Shaft	336
287.	Stern Bearing for Marine-engine Shaft	338
288.	Bates Engine Crank bearing and Bed-plate	339
289.	Eccentric and Strap	340
290.	" " "	341
291.	Fly-wheel Design (Busbridge)	347
292.	Fly-wheel Design, Leavitt's Boston Sewage Pumping-engine	347
300.	Slip and Corrugated Expansion-joint	354
301.	Flange Expansion-joint	355
302.	Hartford Pipe-hanger	356
303.	Hartford Side Outlet from Pipe or Drum	357

FIG.		PAGE
304.	Albany Steam-trap	358
305.	Centrifugal Separator and Water-pocket	359
306.	Receiver Separator	360
307.	Mosher Separator	361
308.	Westinghouse Steam-loop	361
309.	Spiral Riveted Pipe	364
310.	Various Exhaust-heads	365
311.	Edminston Oil-filter	366
312.	Oil-separators	367
313.	"	367
318.	Curving Rolls	382
319.	Curving Rolls, Acting of	383
320.	Curving Roll (Sellers)	383
321.	Erie City Boiler	384
322.	Flanging Press	386
323.	Flexure of Lap-joint	390
324.	Punch for Plate (Hilles & Jones)	391
325.	Punch and Die	392
326.	Punch (Kennedy's)	392
327.	Half-blind Hole	393
329.	Steam-riveter (Sellers)	396
330.	Hydraulic Riveter (Sellers)	397
331.	Forms of Rivets	400
332.	Lap-joint, Single Rivet	401
333.	" " "	402
334.	Lap-joint, Triple	402
336.	Flexure of Single Lap	403
337.	Lap-joint and One Cover	403
338.	Double Butt-joint	404
339.	Double-butt Rivet-joint (Leavitt)	405
340.	Failures of Rivet-joint	405
341.	Corrugated-flue Furnace with Combustion-chamber and Through-stay, U. S. S. Yorktown	405 409
342.	Stay-bars for Heads (Hartford)	409
343.	Stays for Heads (Hartford)	410
344.	" " " "	411
345.	" " " "	411
346.	" " " "	412
347.	" " " "	413
348.	Locomotive Fire-box Stays (Baldwin)	415
349.	Locomotive Fire-box Stays (Belpaire)	415
350.	Lukens Manhole	417
351.	Manhole Seating, Hartford	418
352.	" " "	419
353.	Scheme of Diagonal Brace, Hartford	414
354.	Edge-planing Machine (Hilles & Jones)	420
355.	Connery Concave Calking	420

FIG.		PAGE
360.	Old Wagon-boiler, Watt's Type	423
361.	Plain Cylinder-boiler	424
362.	Plain Dome, Hartford	426
363.	Reinforced Dome, Hartford	427
364.	" " "	428
365.	Dome with Neck to Boiler	429
366.	" " " " "	429
367.	Boiler with Transverse Drum or Pipe	430
368.	Boiler with Perforated Dry Pipe	431
369.	Dome with Stays	432
370.	Elephant or Union Boiler (Holley)	435
371.	French or Double Boiler	436
372.	Weimer Long Blast-furnace Elephant Boiler	436
373.	Circulation in Drum-boiler (Hartford)	437
374.	Bump-joint for Flues	439
375.	Rand Two-flue Boiler	443
376.	T-iron Ring	441
377.	Angle-iron Ring	442
378.	Adamson Loop-ring	442
379.	Six-inch Flue-boiler (H. S. & G.)	440
380.	Serve-tube	446
381.	Lip or Tit Drills	446
382.	Tube-expanders	447
383.	Expanded Tube	448
384.	Steam-chimney for a Marine Boiler	478
385.	Wharton-Harrison Sectional Boiler	456
386.	Harrison Details	457
387.	Stirling Boiler	458
388.	Cahall Boiler	459
389.	Babcock & Wilcox (Longitudinal Section) Boiler	461
390.	Root Boiler	462
391.	Heine Boiler	467
392.	Babcock & Wilcox Detail	465
393.	" " " "	465
394.	Root Detail	466
395.	" "	463
396.	Detail of Zell Sectional Boiler	463
397.	Allen Inclined-tube Boiler	468
398.	Silsbe Boiler	469
399.	Cornish Boiler	473
400.	Lancashire Boiler	474
401.	Strong Breeches Boiler	475
402.	Galloway Boiler	475
403.	Marine Three-furnace Boiler	476
404.	" " "	477
405.	Corrugated Flue	479
406.	Scotch Drum Marine Boiler with Two Furnaces	479

FIG. PAGE
407. Boiler of Ferry-boat Bergen ... 479
408. Marine Boilers, Fire-tube ... 480
409. Marine Boilers, Water-tube ... 480
410. Boiler of Ferry-boat Orange ... 481
411. Wagon-top Structure for Locomotive Boiler ... 483
412. Locomotive Boiler, Union Pacific Railway ... 484
413. Holley Locomotive Boiler ... 485
414. Wootton Fire-box Boiler ... 485
415. " " " ... 487
416. Monarch Boiler ... 488
417. Economic Boiler, Side Section ... 490
418. Upright Boiler ... 491
419. Manning Upright Boiler ... 491
420. Upright Boiler with Submerged Tubes ... 493
421. Corliss Boiler ... 494
422. Reynolds Arrangement of Tubes ... 495
423. Fire-engine Boiler ... 496
424. " " ... 497
425. Almy Boiler ... 499
426. " " ... 500
427. Thornycroft Boiler ... 501
428. Ward's Boiler ... 501
429. Herreshoff Boiler ... 502
430. Locomotive Fire-box with Fire-brick Arch ... 486
431. Holley Boiler-setting, showing Mud-drum ... 438
432. Louisville & Nashville Locomotive-boiler ... 489
433. Beach Water-leg, Front ... 516
436. Newark Hewes & Phillips Setting ... 506
437. " " " " ... 507
438. Hanging by Eyes ... 509
439. Long Boiler cut in Two (Durfee) ... 510
440. Rand ... 512
441. " Boiler-front ... 514
442. Rand Setting ... 515
443. Houston, Stanwood & Gamble Half-front ... 517
444. Hartford Setting ... 519
445. Baldwin ... 522
446. " Setting ... 523
447. Typical Grate-bar ... 524
448. Ætna Grate ... 525
449. Dumping-grate ... 526
450. Step-grate ... 528
451. Coxe Travelling-grate ... 530
452. Babcock & Wilcox Stoker ... 531
453. Wilkinson Stoker ... 532
454. Roney Stoker ... 533
455. American Stoker ... 534

FIG.		PAGE
456.	Side View Hartford Setting	535
457.	Side View Sterling Setting	536
458.	End View Sterling Setting	538
459.	Fishkill Landing Extended Front	539
460.	Hartford Plan-view of Setting	540
461.	Stanwood Half-front	541
462.	Jarvis Furnace	542
463.	Pittsburgh Two-flue Boiler	544
464.	Uptake Flues of Sheet Iron	547
465.	Damper-regulator	549
466.	"	550
467.	Chimney-stack	552
468.	"	552
469.	Externally-fired Galloway Boiler	572
470.	Hawley Down-draft Furnace	575
471.	Marden Down-draft Furnace	576
472.	Diaphragm-gauge	579
473.	Bourdon Gauge	580
474.	Crosby Gauge	580
475.	Gauge-siphon	581
476.	Gauge-glass and Boiler-front	584
477.	Column-pipe	584
478.	Safety Gauge-glass	585
479.	English Gauge-glass	586
480.	Weighted Gauge-cock, Fairbanks' Duplex	588
481.	Mississippi, American and Regester Gauge-cock	588
482.	Fusible Plug	590
483.	Feed-pipe partly closed with Scale	592
484.	Check-valves	594
485.	"	594
486.	Blake Pump	597
487.	Injector Principle (Forney)	599
488.	Injector, Sellers, of 1876	601
489.	Injector, Schutte	601
490.	Hoppe's Feed-water Heater	603
491.	Tubular Feed-water Heaters	604
492.	" " "	606–7
493.	Economizer, Greene's Type	608
494.	Safety-valve, Lever Type	613
495.	Pop Safety-valve	614
496.	Brush and Scrapers for Tubes	619
497.	Jet Cleaner	620
498.	Babcock & Wilcox	627
499.	Victor Filter	628
500.	Grooved Plate	631
501.	Grooved Plate	631
502.	Cylinder and 1 cubic foot of water	643

FIG. PAGE
503. Cylinder Oil-pump 650
504. Pipe-lubricators. 651
505. Sight-feed Oil-cup 653
506. Crank-pin Lubricator..... 654
507. Webbing-surface for Lubricator..... 654
508. Grease-cups..... 655
509. Zeuner's Deduction of Formula..... 683
510. " " " " 685
511. Deduction of Bursting-pressure of Cylinders..... 689
512. " " " " " " 689

THE MECHANICAL ENGINEERING

OF

POWER PLANTS.

CHAPTER I.

INTRODUCTORY.

1. **Sources of Motor Energy.**—There are three great sources of force for industrial uses. The first to be applied is the muscular force of men and animals. The second is the force called the force of gravity by which the earth attracts all masses towards its centre. The third is the group of forces which are due to chemical combinations; the two most important of these are the forces of heat and electricity.

It is obvious that these latter or the chemical forces are by far the most important. The reasons for this are, first that the muscular force in men or animals is naturally limited by the capacity of the units and by their endurance. There is furthermore no considerable reserve store of energy in each unit to be drawn on if more is required. The force of gravity becomes available as a motor force when a weight or mass is lifted to a higher level and is permitted to descend to a lower one. Solid weights are only of service when lifted by some other mechanical force; the only weights which are otherwise lifted to high levels independent of man are air and water. The latter is lifted by the sun in evaporation to high levels of

land, and the winds are produced when colder and heavier air descends and displaces the lighter warmed air. It would appear from this that all water-motors and windmills are really heat-motors in the last reduction. Gravity, therefore, as a motor force is dependent upon the availability of higher levels at which a mass of water can be accumulated, and an adequate reservoir in any particular region or an adequate flow from a source is a necessary condition for the use of water-motors; and while there is an abundance of energy present in the atmospheric ocean at the bottom of which all industry is carried on, the reliability, controllability, and capacity which must belong to the satisfactory working of a motor are lacking to windmills in most places where continuous service is required.

The energy resident in coal or other fuel and to be liberated as heat upon combustion is not subject to this class of limitations. An enormous capacity for doing work is stored in a very compact bulk: it is liberated from the fuel gradually as required, and yet the limits of available quantity have never been reached. It is to be had in very nearly all regions, and where it is not native it can be easily transported. If desired, the energy resident in it can be transported in the form of gas from a native spot through pipes to the place where it is required. As the engine is to be treated as a device for rendering available the potential energy present in fuels, and which when liberated from the fuel appears so conveniently in the form of an elastic tension of steam-gas, it becomes at once apparent why the steam-engine has received the development and distribution which has made it a primary factor of modern civilization.

While every one considers that the near future is to reveal a method for generating or liberating energy directly from fuel in the form of electromotive force, and this is now done by the chemical actions in various electric batteries, the importance and extent of this development at this writing remove it from the category of the large-scale installations such as are at present under consideration, and for many uses present methods are likely to prevail even in such future.

2. Analysis of Development in a Power Plant.—In the power plant which is to be considered as a typical example the steps or succession of events may be considered to be five. First there is the generation or liberation of the stored or accumulated energy. In a steam-power plant this process occurs in the furnace or fire-box of the boiler. Second, the storage or accumulation of the energy of heat thus liberated from the fuel in a suitable vessel or reservoir from which it may be drawn off as required. This is the boiler. Third, the appliance whereby the energy stored in the boiler as potential energy is transformed into actual energy by being made to exert force through a prescribed path under the control of capable intelligence. This is the engine. Fourth, the controlled force acting through the controlled space or path is to be transmitted from the engine or prime mover to the machine or apparatus which is to be driven. This gives rise to mechanism and transmissive machinery. Fifth, the industrial work of manufacturing, propelling, or whatever may be the function of the generated power, is the last link in the chain.

It is obvious that the last link in the chain is as extensive as the entire field of industry; and the transmission of power is itself a subject of sufficient importance in its various fields of electrical transmission, compressed air, high-pressure water, shafting, belting, gearing, or linkage to make a department to be treated by itself. The steps of generation or liberation, the storage and the release and transformation of energy from the fuels which form the first three departments, are to form the subject of this treatise.

It will at once suggest itself that while these successive steps are present in all power plants, in some it may happen that more than one is taken at once. In water-power plants, the liberation or storage of energy is done for the engineer before his work begins. This is also true for the windwill motor. In the gas or hot-air or direct-combustion engine there is no storage step in the process, but the energy must be utilized as fast as it is released. On the other hand, for the gas-engine plant which produces its own gas there is a

step of accumulation of energy which is lacking when solid fuel is burned directly under the boiler.

3. **The Units of Output of a Power Plant.**—The product of a force expressed in units of weight or pressure acting through a space expressed in units of length gives the work done by a motor. If the units are pounds and feet, the work will be expressed in foot-pounds. If the units are the kilogram and the meter, the work is expressed in kilogrammeters. The foot-pound or the kilogrammeter being too small for convenient use, the term horse-power was early found useful to denote the capacity or delivery of work by motors. It was introduced by James Watt as early as 1775. The English or American horse-power is 33,000 foot-pounds exerted in one minute. The metric horse-power is 75 kilogrammeters per second or 4500 per minute. The following table shows the relations of certain of these units of work to each other:

Horse-power.	English. Foot-pounds per Minute.	French. Kilogrammeter per Minute.	Austrian. Foot-pounds per Minute.
English and American.	33,000	4,562.46	25,233.6
French.....	32,548.2	4,500	25,420.8
Austrian.....	33,034.2	4,567.14	25,800

The English H. P. is 1.01385 force de cheval.

The French force de cheval is 0.986337 English H. P.

The steam-engine being a heat-engine, it becomes easy to pass from the energy resident in a unit of heat to the horse-power. The historic experiments of Joule and the later determinations by Rowland and other physicists show that the work of a force in foot-pounds can be transformed into heat-units directly, in the relation that, according to Joule, 772 foot-pounds or, according to Rowland, 778 foot-pounds are the dynamic equivalent of one unit of heat. In metric units and the centigrade scale this corresponds to 428 kilogrammeters per degree centigrade. In electrical plants the unit of work is called the joule, which is practically equiva-

lent to the energy expended per second by the international ampere against an international ohm, and the unit of power is the watt, which is practically equivalent to the work done at the rate of one joule per second. The watt is $\frac{1}{746}$ of the energy in one horse-power, from which it results that one kilowatt is equivalent to 1.34 horse-power.

4. **Measurement of Output.**—Quantity of work in foot-pounds or other units delivered by a motor can be measured either by the work supplied to it or by the work delivered from it. The work delivered from it is often called the net or effective horse-power. As it is often measured experimentally by means of a dynamometer or brake whereby power is transmitted or absorbed, it is termed brake horse-power or dynamometer horse-power, which have the same meaning for these reasons.

The energy delivered to the steam-engine is usually measured by an instrument first devised by James Watt which is called the Indicator. The indicator is an apparatus whereby the pressure exerted on the piston of the steam-engine is measured or recorded at each point of the travel of such piston, and the mean pressure of the steam in the cylinder multiplied by the space through which it acts gives the energy supplied. This is usually called the indicated horse-power.

Nominal horse-power is an old term now properly disused, which was based on an untenable assumption that all engines of a given diameter of cylinder were of the same horse-power, whatever the pressures or speeds used.

5. **The Scheme of Classification.**—Inasmuch as the power plant is always designed by the engineer for the doing of a specified kind of work, the whole design of the plant for the liberation or storage of energy will be based upon the magnitude of that useful resistance to be overcome. For this reason and because there are advantages attaching to the study of the boiler after the student has become familiar with the engine, this latter course has been pursued in the arrangement of the chapters. The engine will first be studied; then the boiler and furnace; and the combined plant of engine and

boiler taken together will be studied last. The following system of classification will therefore be adopted

1. The Engine.
    - *a*. By Mechanism.
    - *b*. By Speed and Proportions of Cylinder.
    - *c*. By Use of Steam.
    - *d*. By Method of Control.
    - *e*. Construction and Assembling of Engines.
    - *f*. Piping and Steam Appliances.
2. The Boiler.
    - *a*. Types.
    - *b*. Construction of a Typical Form.
    - *c*. Setting and Accessories.
    - *d*. Wear, Tear, Deterioration, and Repairs.
    - *e*. Testing for Strength; Explosions.
3. Plant, Engine, and Boiler.
    - *a*. Care and Management.
    - *b*. Testing for Efficiency.
    - *c*. Location and Arrangement of Plant.

CHAPTER II.

THE MECHANISM OF ENGINES.

6. The Horse-power of a Cylinder.—It has been found most convenient to transfer the potential energy of steam-gas under pressure into actual energy in foot-pounds by causing the pressure of the steam to move a disk or piston back and forth in a cylinder in which it fits tightly enough to prevent escape of the steam. The cylinder is usually circular in cross-section. It is obvious that if the pressure of the steam-gas be denoted by the letter P in pounds per square inch of area, and the area of the piston be denoted by the letter A, the total pressure of pounds which moves that piston in this cylinder will be represented by the product PA.

The traverse or movement of the piston in a cylinder cannot be continuous in one direction unless the cylinder be of infinite length. The motion of the resistance will usually be continuous in the same direction, while the motion of the piston receiving the effort must be an alternating back-and-forth motion—called a reciprocating motion—and a proper mechanism must connect the two ends and transform the motion of the piston into the continuous motion required for the resistance. This necessity compels the design of those mechanisms of engine which experience has shown to be the most usual and convenient.

If the traverse or movement of the piston be represented by the letter L expressed in feet, and the letter N denote the number of times per minute which the piston traverses the length L, the product LN will represent the number of feet per minute through which the total force denoted by PA has

been moved. The work per minute done by such a cylinder will therefore be expressed by the equation of the form

$$W = PALN$$

in the compound unit foot-pounds. Since there are 33,000 foot-pounds in one horse-power, if both members of this equation be divided by 33,000 the equation appears in the form

$$\text{H. P.} = \frac{PALN}{33{,}000}.$$

It is to be noted that, while A is in inches and L is in feet, this causes no confusion in the multiplication. The numerator of the fraction is often written $PLAN$, as being more easily remembered.

Since A is the area of the base of the cylinder inside and L is its altitude, then LA is the volume of the cylinder. That volume is filled N times per minute; whence it follows that $PLAN$ may be written PV, in which V denotes the volume of steam-gas furnished to the engine-cylinder if the pressure P is uniform and constant at all instants of the minute. If P varies from the constant pressure prevailing in the boiler or reservoir of pressure, as it usually does, the value for P must be the value for the mean pressure, ascertained by calculation or by experiment.

7. **Horse-power of the Resistance.**—The useful resistance or the work to be done by an engine is also given or measured by the foot-pound unit. If the useful resistance is the lifting of weights, as in hoisting or in pumping, or if it is the moving of masses without lifting, as in propulsion in water or on level land, the determination of the foot-pounds is obvious. But in the cases where the continuous motion, (as is usual in factory practice and in much of power-plant practice), is taken from the circumference of a revolving wheel or drum, the foot-pounds are found directly by multiplying the speed in feet per minute at the circumference of such a wheel by the effort or pull expressed in pounds which is exerted at such circumference.

8. Transformation of the Horse-power Formula.—It will be apparent that the horse-power of a cylinder motor will increase with the pressure, with the diameter of the cylinder, with the length of the cylinder, and with the number of reciprocations of the piston.

In an engine once constructed A and L are fixed or constant, and the factor 33,000 is constant. If then the initial K denote the fraction $\frac{AL}{33{,}000}$, the horse-power formula may be written

$$\text{H. P.} = PNK,$$

in which K may be called the engine-constant.

It will be further apparent, so far as the engine itself is concerned, that P and N can be increased, and with them the horse-power, without adding to the weight or bulk of the engine.

It is not necessary that the path traversed by the piston should be a straight line. It can move in any closed curve, the most frequent of such curves being the circle. This difference gives rise to the first great division of the steam-engine into classes. Where the piston travels back and forth in a cylinder with a straight axis the engine will be called a *reciprocating steam-engine*. This is by far the most usual type, for reasons which will appear. When the piston or area receiving the steam-pressure travels in a circular path continuously in the same direction the engine is called a *rotary steam-engine*. The advantages and disadvantages of the rotary will be discussed hereafter.

9. Essential Parts of a Reciprocating Steam-engine.—The condition referred to before (par. 6) for the transformation of the alternating or reciprocating translation of the piston into the continuous rotation of the engine-shaft in one direction has compelled the adoption of a mechanism or linkage for this purpose. To produce the rotation of the engine-shaft, the crank and connecting-rod is the almost universal device. The length of the traverse of the piston in the cylinder will

be twice the effective length of the crank: the length of the interior bore of the cylinder will therefore be twice the length of the crank, to which must be added the depth or length of the piston-disk in the direction of its motion, and the allowance for clearance at each end so that the piston shall not strike either head of the cylinder, and which shall permit the steam-pressure to get behind the piston when the latter is at the extremes of its motion.

The motion of the piston in the cylinder must be transmitted outside to the mechanism which is to transform the reciprocating to rotary motion in the open air. This is done by the piston-rod, whose length must be sufficient to permit the piston to return to the end furthest from the hole through which the rod protrudes without drawing the rod inside. The rod further must slide in and out of the cylinder-head without permitting leakage of steam or condensed water. The device designed for this purpose is called a stuffing-box, and the space for this stuffing-box adds something to the length of the rod.

The end of the piston-rod is connected to the pin of the crank by what is called the connecting-rod. In the locomotive it is sometimes called the main rod or driving-rod. The term pitman is properly restricted to the connecting-rod which couples the crank-pin to a vibrating beam; connecting-rod, however, is a general name. Its function is to provide for those components of the motion of the crank-pin for which the linear motion of the piston or its rod cannot provide, and for this reason it usually has a length from two and one-half to four times the length of the crank. When the crank has made a partial revolution it will be obvious that the thrust or pull of the connecting-rod transmitting the energy of the steam to the crank-pin will cause a cross-strain or bending effect upon the end of the piston-rod to which it is attached. This bending effect must be counteracted, since otherwise the hole for the piston-rod would wear out of round, whence leakage and other difficulties would ensue. Therefore the end of the piston-rod must be so guided that this shall be pre-

vented. This is done by fitting to the outer end of the piston-rod a block or head which is called the cross-head in America, and the motion-block in England. It is arranged so as to be guided by plane surfaces or bars which are called the guides. These should be carefully adjusted to lie in a plane or planes parallel to the axis of the cylinder.

The connecting-rod taking hold of the crank-pin causes the engine-shaft to revolve continuously in one direction in its bearings. It is usual to have the centre of these bearings in the same plane as the axis of the cylinder, although this is not an essential condition. On the engine-shaft will be the fly-wheel for regulating any variation of effort upon the crank-pin, and from this engine-shaft the power will be taken off, either by directly coupling the resistance to the shaft, as in steam dynamos, marine engines, rolling-mills and the like, or by belting or gearing from a wheel on the shaft or from the fly-wheel itself, as in usual factory practice. The valve-motion is usually driven from the shaft.

10. General Features of a Typical Mechanism.—While different types of engines are marked by differences in detail, Fig. 1 herewith will represent the appearance of a typical horizontal steam-engine. It will be observed that the essential organs of the mechanism enumerated in par. 9 are supported by a massive casting. This casting is called the engine-bed or bed-plate, and serves not only to keep the various organs of the engine in fixed relation to each other, and to prevent undesired motion, but also serves as a means of securing the moving parts to a suitable foundation so as to secure stability. The bed-plate represents the fixed link in a kinematic chain. In the locomotive engine the bed-plate function is discharged by the frame of the engine to which the hauling appliances of the draw-bar are fastened in order that the frame of the engine may haul the attached train. In marine practice the bed-plate of the engine is securely fastened to extra heavy frames of the hull, so that the propelling effort exerted by the screw and transmitted to these frames may push the vessel forward.

There are certain terms relating to the mechanism in

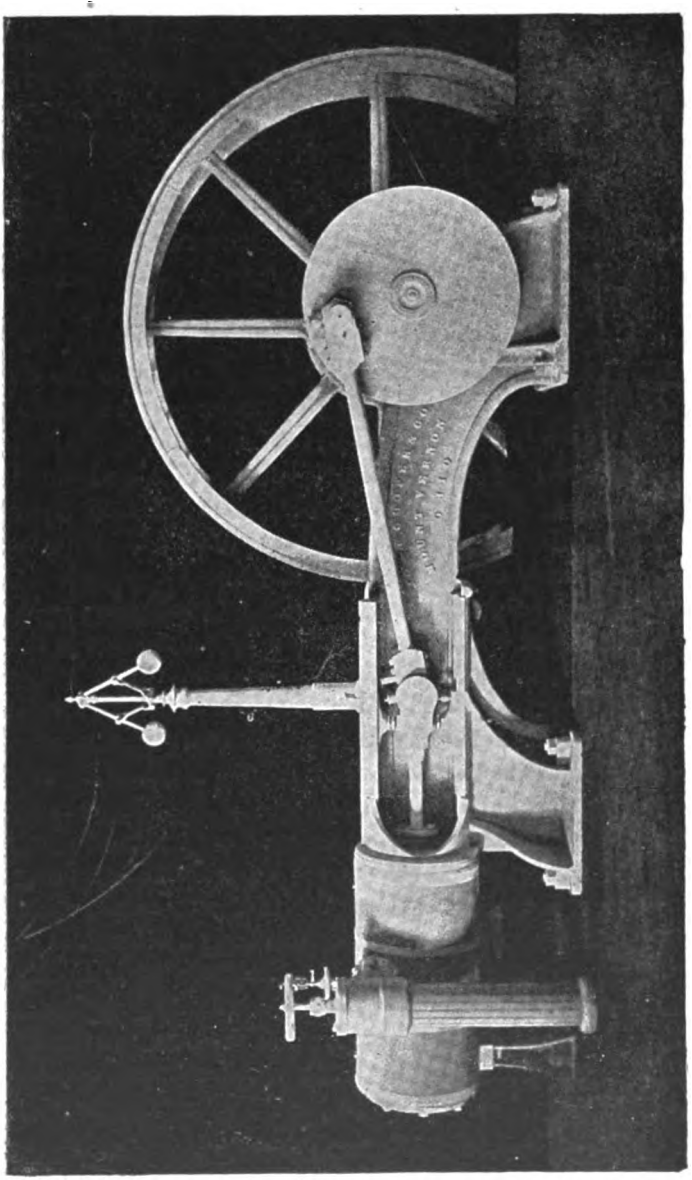

FIG. 1.

general to which attention should be called at this point. It will be noticed first that when the crank-pin lies in the line drawn through the axis of the cylinder, the pressure of the steam upon the piston produces no effect to cause rotation of the crank. When the crank is in this position the engine is said to be on its dead-centre, or simply on its centre. Most engines have also another centre, usually coincident with this or nearly so, when the openings admitting steam to the cylinder are closed at both ends of such cylinder by their respective valve or valves. Provision must be made in large engines to turn the shaft past such dead-centre if by mismanagement or accident it should become stopped there. Vertical engines are particularly liable to stop on the centre, and with the crank below the shaft. When the crank on the centre points towards the cylinder it is said to be on its inner centre. At 180° from this, or when the crank points away from the cylinder, it is said to be on its outer dead-centre.

The end of the cylinder which is towards the crank or shaft is usually called the crank end of the cylinder, and the end away from the crank is called the head end. It is sometimes convenient to have the power from the engine taken off from one or the other side of the vertical plane through the axis of the cylinder; this gives rise to such an arrangement of the mechanism upon the bed-plate as to cause engines to be known as right-hand or left-hand engines. A right-hand engine is one in which the shaft of the engine which carries the fly-wheel and driving mechanism is at the right hand of the observer as he stands at the head end of the cylinder (Fig. 2). While it is usual to have one end of the engine-shaft supported upon the bed-plate, and the other end upon a separate bearing which is usually called the outboard bearing (a term borrowed from the practice prevalent when paddle-wheels were universal in marine engines and the bearing of the shaft was supported by an exterior guard overhanging the water), yet very many designs, particularly for engines to be directly coupled to their resistance, have the engine-shaft driven by a double crank, whereby it is sup-

FIG. 2.

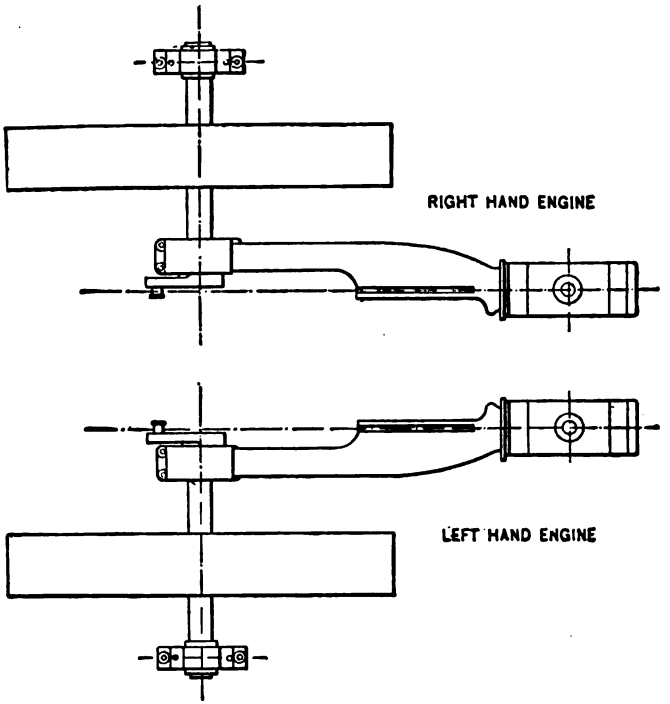
RIGHT HAND ENGINE
LEFT HAND ENGINE

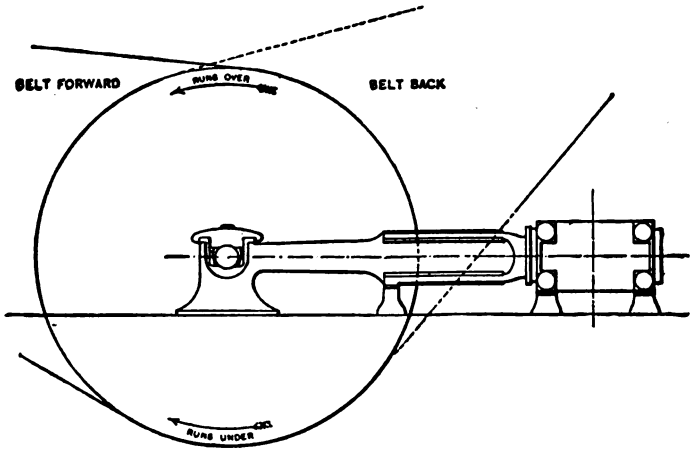
BELT FORWARD
RUNS OVER
BELT BACK
RUNS UNDER

FIG. 3.

ported by a bearing on each side of the bed-plate. Such engines are called centre-crank engines. The typical marine engines are of this construction. Fig. 1 will be called a side-crank engine.

An engine is said to throw over or under when the crank starting from its inner dead-centre rises above the axis line or descends below it upon the beginning of the stroke (Fig. 3). It is considered desirable to have an engine throw over when possible because the pressure due to the oblique direction of the connecting-rod is always downward both upon the pushing and the pulling stroke. This is of advantage, first because the pressure upon the guides is resisted by the bed-plate in the direction of its greatest stiffness, and secondly because the lubrication of the upper surface of the lower guide is more convenient than the lubrication of the under surface of the upper guide, which has the pressure when the engine throws under. In the locomotive where the cylinders are in front of the driving-wheels, the engine must always throw under in going forward.

The pressure on the guides due to the angularity of the connecting-rod diminishes as that connecting-rod becomes long in relation to the length of the crank. It has sometimes been urged against the connecting-rod as a device for transforming reciprocating into rotary motion, that it is wasteful and causes avoidable loss from friction. It can be proved that there is little in this argument, since an equality of work in the cylinder and at the crank will be secured by a less effort in pounds exerted at the latter point when the path of the latter is greater than that of the former. The condition of true harmonic motion for the piston is only secured when the connecting-rod is of infinite length. An equivalent for this condition is secured by using a yoke in the piston-rod whereby the pressure of the steam is always exerted upon the crank-pin in the direction parallel to the axis of the cylinder. This mechanism, shown in Fig. 4, has excessive friction near the dead-points, and is therefore used only where the rotating shaft has a regulating function merely and is intended to store up

energy for passing the centres while the main effort of the steam is transmitted through a continuous piston-rod, as in pumping, air-compressors and the like.

It will appear hereafter that one of the functions of the rotary fly-wheel is to carry the engine mechanism past the kinematic dead-centres and the dead-centres of the valve-motion. If there is no fly-wheel to compel this result it must be secured by special arrangements, such as are features in duplex and other direct-acting steam-pumps.

The existence of a patent upon the crank and connecting-rod mechanism at the time of James Watt's first improvements

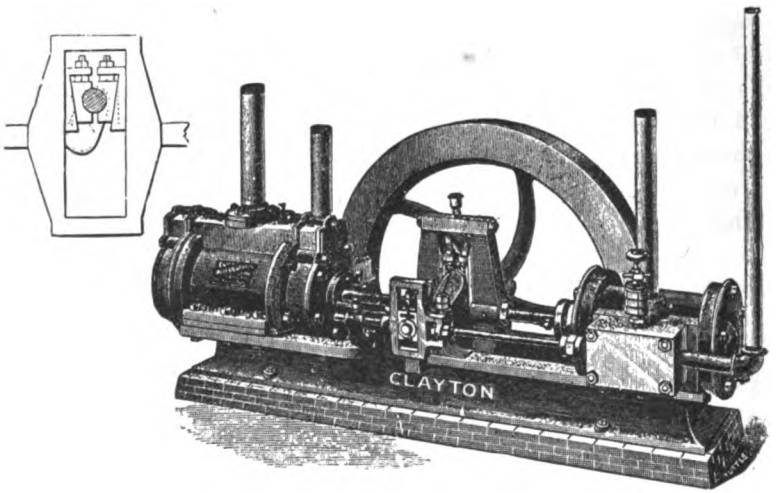

FIG. 4

in the steam-engine compelled him to the device which will be found in the very early examples of English engines whereby for one double stroke of the piston the engine-shaft made two or three revolutions. This result was obtained by attaching a gear-wheel to the connecting-rod which engaged with another upon the revolving shaft. As the fixed gear on the connecting-rod travelled around the gear on the shaft, the aggregate path of the latter was more than one revolution for one traverse of the piston. This gear was called the sun and planet motion,

but was discarded as soon as the right to use the crank became public property.

The typical engine shown in Fig. 1 has but a single piston traversing a single cylinder. It is thoroughly practical to use more than one cylinder, in which case it is desirable that the two cranks of the mechanism of the separate cylinders should make an angle with each other whereby the inequalities of the effort upon the shaft occurring with one cylinder shall be compensated by putting the cranks in such relation that one shall be at its position of best advantage when the other is working with least effect. In two-cylinder engines this is secured by putting the cranks a quadrant apart, or quartering. This is universal in locomotive-engine practice. When there are three cylinders, they will be put at 120° with each other.

11. **Length of the Typical Reciprocating Engine.**—If the typical engine represented in Fig. 1 be supposed to have the connecting-rod of three times the length of the crank and be supposed to be turned so that the crank stands upon its outer dead-centre, it will appear that the length between the head end and the crank-pin of such engine is made of the following units:

1. Cylinder, two cranks.
2. Piston-rod, two cranks.
3. Connecting-rod, three cranks.
4. Allowances for stuffing-box, cylinder-heads, metal in piston, cross-head, etc.

Total. Something over seven cranks in length.

The exigencies which are imposed by the contracted space in vessels where the location and direction of the engine-shafts are fixed by the propelling mechanism outside of the hull have compelled the designers of engines for this condition to modify the typical mechanism to suit their particular need. These designs have but a limited application on land, where these conditions of restricted room are not felt.

12. **The Oscillating Engine.**—If the connecting-rod of the typical mechanism be suppressed, the length of the engine becomes only four cranks and allowances. The motion of the

crank in the direction of the sines of the crank-angles requires to be provided for while the piston-rod slides in and out in the straight line through the stuffing-box. This compels the axis of the cylinder to change its direction continually in order that the piston-rod may always point towards the crank-pin, and therefore the cylinder must be so mounted upon suitable trunnions or pivots as to adjust itself accordingly. These trunnions should be constructed upon the axis through the centre of gravity of the cylinder, but in small engines they may be a part of the head end. The steam from the boiler usually enters the cylinder through the trunnion on one side and leaves it as exhaust steam through the other (Fig. 5). It is quite possible, however, to have both admission and exhaust functions in one trunnion.

This design has received its widest application for the driving of paddle-wheels of side-wheel steamers, where it is desirable to economize room and to bring the weight of the cylinder as low down as possible. The height of the shaft above the water is fixed by the diameter of the wheel, and the slow speed of rotation compels a long stroke if the pistons are to travel a considerable number of feet per minute. The objections to this mechanism are, first, the power required to start and accelerate and to stop so great a mass as the cylinder of a large engine twice in a revolution; second, the friction entailed by the motion of such heavy parts which do not move in the typical engine; third, the tendency of the trunnions to wear out of round and cause the steam connections to leak; fourth, the tendency of the stuffing-box through which the rod protrudes and upon which the cross-strain is continuously acting to wear out of round and to leak.

They make, however, a compact and somewhat cheap engine in their smallest sizes. They have been used in such sizes to enable the designer to secure very light weight in the reciprocating mechanism, so that very high rotative speed is permissible without very high steam-pressure. Fig. 6 shows how little mass can be demanded in such a design. A skeleton diagram, Fig. 7, shows also the use of a very long

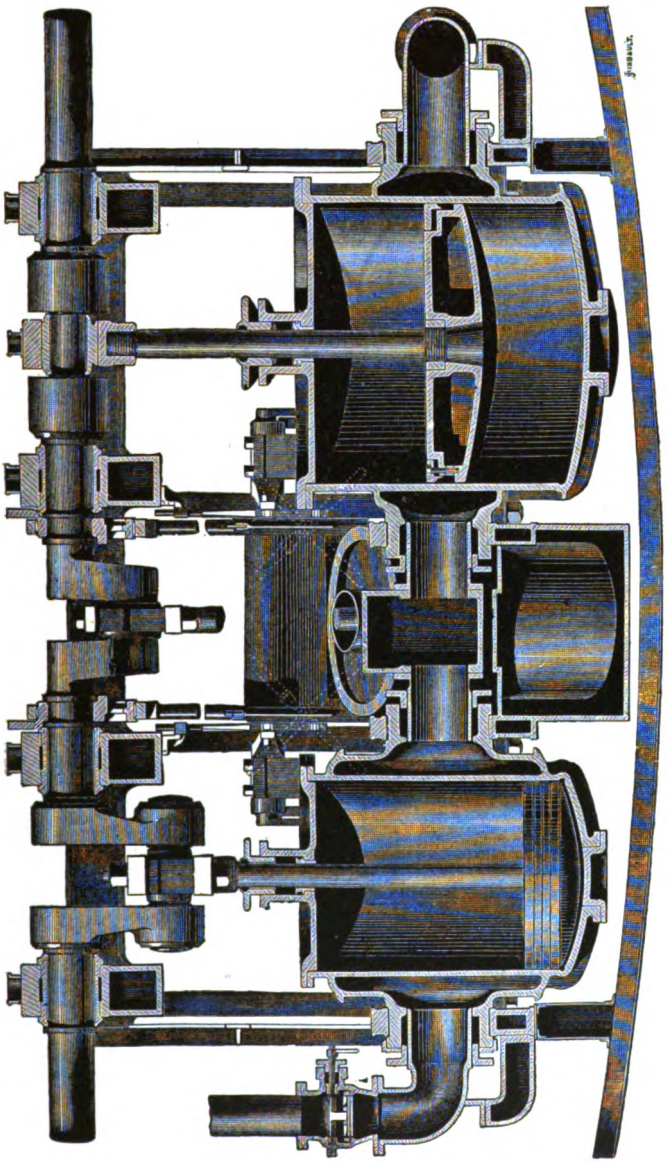

FIG. 5.

stuffing-box connection to give leverage to the oscillating cylinder

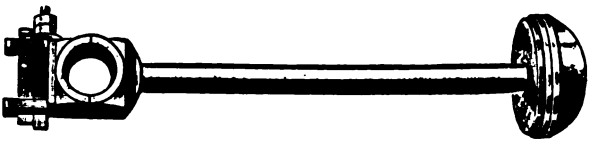

FIG. 6.

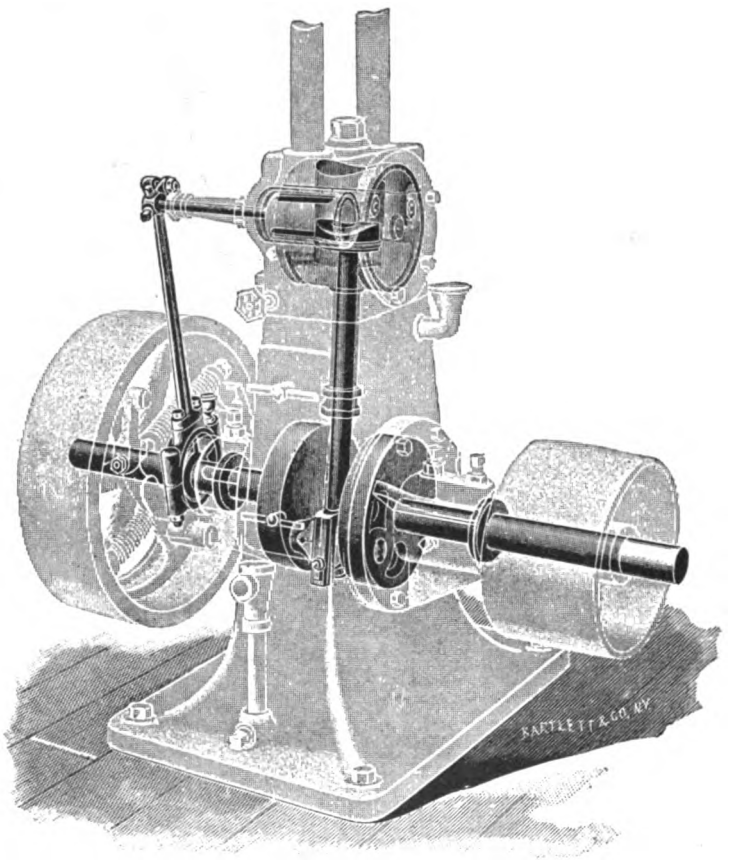

FIG. 7

13. The Trunk-engine.—If the piston-rod of a typical engine with the cross-head at its end be reduced to a point,

while the connecting-rod is retained, the engine is shortened by the length of two cranks and the stuffing-box allowances, and the pin upon which the connecting-rod has its vibratory motion becomes attached directly to the piston-disk. The

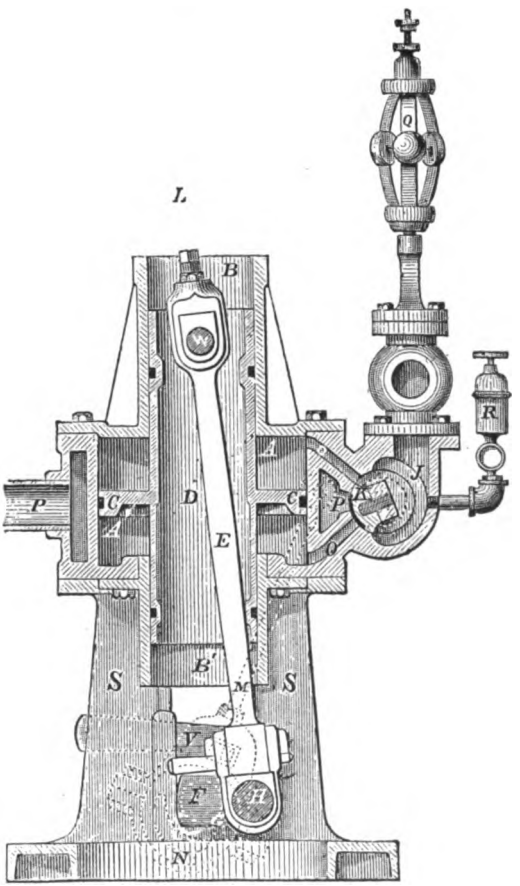

FIG. 8

vibration of the connecting-rod from its connection with the crank-pin must be permitted through the crank end of the cylinder, and at the same time this orifice must be so constructed that it can be kept steam-tight. This difficulty has been solved by attaching to the piston a hollow cylinder or

trunk whose diameter is sufficient to permit the angular motion of the connecting-rod to take place within it, while its exterior finished surface slides steam-tight through the usual stuffing-box construction. The trunk is thus like a hollow piston-rod except that the cross-head attachments are at its piston end, and it is under no pull and thrusting strain, but is simply a device to insure steam-tightness. Fig. 8 illustrates an engine of this type in cross-section, with the added peculiarity that

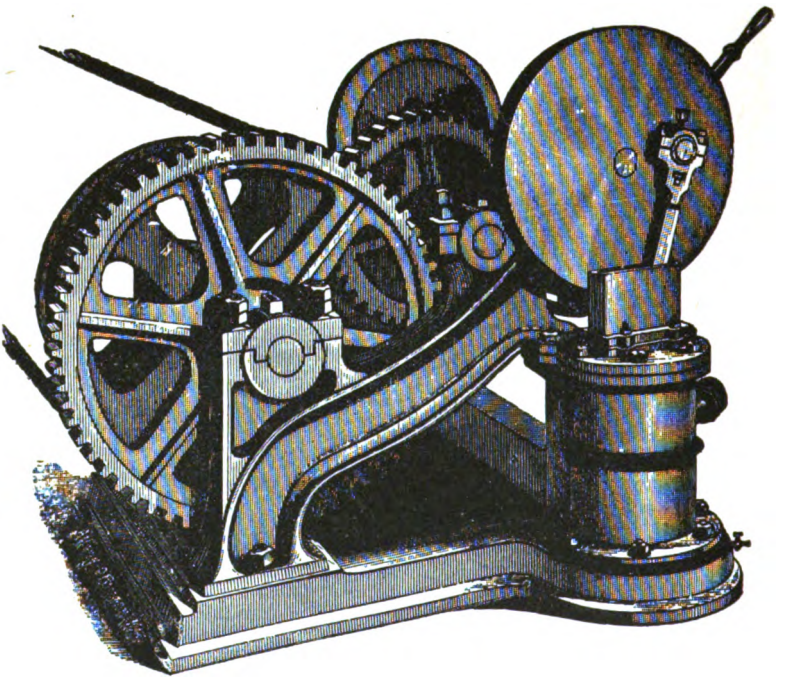

FIG. 9.

the attachment of the connecting-rod is behind the real piston (*C*) whereby more oblique action of the connecting-rod is secured. In this design the hollow trunk is carried through the head end of the cylinder, which has the effect of making the annular area of the piston the same above and below. Quite frequently the trunk behind or beyond the piston is left out, so that one stroke is more powerful than the other by reason

of the full area which receives pressure on one side and the annular area on the other. Such engines are often called half-trunk engines, and have been a favorite design for compact hoisting-engines (Fig. 9). These trunk-engines have been much used in marine practice for monitors and similar conditions where an engine was required to lie athwart ship and have but little vertical height (Fig. 10). The objection to them is the large diameter of the cylinder proper for any considerable power by reason of the loss of effective area entailed by the hollow trunk. It is usually more convenient to make the trunk cylindrical, but this is not necessary except for ease in packing the joint at the stuffing-box. The minimum section for the trunk would be an oval or rectangle with rounded ends (Fig. 9). As in the case of the oscillating engine, the trunk-engine is a cheap construction in its smaller sizes, and lends itself particularly well to designs where the pressure of the steam is to come on one side of the piston only, in what are called single-acting engines (see Fig. 64). The trunk serves also as a guide to the piston to prevent it from cocking or jamming from the oblique thrust of the connecting-rod when it has no guiding piston-rod.

14. **Back-acting Engine.**—In the typical mechanism of the steam-engine the connecting-rod and the cross-head with its guides come between the cylinder and the crank so that the piston-rod and connecting-rod are together in tension or in compression, according as the effort of the steam is pulling or pushing upon the crank-pin. It is easily possible to bend the connecting-rod backwards from the cross-head, so as to extend behind the end of the cylinder, which has hitherto been called the head end, and to locate the crank and engine-shaft thus behind the cylinder as it were. It is usually necessary where the shaft is behind the cylinder to make use of two connecting-rods from the cross-head to the crank-shaft, to prevent cross-bending strain upon the cross-head, since the cylinder itself is in the line of the axis of the effort. These two connecting-rods may go to independent crank-pins, or the two connecting-rods may join behind the cylinder to form one, which in the axis of the cylinder at the back will trans-

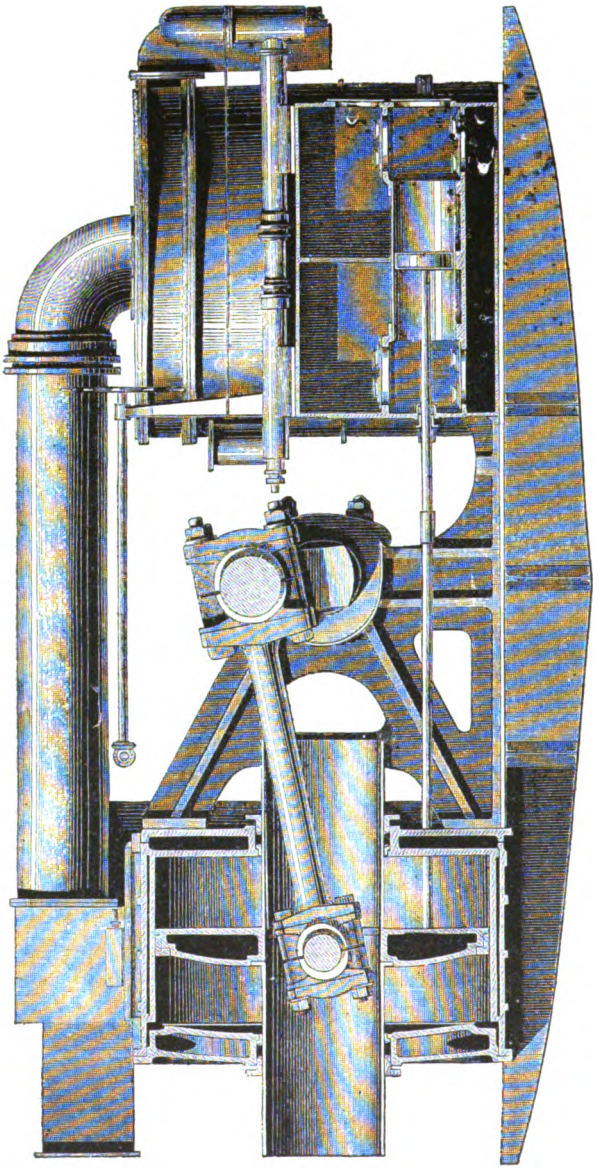

FIG. 10.—ENGINE OF H. M. S. BELLEROPHON.

mit the effort to a single pin. This type of design is by no means unusual for pumps, air-compressors, and blowing-

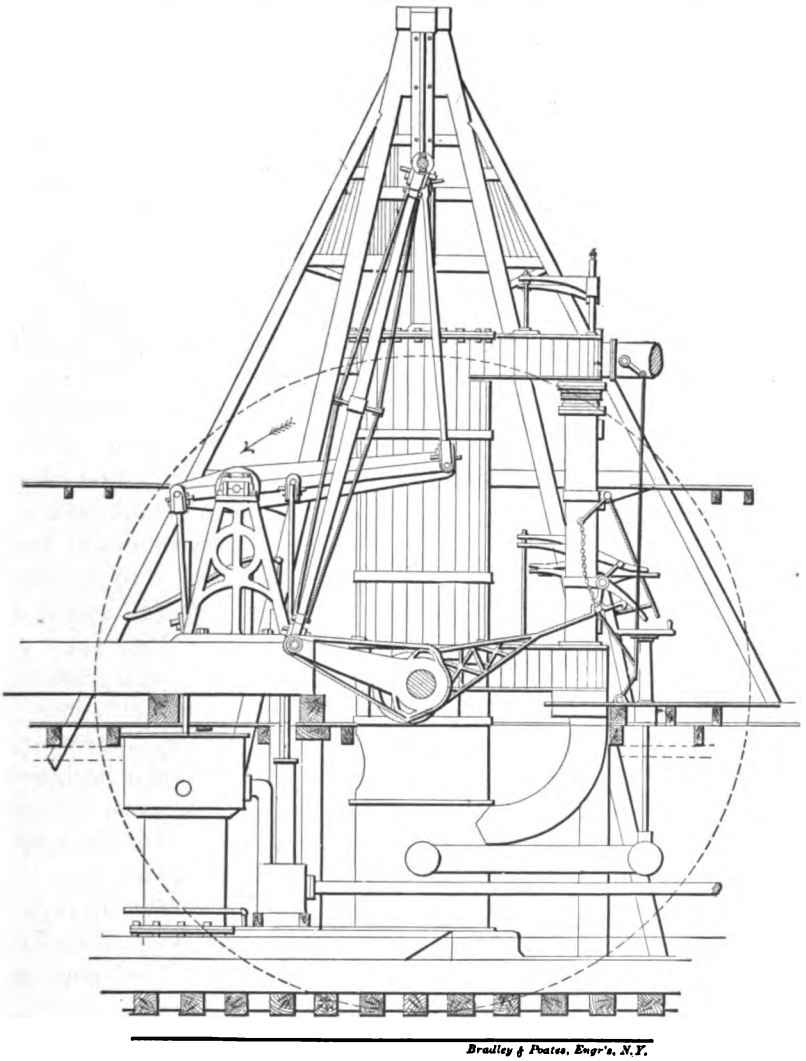

FIG. 11.

engines, but has ceased to be in as general use for other purposes as in the beginning of steam-navigation. Fig. 11

shows this mechanism as it is applied to a paddle-wheel steamer still in use for towing upon the Hudson River.

The more usual form in modern vessels of war is to have the crank-shaft in the axis of the horizontal cylinder and quite close to its crank end. Two piston-rods protrude through the crank end of the cylinder, separated from each other by such a distance that one passes on one side and the other upon the other side of the shaft, and are joined together to a common cross-head beyond the shaft and at a sufficient distance from it to allow the connecting-rod from that cross-head to lap back between the piston-rods and take hold upon the crank-pin in the plane between them and all in the axis of the cylinder or symmetrical to it. This may also be done by three or four piston-rods instead of two. Fig. 12 shows an engine of this latter sort. The typical length is obviously shortened in the first form by the length of the connecting-rod, and in its second form by the length of the piston-rod. In the first form the cylinder lies between the cross-head and the crank, and in the second form the crank lies between the cylinder and the cross-head. Many vertical blowing-engines belong to the first class so far as their steam part is concerned (Fig. 13), and also some of the types of horizontal air-compressors (Fig. 14).

15. Engines Classified by the Position of the Cylinder-axis.—The exigencies of location or use frequently determine, outside of any preference for one particular arrangement, whether an engine shall have the axis of its cylinder horizontal, vertical, or inclined. Three classes of engines result from these differences of the arrangement of the cylinder-axis, each of which offers advantages and disadvantages of its own.

16. The Horizontal Engine.—The horizontal arrangement of the cylinder-axis is by far the most usual position for factory or mill engines, and for power plants where room or floor-space is not the governing condition (Fig. 1).

The advantages of the horizontal arrangement are: First, convenience of access from the ground-level to every point of the engine mechanism. This is a convenience both in operation and in repair. Second, the weight of the engine is dis-

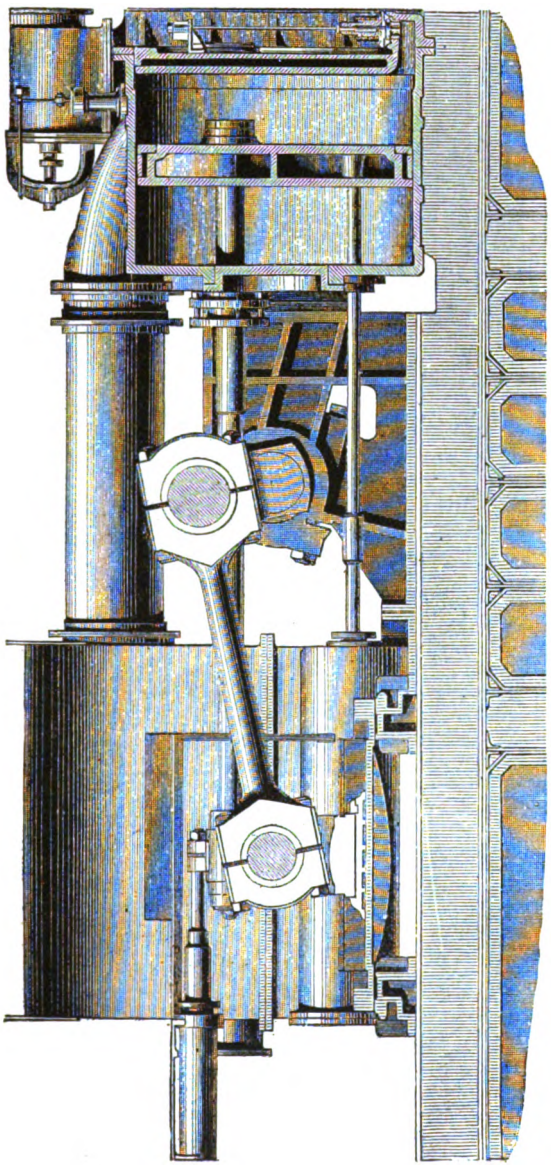

FIG. 12.—ENGINE OF H. M. S. AGINCOURT.

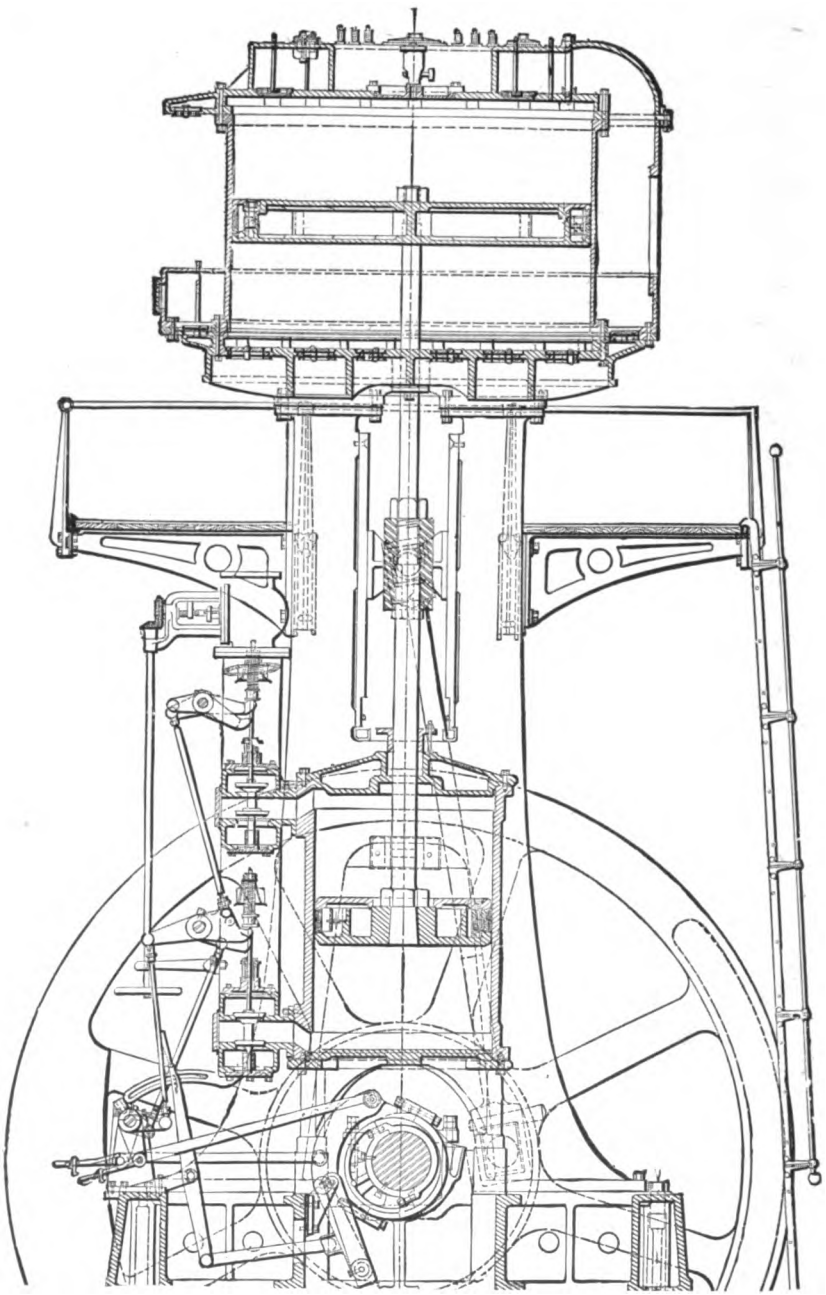

FIG. 13.

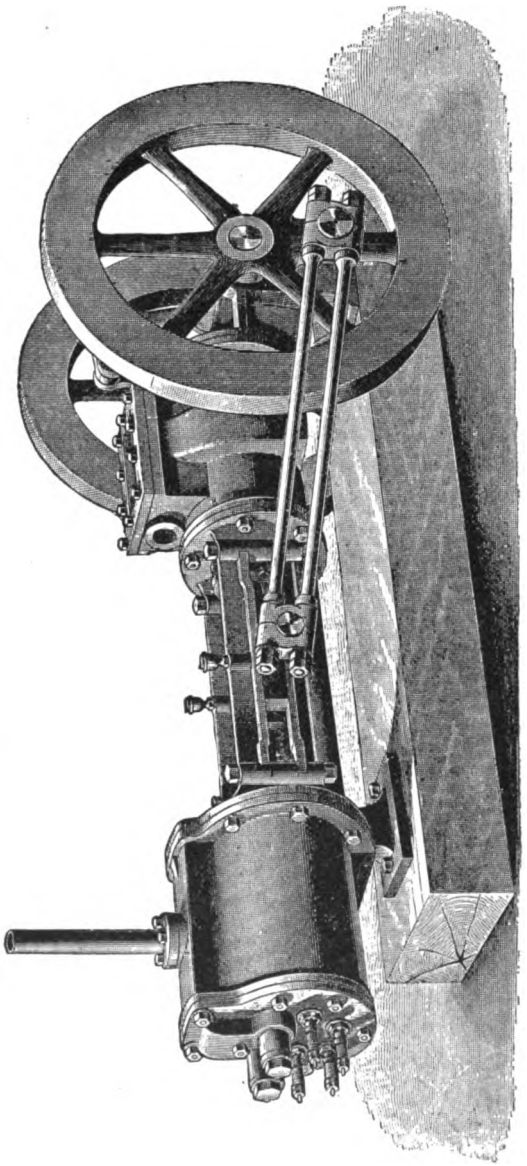

FIG. 14.

tributed over a large area for its support. This is of considerable moment where earth must be depended on to support the foundation, and becomes a critical condition of design for boat-engines, where the light draught imposed by shallow water compels a shallow and therefore flexible or deflecting hull structure. This is a notable peculiarity of the practice of engine design for the western rivers of America and for the shallow waters of the British Colonies. Third, the foundation itself does not require to be so massive to hold the engine still, and to keep its frame from jar or vibration. The first of these is usually considered the notable advantage of the horizontal engine.

The disadvantages of the horizontal engine are: First, that the action of gravity on all masses of the mechanism produces a friction which is absent in a vertical cylinder. The spring appliances of the piston which are intended to make it fit the bore steam-tight require to have strength sufficient to support the solid piston in the axis of the cylinder and prevent a wearing of the stuffing-box down on the lower side. The action of these springs increases the friction.

Secondly, due to either of these actions or to both, it is supposed there is an excess of wear on the bottom elements of the cylinder which causes the bore to wear oval with the long axis vertical.

While the tendency of horizontal cylinders to wear oval is undeniable, it is a fair question whether this may not be caused rather by the springing of the guides and a flexing of the frame than by the action of gravity upon the piston; and in many stationary engines bolted to foundations the change of shape due to expansion by heat not infrequently so deranges the alignment of the engine as to cause the cylinder to wear unequally. The tendency to wear is also diminished by having the area of contact between the piston and its bore large enough so that for a given weight of piston the pressure per unit of area becomes so far reduced as to make wear inappreciable. A great gain is further secured by so selecting the material for the cylinder-casting that it may resist wear by

abrasion. The difficulty from wearing is further diminished by the practice quite usual with heavy pistons of prolonging the piston-rod out through the back or head end through a stuffing-box. This not only supports the weight of piston, but serves to guide it effectively in the axis of the cylinder.

17. The Vertical Engine.—The advantages belonging to the vertical arrangement of the cylinder-axis are the avoidance of cylinder-friction and unequal wear, which are the disadvantages of the horizontal engine. But of more moment than these is the diminished area in ground-plan which is entailed when the length of the engine is up and down. This condition has made the vertical engine practically universal for screw-propelled ships which are not primarily war-vessels, and has given to this arrangement its wide distribution in crowded power plants in cities where ground is costly (Fig. 15).

The objections to the vertical engine are: First, the effort on the crank-pin is greater when the weight of the mechanism is acting downwards with gravity than it would naturally be when the effort of the steam has to lift the same weight against gravity upon the up-stroke. This must be counteracted, because otherwise the effort upon the pin, and therefore the speed, would be irregular. It can be done either by counterweighting the crank on the side opposite to the pin to which the reciprocating parts are attached, or by means of a steam-cylinder whose area shall be so calculated that the pressure of the steam shall just neutralize the weight to be overcome; or the distribution of steam to the heavy end of the cylinder can be adjusted so as to develop more effort at that end than at the other. The second difficulty is that in a large engine the different parts of the mechanism will be upon different levels or stories, increasing the number of men required to handle or superintend it. Third, the engine is not so completely and inflexibly secured to its foundation and a deeper foundation is thereby required, or an unequal settling of such foundation will occur, if the concentrated load is not sufficiently widely distributed. Fourth, when the piston-rod protrudes from the bottom head of such vertical cylinder the combined effect of

capillary action and gravity upon the condensation which takes place around the rod in the stuffing-box and upon the cover

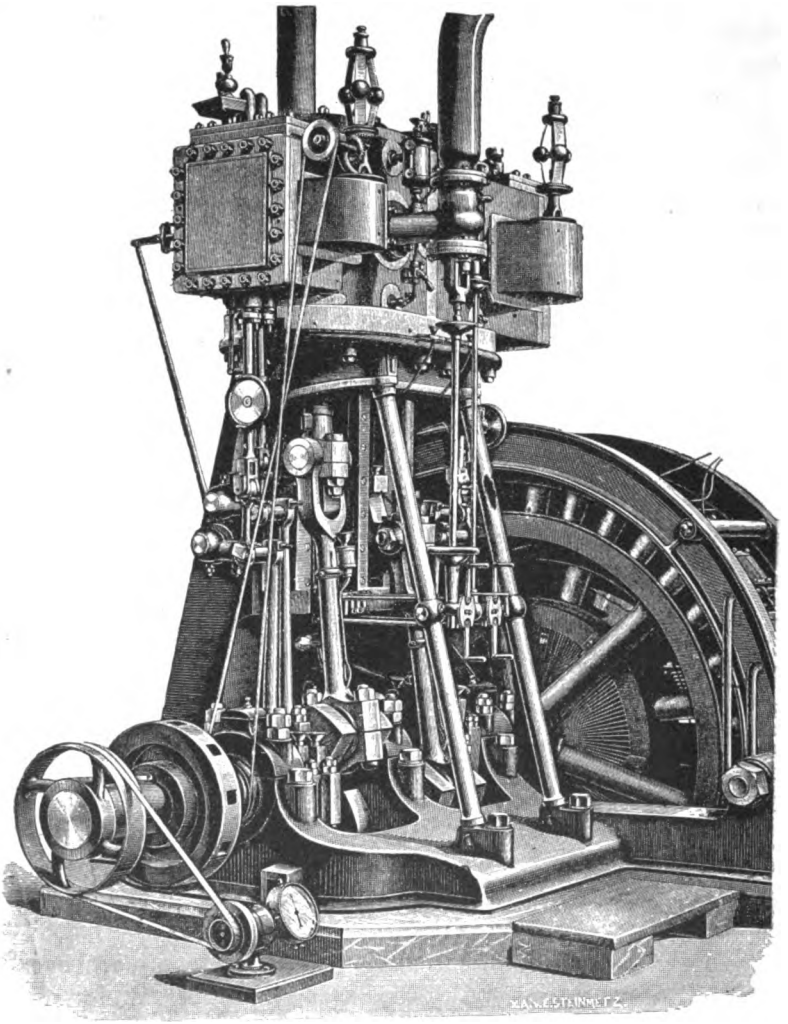

FIG.. 15

make it very troublesome to make the stuffing-box tight enough to prevent leakage of water.

18. Inverted Vertical Engines.—The cylinder of a vertical engine can be arranged to have the cylinder supported upon suitable frames above the crank and shaft, or the cylinder may be below, and the crank and the shaft above it. The arrangement with the cylinder overhead is by far the most usual and

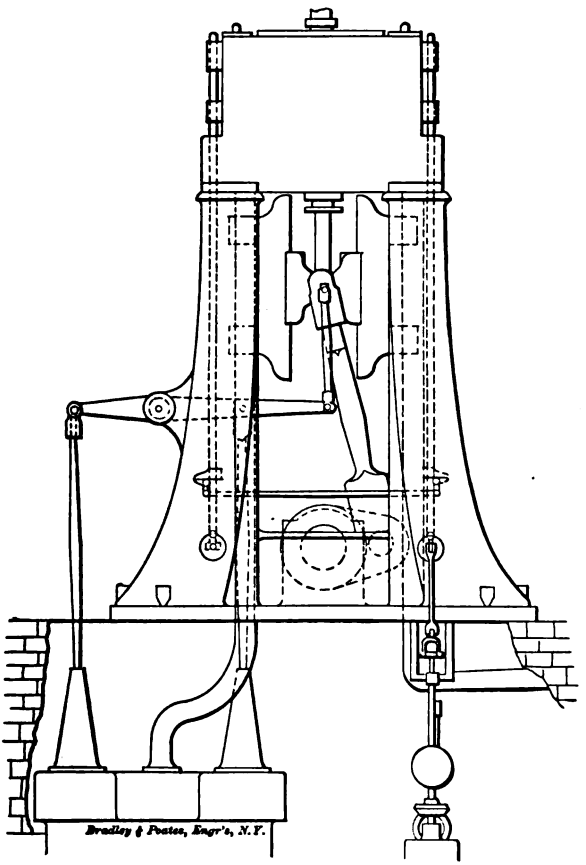

FIG. 16.

is known as the inverted vertical type. The general advantage of this arrangement is that the moving reciprocating parts, which are those whose inertia or living force must be taken up by solid connection and for which the crank-pin must provide, are held to the ground through the crank-shaft di-

rectly secured to the foundation. The cylinder has nearly the same strain on it as the crank-pin, but these strains are transmitted through the elastic cushioning action of the steam.

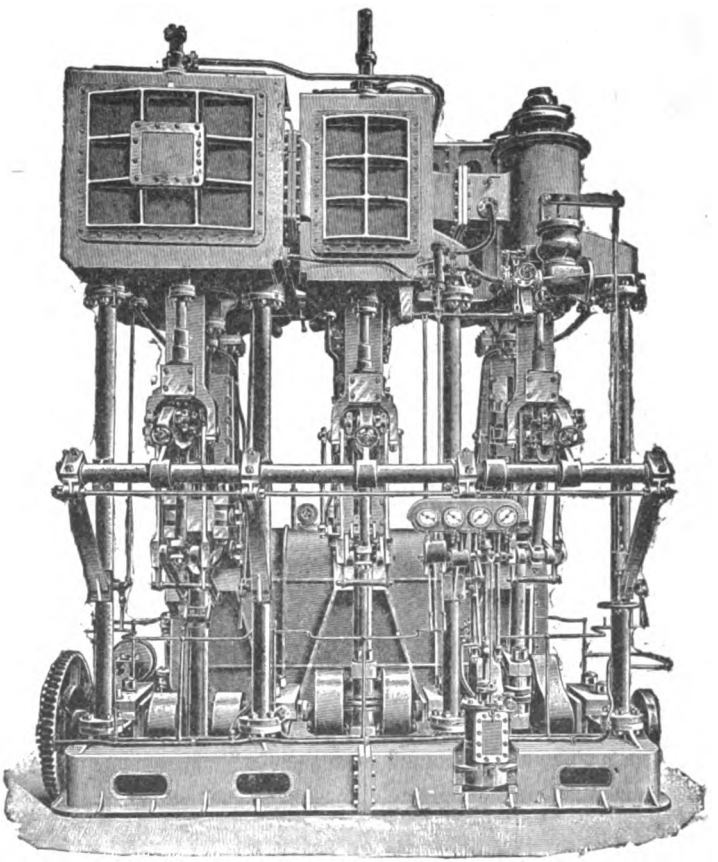

FIG. 17.

The cylinder furthermore, is not a moving part. Fig. 16 illustrates a typical inverted vertical engine of this sort.

For certain uses the inverted vertical arrangement is specially adapted by reason of the location of the engine-shaft near the base. It is this condition which has made this the typical marine engine, Fig. 17; but it is also adapted for

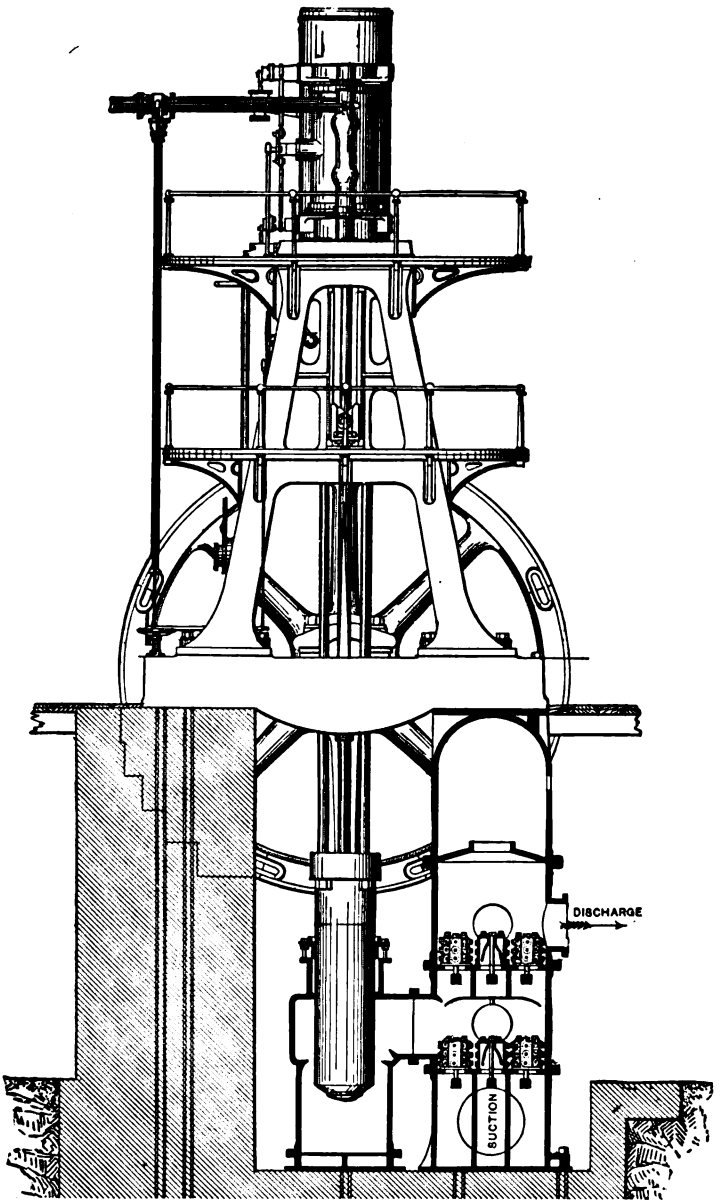

FIG. 18.

driving directly-coupled dynamo-machines, rolling-mills, and the like where the vertical arrangement is either necessary or preferred (Fig. 15).

It will again be found the most convenient arrangement for water-works pumping-engines where the level of the water in the well or source from which the pump draws is either some distance below the general surface of the ground or is liable to wide fluctuations. Furthermore, where the pumping organ is a plunger of considerable weight or length it will naturally be arranged to travel vertically and the steam-cylinder which drives it will be inverted vertically above it (Fig. 18).

19. Direct Vertical Engines.—When for any reason the shaft to be driven directly by the engine stands at a height above the ground, the direct vertical engine will permit the weight of the cylinder to be supported directly upon the foundation, while the piston-rod passing out through the top of the cylinder conveys the motion of the piston to the shaft overhead. This arrangement is very little known in America except for pumping (Fig. 19), and with one exception has been restricted to factory practice at slow rotative speeds. In European shops such engines are often bolted to the wall, and are then called wall engines. Where a vertical engine has been desired and the inverted type disapproved, either the back-acting design has been chosen (Fig. 13), or use has been made of the advantage offered by some of the beam mechanisms.

20. Inclined Engines.—It is sometimes convenient to arrange the engine-cylinders so that their axis is inclined to the horizon. This is the condition which is frequently met in marine practice where the propelling is done by side wheels whose diameter determines the height above the water of the shaft which carries them.

It is furthermore desirable to keep the centre of gravity as low as possible, and therefore to bring the weight of the cylinder or cylinders near the keelson. This has made the inclined engine a favorite type for light-draught vessels in Europe and for ferry-boat practice in American waters (Fig. 20). The frame of such engines is a comparatively light

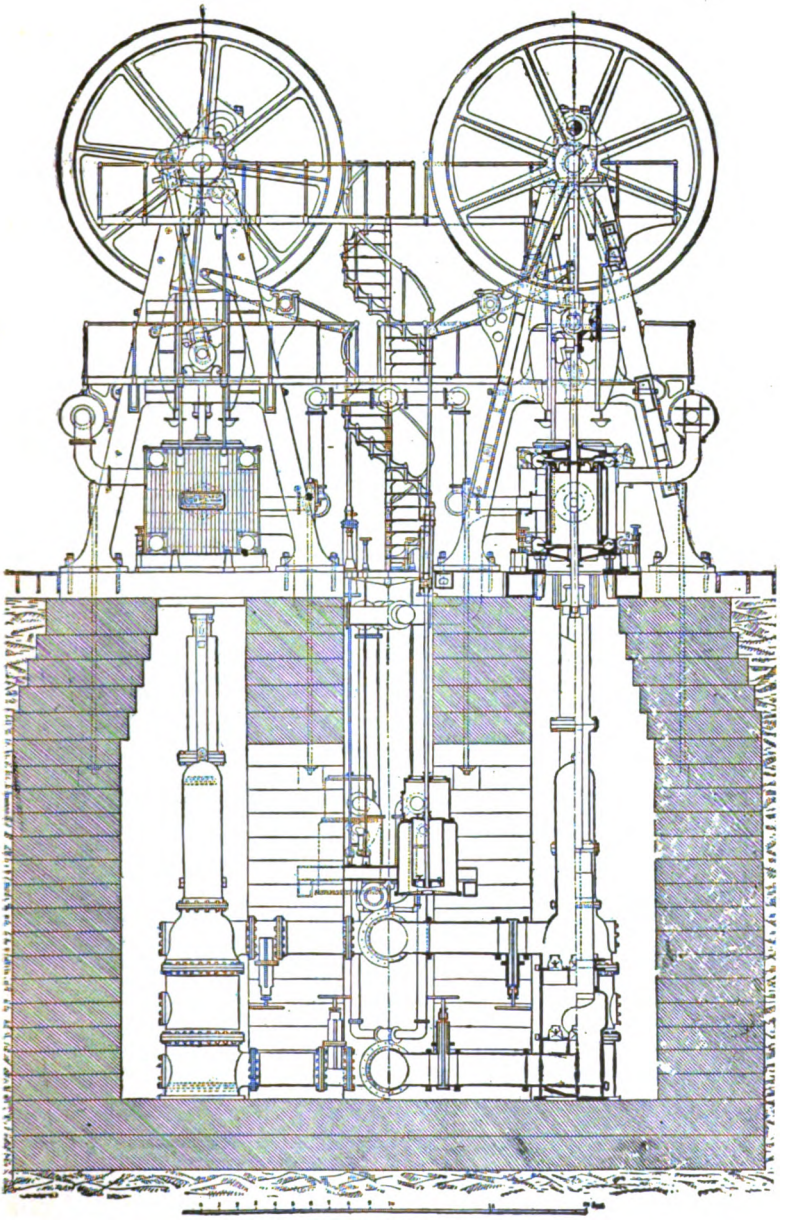

FIG. 19.

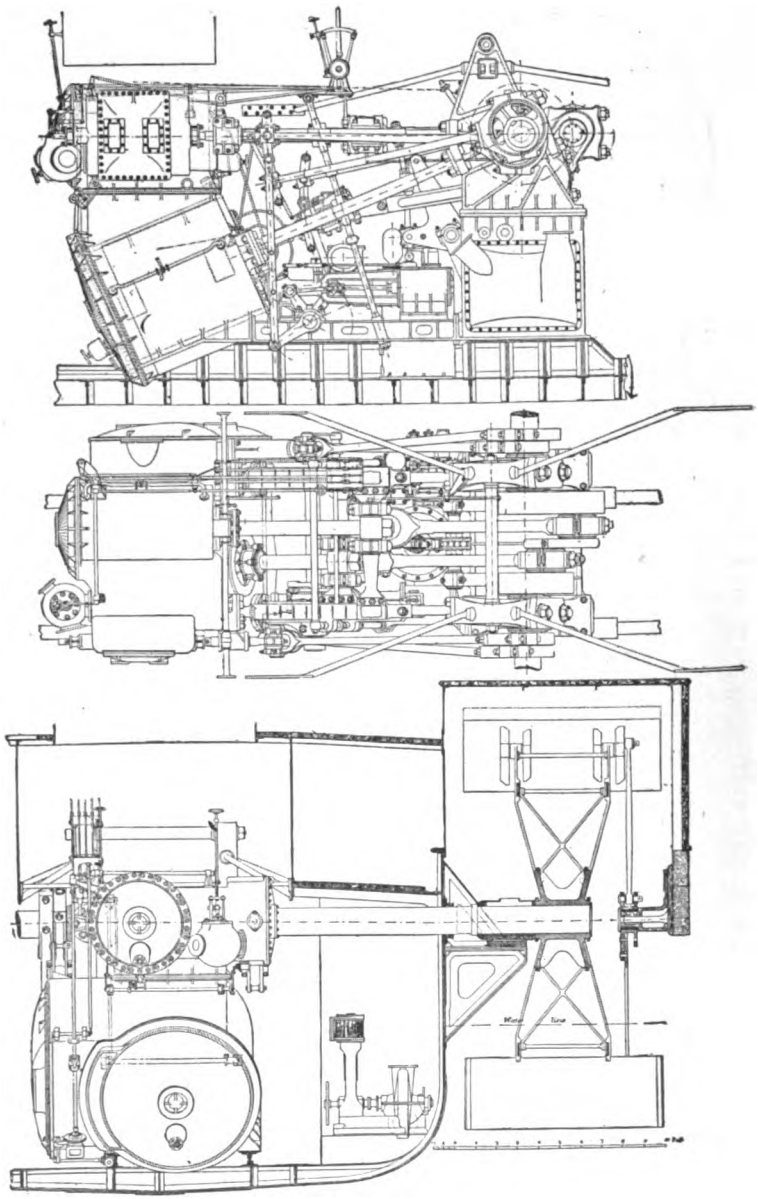

FIG. 20.

structure. For stationary practice the inclined engine has been almost limited either to very small designs or to the practice of pumping-engines. For small designs (Fig. 21) it permits the use of the large-diameter fly-wheel without

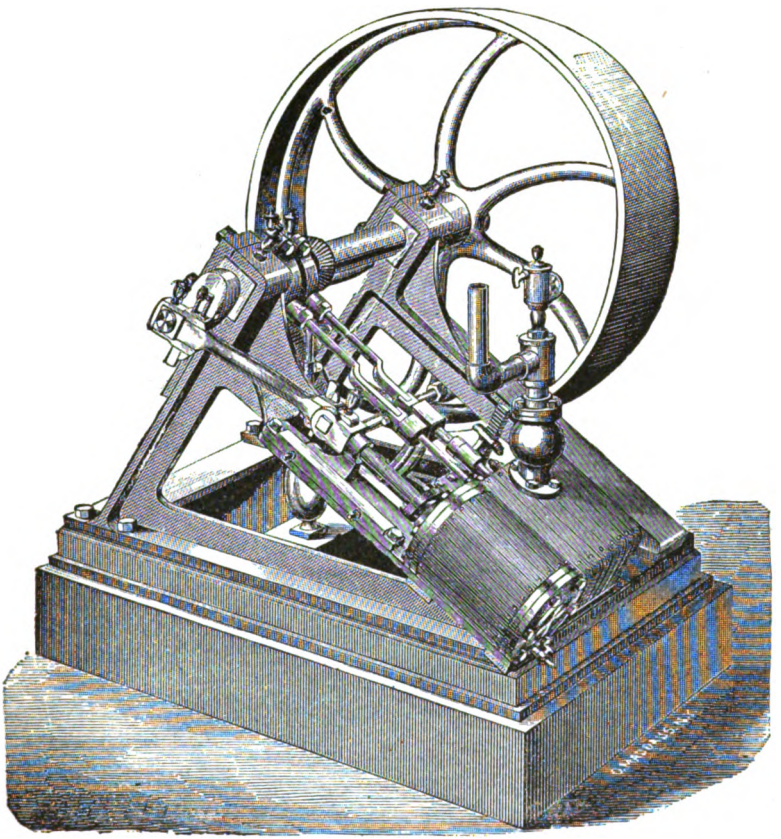

FIG. 21.

the necessity of a pit below the general level, and for pumping-engines it permits a symmetrical arrangement of two cylinders or four cylinders with the pumps below them on the same rods, and yet the engine does not extend over so great an area of ground-plan. In the design exhibited in Fig. 22 it will be observed that by the arrangement of the

two cylinders the practical result of having two cranks quartering (see par. 11) is secured with only one crank-pin.

The inclined engine has both the advantages and disadvantages of the horizontal and vertical engines; and while it does

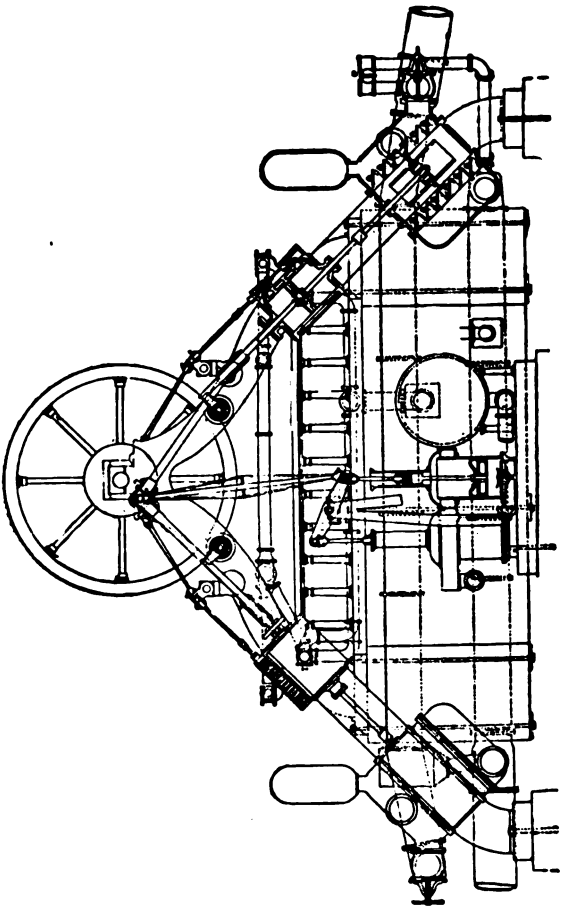

FIG. 22.

not suffer as much from the disadvantages, neither does it benefit as much from the advantages. The piston is apt to wear the bore seriously from a tendency to dig into the metal at upper and lower corners.

21. Combined Horizontal and Vertical Engines. — A design of engine has been used for pumping or compressing

service in which the steam-cylinder is arranged with vertical axis, and the pumping or compressing cylinder is horizontal or inclined. In a form of ammonia-compression refrigerating machine this arrangement is reversed, and the steam-cylinder is horizontal and the ammonia-cylinder is vertical (Fig. 24).

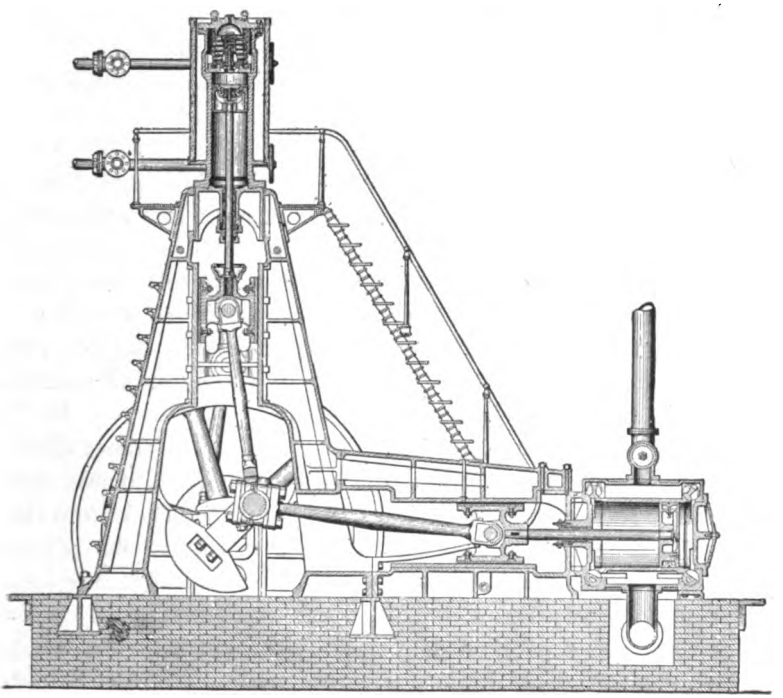

FIG. 24.

This arrangement is designed to quarter the cranks of the respective cylinders, so that the maximum effort of the steam end should concur with the greatest resistance. It can also be made an arrangement for a beam-engine mechanism (see par. 22), securing the advantages of the vertical steam-cylinder and yet so arranging the water-cylinders as to permit convenient access to valve-chambers and convenient approach for the suction-water.

22. Direct-acting and Beam Engines.—In the typical

mechanism presented in Fig. 1 the mechanism by which the motion of the piston is transmitted to the revolving crank is as direct as is possible. Engines in which the end of the piston-rod acts thus directly upon the pin of the crank are called direct-acting engines.

The term direct-acting is also used to express the opposite of back-acting, and is again used in steam-pump practice to denote the type of pump in which there is introduced no rotary mechanism with shaft and fly-wheel weight, the steam-piston acting directly upon the pumping-piston. In this latter sense it is synonymous with the term non-fly-wheel pump, and in the first case it is synonymous with forward-acting engine to distinguish it from back-acting. It is unfortunate that the same term should have so many different meanings, because in the sense in which it is desired to use it here the distinction is to be drawn between direct-acting engines like Fig. 1 and those in which the effort in the cylinder reaches the crank-pin indirectly through a beam.

23. Beam-engines.— Since the earliest steam-engines were designed to operate the rods of mine-pumps, it was convenient to locate the cylinder at a little distance back from the mouth of the shaft, and to transmit the motion of the piston to the rod which went down the shaft or pit by means of a pivoted lever or beam. This beam was usually of wood pivoted at the centre on convenient bearings, which were in most cases supported upon a masonry wall. When the function of the engine changed from that of pumping to the continuous driving of a revolving shaft the general design was only modified by connecting the outer end of the beam by a suitable connecting-rod to the crank-pin of the revolving shaft, and it seems probable that the term pitman often and properly attached to this organ of a beam-engine mechanism is a survival of the early mining term. The earliest steam-engines in America for marine use were beam-engines, and the preference of many skilled designers of side-wheel vessels for this type of mechanism shows that there are valid reasons for its popularity.

The advantages of the beam-engine mechanism are as follows:

First, the steam-cylinder can be vertical (pars. 16 to 18.)

Second, the cylinder and its weight can be kept low down and the shaft may also be directly attached to the bed-plate near the foundation.

Third, a long stroke for the piston is possible and yet not too much space in ground-plan consumed. This is a great advantage in side-wheel practice and in pumping. In both these cases the number of revolutions or the number of reciprocations of the piston must be kept low, yet it is desirable that the piston-speed LN (par. 6) should be made high in order that the engine may be powerful. The beam-engine attains these results in a satisfactory way.

Fourth, the beam-engine secures a flexibility in the alignment of the cylinder-axis in its relation to the axis of the shaft. This is specially desirable for vessels of light draught whose hulls cannot be made absolutely rigid.

Fifth, for engines specifically designed for pumping, and particularly where several steam-cylinders and work-cylinders are features of the design, the beam construction furnishes convenient points of attachment for these various organs.

Sixth, where valid reasons demand that the steam-cylinders be vertical and the work-cylinders horizontal or inclined, while their motion shall be limited and controlled by a revolving crank and fly-wheel, the beam principle lends itself to attainment of this result.

It is probable that the union of high piston-speed with slow rotative speed, and the advantages which are secured by the combination of these two features in a flexible arrangement, are the cogent reasons for the widespread acceptance of the beam mechanism.

24. Structure of Beam-engines.—Fig. 30 illustrates a typical arrangement of an American river-boat beam-engine of the period 1850 to 1875. The type was practically fixed by the late Charles W. Copeland, and the sketch shows the beam supported on a frame of wood which has been variously

called the gallows-frame or the A-frame, from its shape. It will be seen to have been well braced by wooden knees. The modern frame is of steel worked up into box-girder forms,

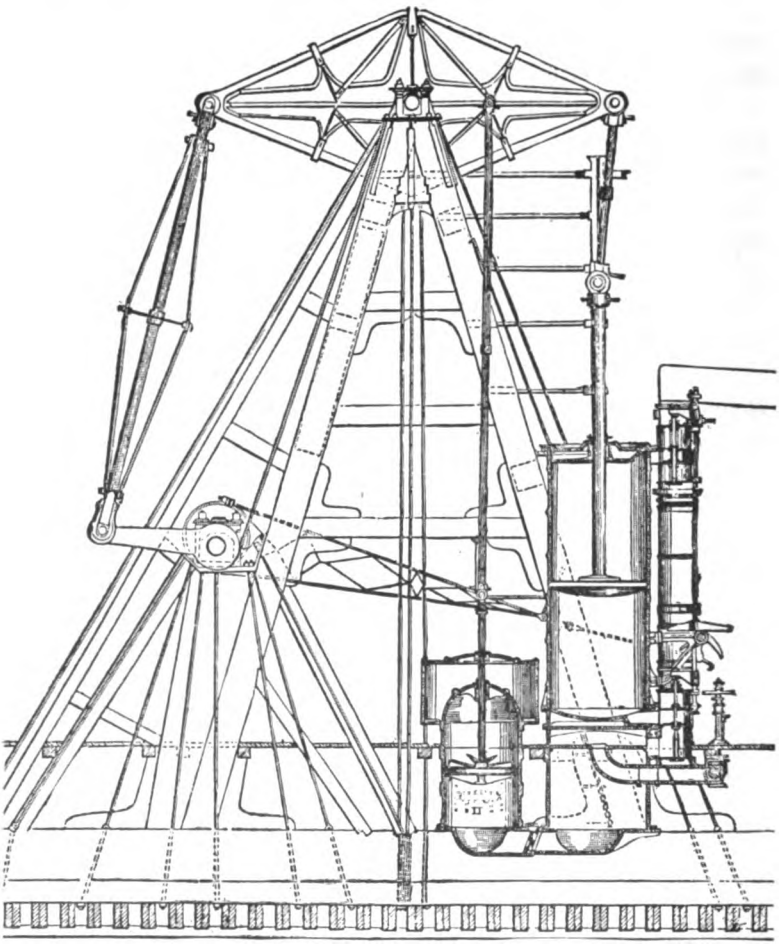

FIG. 30.

securing thereby greater rigidity and less weight than was required in the wooden frames which they have displaced.

The beam itself in early practice was a cast-iron girder with the metal of the flanges so disposed as to secure the

greatest strength and stiffness with the least weight. This gave to the beam the form of two semi-parabolas back to back, meeting over the centre. The greater lightness attained by using wrought iron for tension elements of the beam caused the open-work or lozenge beam to be early adopted by American designers. Its first use is usually attributed to Stevens. The solid wrought-iron forged diamond or lozenge transmits the alternating push and pull of the piston, and the cast-iron centre keeps the beam in shape and is exposed to compression only.

The cross-head at the upper end of the piston-rod either is guided in a straight-line path or is steadied by a linkage or parallel motion. The linkage is less usual. Two short connecting-rods connect the cross-head to the beam, one on each side of the latter to cause a symmetrical application of the force. Great care is necessary in the practical handling of these short connecting-rods, as they wear at the bearing surfaces; since if they are permitted to become of unequal length a serious cross-strain is brought upon the cross-head, and a twisting strain upon the beam.

At the outer or crank end of the beam depends the long connecting-rod or pitman. It requires to be long when the crank is long, and it is therefore usual to brace and truss it with light steel tension-rods and king-posts, so that in its amplitude of swing its own mass should not have a tendency to make it bend.

Fig. 31 shows the form which the beam-engine may be made to take for war-ship conditions and where a short stroke and rapid revolution of the screw-shaft running lengthwise of the vessel are the conditions to be met. The vessel is a twin-screw cruiser, and the engines are arranged right and left athwart ship. There is space between the two shafts for the vertical cylinders and the beam frame, and yet the whole engine mechanism is below the water-line. Fig. 32 shows the convenience of the beam mechanism when pump-plungers and connecting-rods are to be provided for as well as the steam-cylinder connections. While the inclined-cylinder design

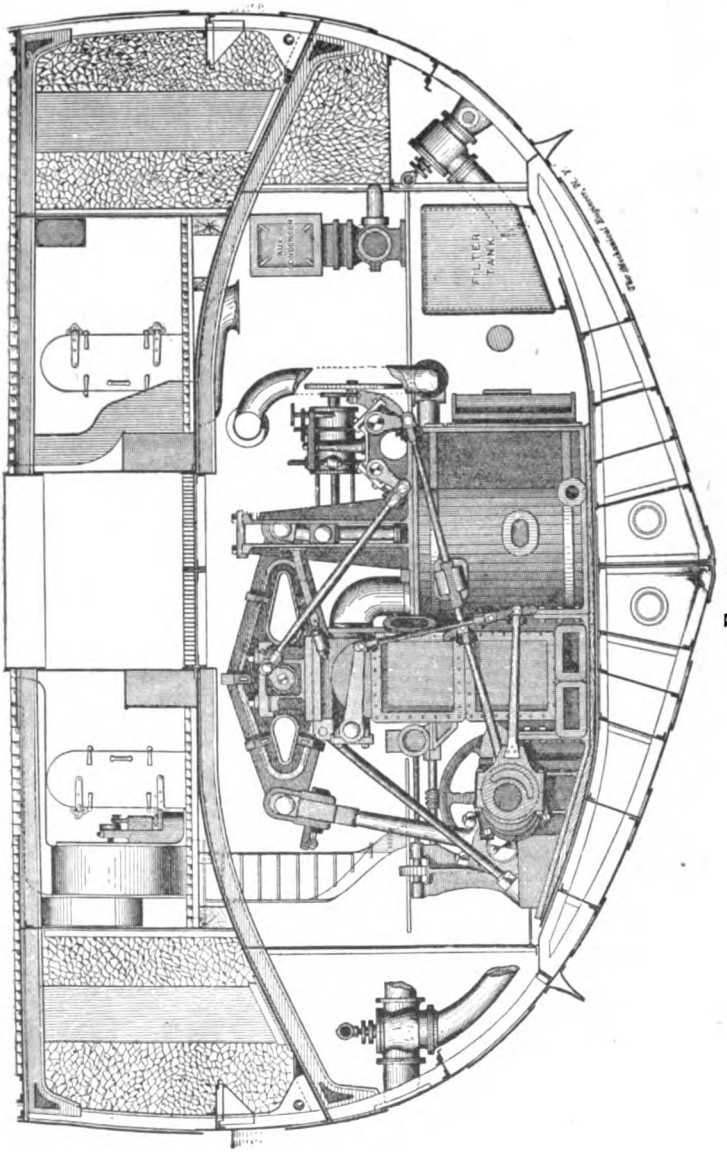

FIG. 31.

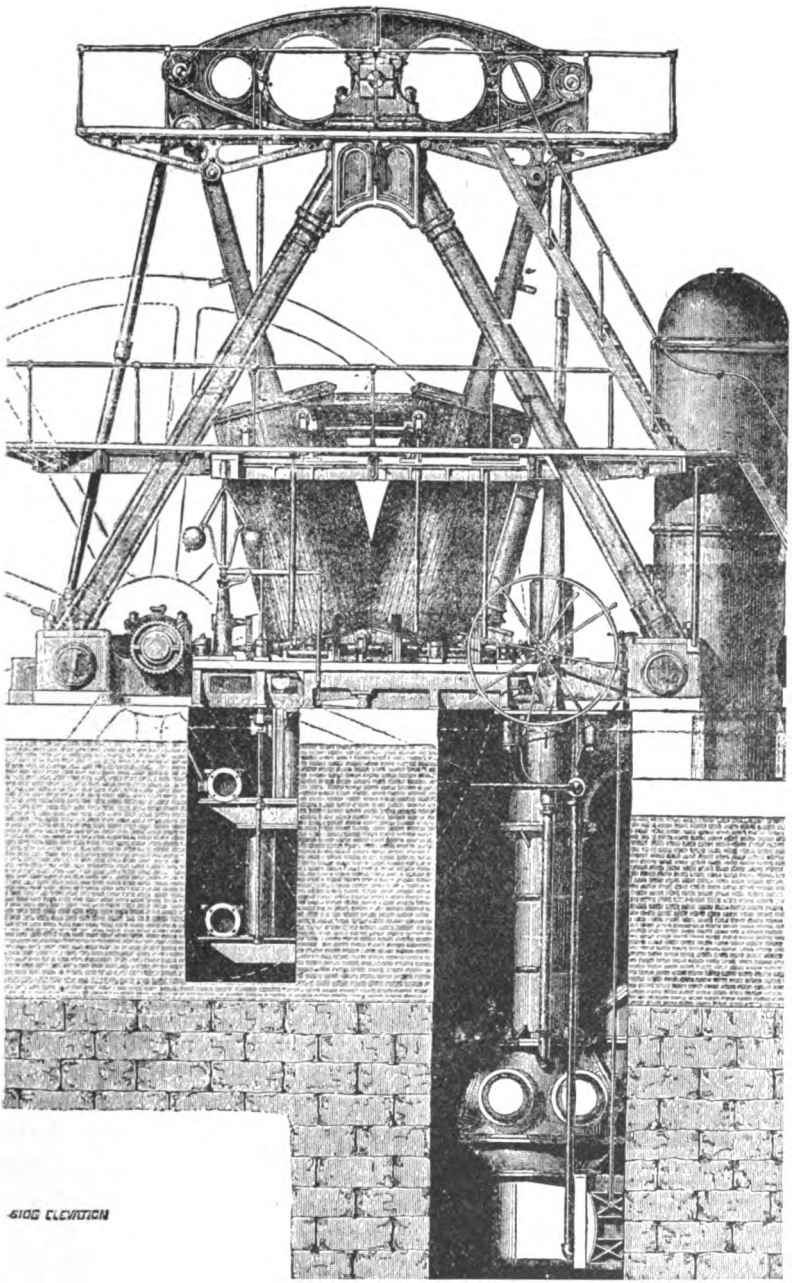

FIG 32.

permits the straight descent of the plunger-rods, it can readily be seen that a successful design could as easily have been made by having the cylinders vertical and attached to a

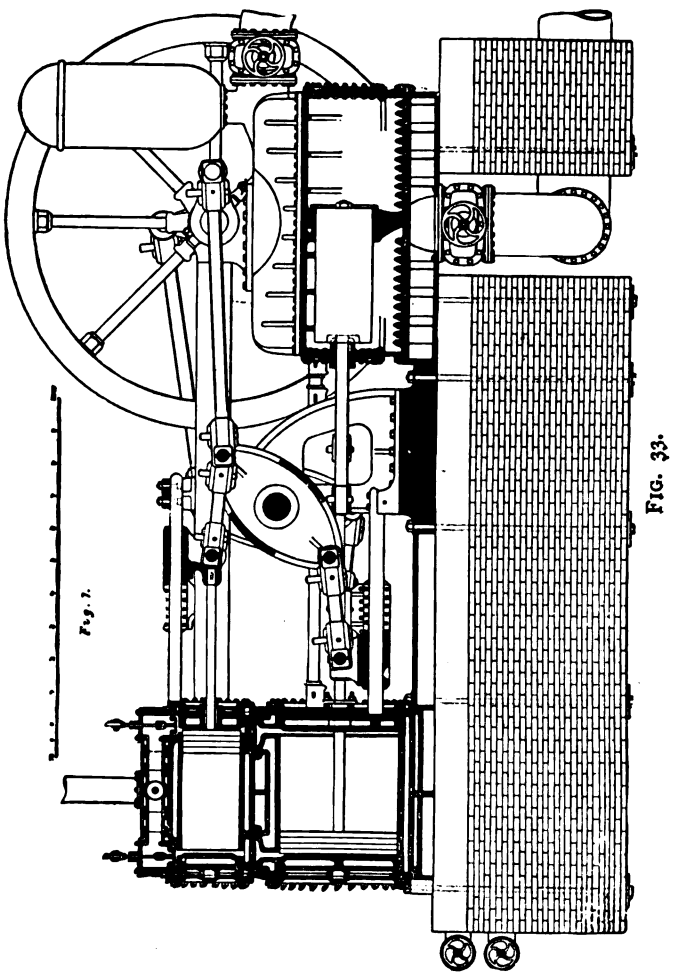

FIG. 33.

longer beam, leaving space nearer the centre for the attachment of the plunger-rods, and one on each side could have been used. It is an advantage to give a long stroke to the steam-cylinder to secure high piston-speed.

Fig. 33 shows a modern type of beam-engine in which the cylinders are horizontal and the angular motion of the beam is on each side of a vertical centre-line instead of a horizontal as hitherto. The pump-plunger is here continuous with one of the piston-rods and the beam serves to transmit and equalize the work of the other cylinder and the regulating effect of the fly-wheel and crank.

Fig. 34 shows a type of triangular beam-engines which

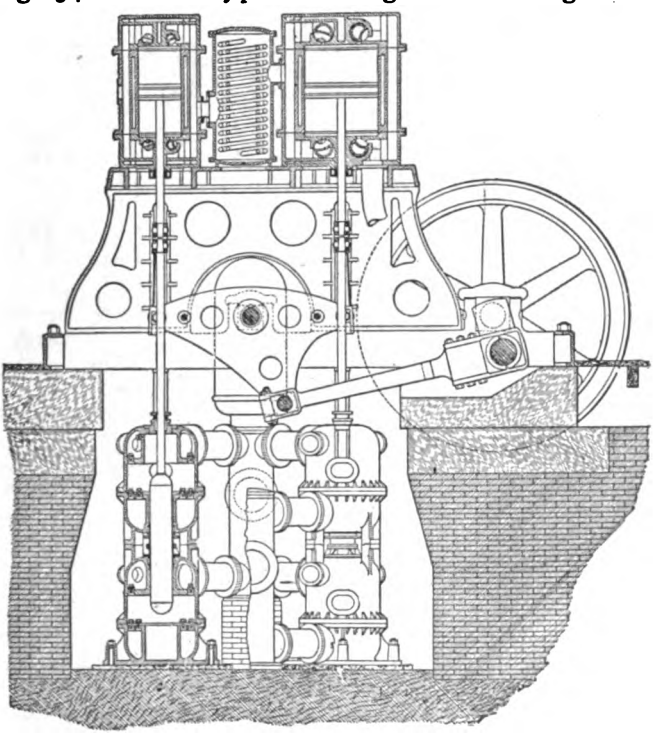

FIG. 34.

come about when the axes of the cylinders are parallel to each other and the fly-wheel shaft in line with neither; in Fig. 35 the beam is in line with the steam-cylinder, and in Fig. 36 the beam loses its linear or conventional shape.

25. Objections to the Beam-engine.—The Side-lever Engine.—Objections to the beam-engine are:

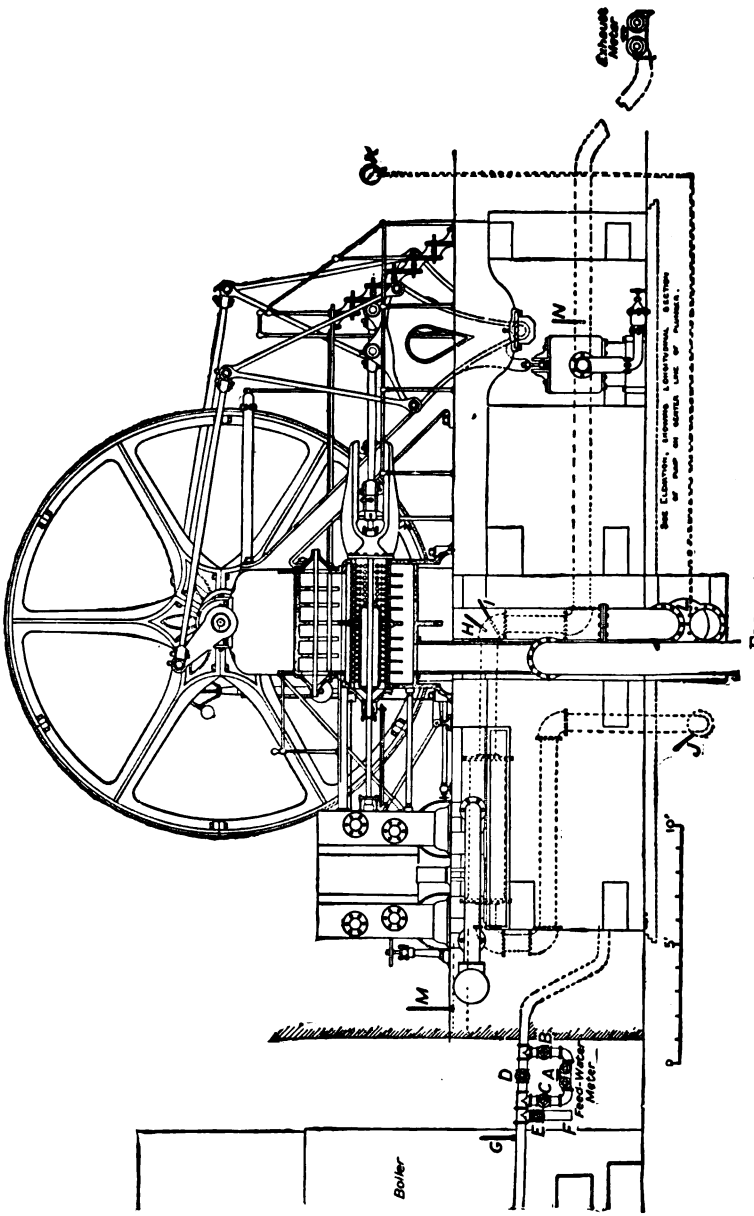

FIG. 35.

First, those attaching to a transmission of the work through so many joints indirectly to the crank-pin. Secondly, the objection in marine practice to having the weight of the

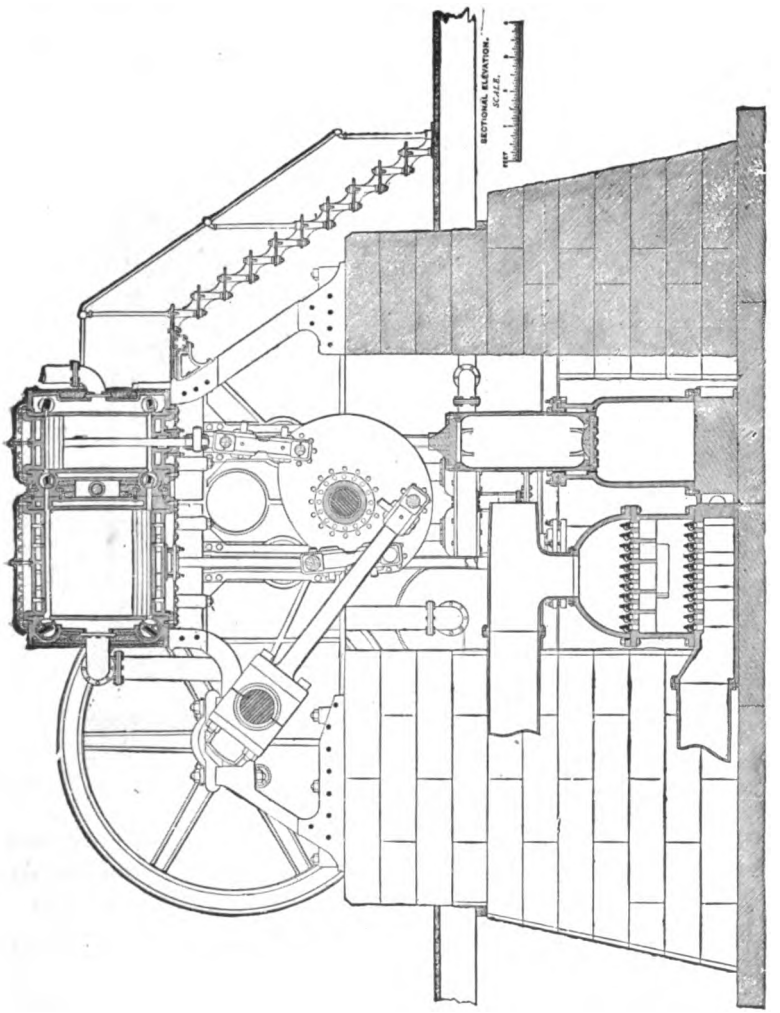

FIG. 36.

beam so far above the centre of gravity of the hull. Third, the objection in war-ship practice to having a vulnerable part of the mechanism exposed and a part whose destruction is fatal.

These objections gave rise at an early date to the adoption of the back-acting principle to beam-engines with a double beam pivoted below on each side of the frame. From this double beam or side lever the connecting-rod or pitman rose to the level of the main shaft above the beam. This was the type known as the side-lever engine, and was in very general use up to the time when the introduction of the propelling screw displaced the side wheel for ocean service (Fig. 37). A

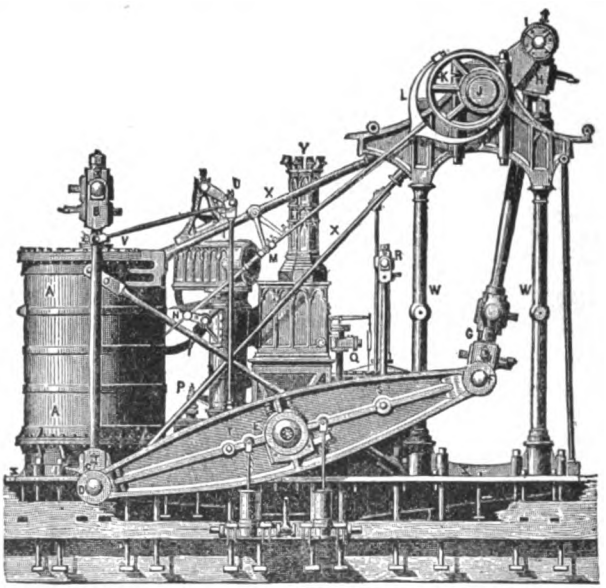

FIG. 37.

combination of back-acting and beam-engine mechanism is to be found in certain monitor engines, where the beam became more like a rock-shaft, or had only one side to it, but in different planes. Fig. 38 shows the engine of the U. S. monitor Monadnock, embodying this peculiarity.

26. The Rotary Steam-engine.—By reference to par. 9 it will be seen that it is possible to apply the expansive energy of steam directly to produce rotation of the engine-shaft. The piston instead of reciprocating in a straight cylinder has a

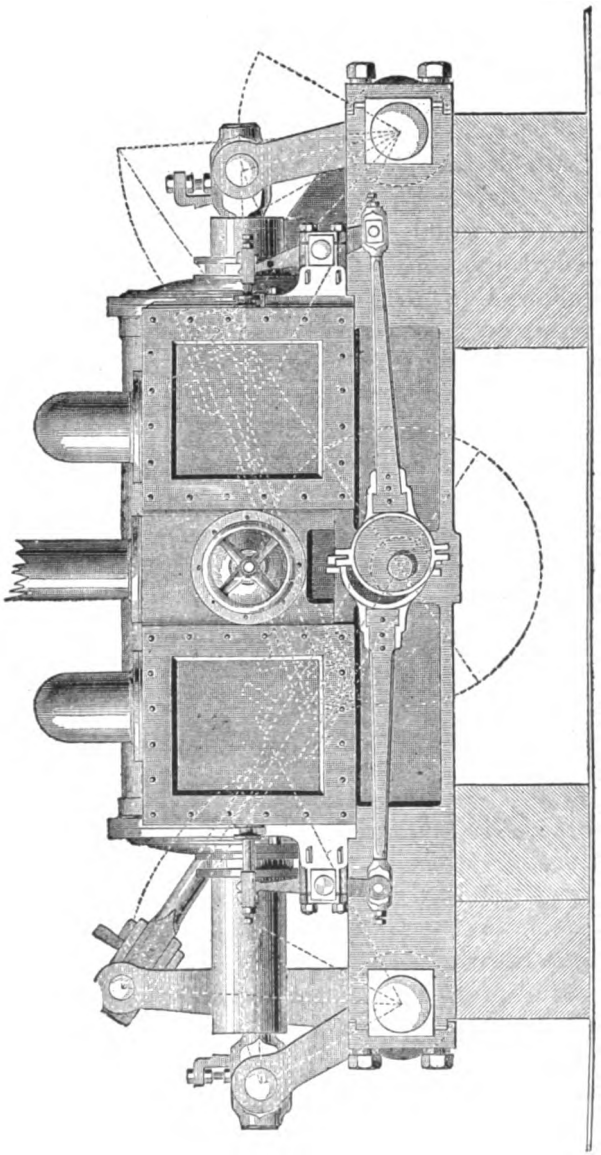

FIG. 38.—ENGINE OF U. S. MONITOR MONADNOCK.

rotary or revolving motion around an axis which is usually the axis of the shaft. The area on which the steam presses is really an enlargement of the crank-pin properly modified for this purpose. The piston is usually a plane surface which fits what must be called the cylinder steam-tight at its edges, and the path of the piston is a continuous curve, in which the centre of effort upon this piston moves in a given time.

The pressure coming to the cylinder through a pipe must exert its effort upon the rotating piston or pistons, and must then be allowed to escape. There must therefore be the steam-pressure on one side and the pressure of the atmosphere as nearly as may be upon the other side, and this condition must be continuous at all points of the rotation. Provision must therefore be made in the design to separate the steam and exhaust sides of the rotating piston, and this must be done by some device which shall not interfere with the continuous rotation of the pistons. The device or appliance used to separate the inlet and exhaust openings of a rotary-engine cylinder has been conveniently called the abutment, and every successful rotary engine must exhibit the two organs of abutment and piston. While the number of designs of rotary engines is very great, they may be roughly grouped into two classes: first, where the abutment and piston are continually interchanging their functions; and second, where the abutment is always abutment, and pistons are always pistons.

27. Rotary Steam-engines in which Pistons and Abutment Alternate their Functions.—Fig. 39 illustrates two forms of engine constructed upon this principle. In both cases the steam enters at the bottom and exerts its pressure upward upon the surfaces exposed to its action. It will be seen that a full pressure of steam is exerted on the lower part of the right-hand piston, while the upper part has pressing against it only the atmospheric pressure which prevails in the exhaust outlet *B*. The function of the left-hand piston *C* in the present position is simply that of preventing the direct passage of steam from the inlet *A* to the outlet *B*, without producing rotative effect. *C* is therefore the abutment. The

steam-pressure therefore turns the shaft of the piston *D* in the direction opposite to that of the hands of a watch, while the piston *C* turns in an opposite direction, or clockwise, from its connection outside the cylinder by means of gears and because

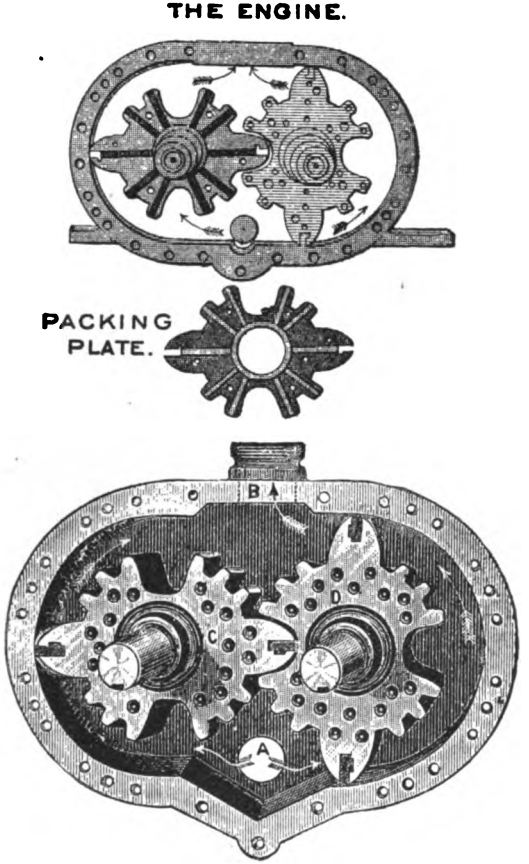

FIG. 39.

there is a slightly greater area at the left hand receiving the steam-pressure than there is at the right. When the shaft and pistons have made a quarter-revolution their respective positions will be reversed. *C* will be the driving piston and *D* the abutment, and so these two organs will alternate their

functions, each serving in each capacity twice in a revolution. The profile of these pistons must be circular and trochoidal curves, that they may roll upon each other and in contact with the outer casing without permitting leakage. They must also prevent leakage at their ends between the flat heads of their casing. Steam-tightness is secured in the two designs shown, by different methods. Against the cylindrical parts of the casing packing-strips are used in both designs which are forced

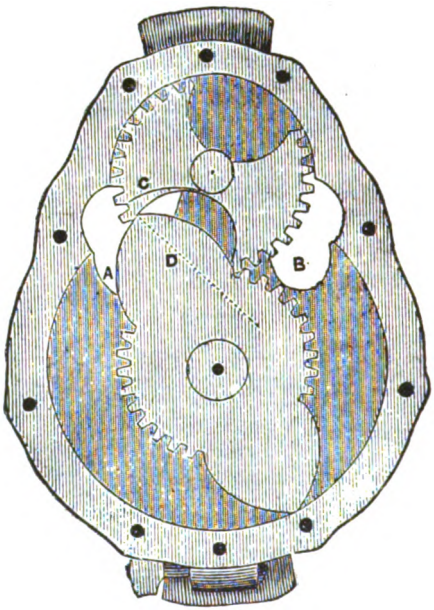

FIG. 40.

outwards by springs acting radially. The shape of the strips must be such that when the piston leaves the casing towards the middle the strips shall not drop out. For the packing against flat surfaces one design uses radial strips similarly pressed against the flat heads by springs, and the other depends upon counterbored holes drilled a short distance apart, parallel to the axis within which condensation and lubricant will be caught, which will serve by their capillary action to prevent any considerable escape of live steam.

28. Rotary Engine with Persistent Function of Piston and Abutment.—Fig. 40 illustrates the simplest type of rotary engine in which piston and abutment continuously discharge the function of each without interchanging them. The steam entering at the inlet *A* is prevented from crossing to the outlet *B* by the steam-tight contact of the abutment *C*

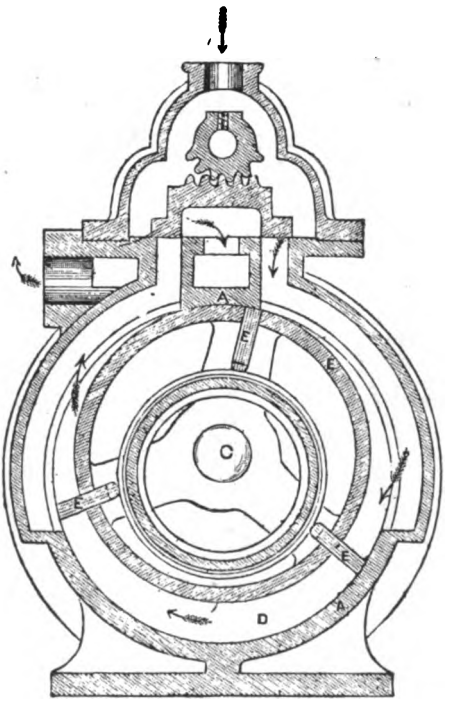

FIG. 41.

with the casing and the piston *D*. Steam, therefore, acts to produce rotation of the piston *D* in a direction contrary to that of the clock-hands, because there is less pressure behind the lower part of it than there is in front of it, and therefore the shaft has a continuous motion. Fig. 41 illustrates a type in which the abutment is the continuous ring separating the inlet and the outlet at the point *A*, and compelling the steam to take the path between the abutment-ring and the outer

casing and exert its pressure upon those surfaces of the pistons F which protrude through the abutment-ring in radial slots. In this design we have three pistons carried upon three arms of the spider which is secured to the revolving-shaft, and the abutment-ring being out of centre with that shaft, permits the pistons to pass the separating portion A. As shown in the cut, the controlling valve stands in its central position so that if moved to the left the steam will follow as shown by the arrows and the pistons and shafts will rotate clockwise. If the valve be moved to the right steam will enter at the left-hand opening, producing a rotation of the piston anti-clockwise and the steam will escape into the exhaust-passage through the hollow in the valve from the right-hand port. Fig. 42 shows another form of ring-abutment rotary engine.

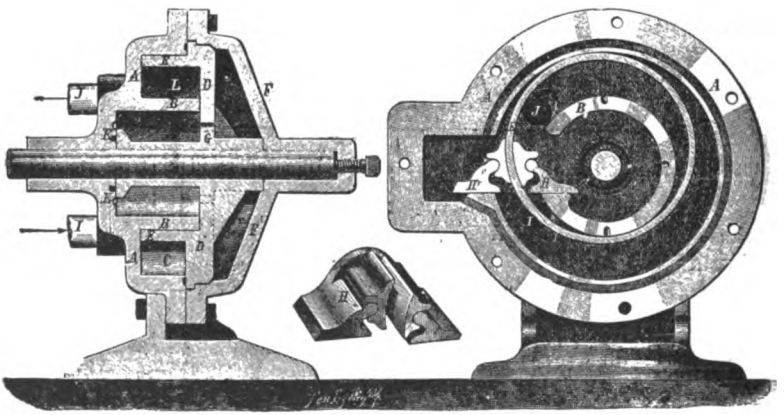

FIG. 42.

It will be apparent that the engine can be reversed in principle and become a rotary pump by applying power to the shaft by outside mechanical means and admitting water through the passages with which the steam enters in the rotary engine. This convenient peculiarity has given rise to a popular form of steam fire-engine, in which the steam and water pistons are arranged on parallel shafts properly geared together. Such an engine requires no valves on its water end,

and the water used can be full of impurities and solid matter without great inconvenience.

29. Advantages of the Rotary Engine.—The arguments to be urged in favor of the rotary-engine principle are so many that the skill of innumerable inventors has been continuously directed towards their design. Among other advantages are:

1. The effort of the steam is applied directly without intervening mechanisms for conversion of the motion. This avoids their attendant friction, their costly fitting, and probable lost motion.

2. There being no reciprocating parts, there is no inertia to be overcome at the beginning of the stroke, with the attendant consumption of energy required to accelerate them.

3. The engine has no dead-centre, but will start from rest in any position.

4. Absence of reciprocating parts makes it easy to run the shaft at the highest speed. This has attracted designers of steam-driven dynamos to use this type of engine.

5. The engine becomes very compact from the absence of converting mechanism, so that it occupies little room.

6. The engine has either no valve-gearing, or that which it has is of the simplest character.

7. These features, and the absence of expensive mechanism, make the engine cheap to build and therefore usually cheap to buy.

8. Absence of reciprocating-rods and dead-centres results in a construction in which the presence of condensed steam in the cylinder does no harm. It does not stop the engine from turning, it cannot endanger the cylinder-casting, the engine can be started, even if under water, by simply opening the valve which admits pressure to it; it will start with solid water.

9. Its incased construction and the above peculiarity particularly adapt it for out-door service and exposed places. Weather does it no harm, and its protection from outside injury makes it a serviceable quarry motor.

10. It requires no skill to handle it. If constructed to be

reversible as in Fig. 41, it can be reversed from a distance by simple rope and weight.

30. **Disadvantages of the Rotary Engine.**—The objections to the rotary engine are both practical and inherent. The practical objections belong to the difficulty of satisfactorily packing surfaces which do not move through equal spaces in equal times. Those parts farther from the axis move through a longer path in a revolution than those nearer to the axis. The wear from abrasion is therefore greater at one part than another. When the packing-strips have become somewhat worn, leakage ensues, and a noisy rattle from looseness of the fits. A second practical difficulty is the expense connected with proper lubrication of such engines, and the difficulty of taking care of excess of oil rejected by the exhaust. If efficiently lubricated, they consume an excessive amount of oil.

The inherent objections to the rotary engine are:

1. The presence, in the volume to be filled by live steam from the boiler, of an excessive waste space which has to be filled by steam at each revolution, which steam is exhausted without doing all the work there is in it. This corresponds in reciprocating engines to an excessive clearance.

2. The very continuity of the action of the steam upon the rotating pistons precludes the possibility with the single rotary engine of working the steam expansively, so that when the steam leaves the motor it shall have become largely reduced in temperature and pressure by doing work with increase of its initial volume. The expansion is from the boiler and the water in it, and not from the actual volume received by the engine for the work of one stroke. In other words, the rotary engine is a non-expansive engine. These two difficulties make the rotary engine uneconomical.

3. It is difficult to design the rotary engine for large horse-powers:

First, because the structure becomes inconvenient the moment that large areas are desired, so as to make a value of PA in the horse-power formula a large factor; second, because

it becomes difficult to secure the condition of high piston-speed in feet per minute unless the diameter of the casing be made so large that the difficulties both practical and inherent become nearly insurmountable and the advantages of the rotary principle are sacrificed.

The economy which a single rotary engine cannot secure from its inability to work the steam expansively has been sought and secured in a degree by arranging rotary engines in series upon a shaft, so that the steam rejected from number one engine becomes the driving steam for motor number two of larger volume. By this means the steam when rejected is at more nearly the pressure and temperature of saturated steam at atmospheric pressure than can be attained with the single rotary engine.

31. **The Steam-turbine.**—Closely resembling the rotary steam-engine in its feature of direct application of power are the forms of the steam-turbine. They are of several different types, but all depend upon receiving the living force of steam escaping through a nozzle from a high pressure to a lower upon curved vanes or buckets. These vanes receive the impact of the rapidly moving steam and utilize its energy, the shape of the buckets being such that when the steam leaves them it has only sufficient velocity to escape into the exhaust-pipe so as to be freed from the motor. The three best known steam-turbines are Dow's, Parson's, and the Delaval, of which Figs. 43 to 46 present views and sections.

32. **Square-piston Engines and Disk-engines.**—A form of engine has been designed to secure compactness with direct application of the steam-pressure upon the crank-pin, which has been called the square-piston engine from the shape of the cylinder and the double pistons in the head. It will be seen from the cut Fig. 47 that there are two sets of reciprocating pistons, one in a horizontal plane and the other in a vertical plane. Each piston is really a part of the frame which slides steam-tight in the casing which it fits. The double motion enables the components of rotary motion to be provided for in the reciprocating frames upon which the steam-

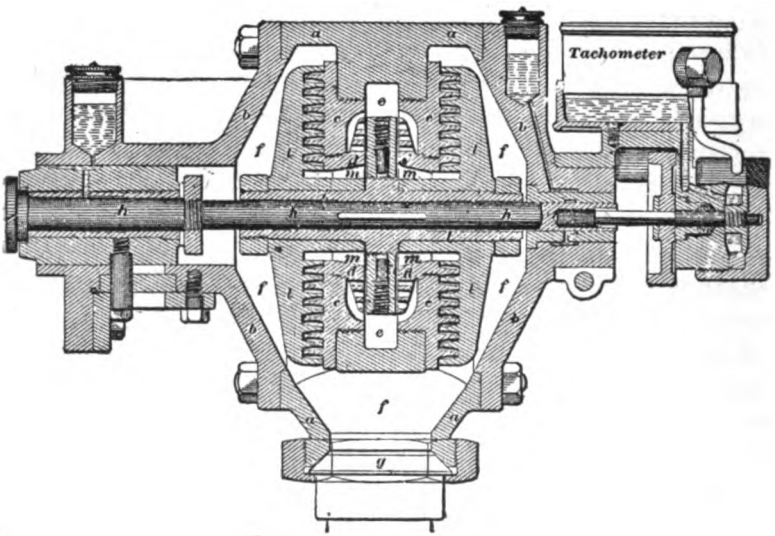

FIG. 43.—DOW TURBINE.

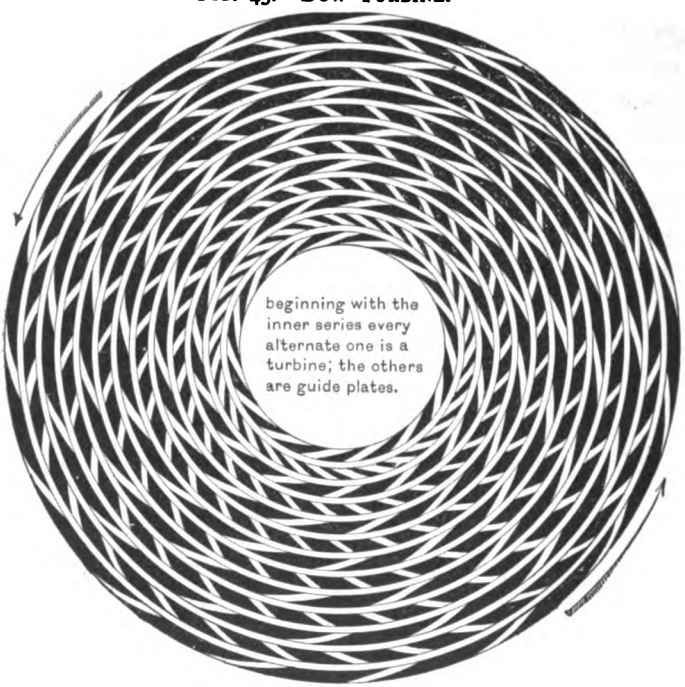

FIG. 44.—SECTION OF DOW TURBINE.

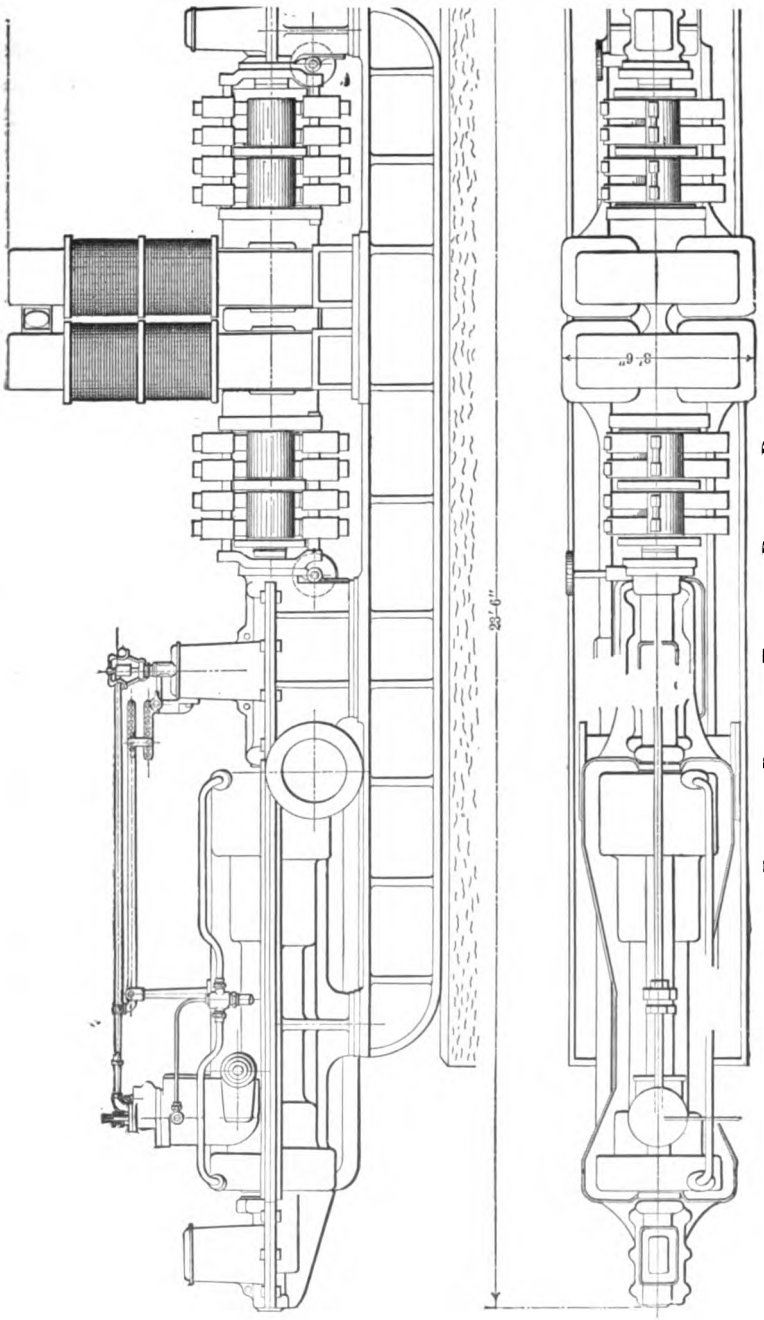

FIG. 45.—PARSONS' TURBINE, DRIVING DYNAMO.

pressure acts directly. It is not difficult to make such pistons serve the purpose of their own valves, so that an engine of this

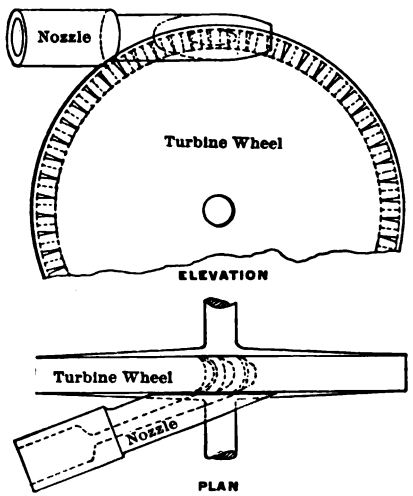

FIG. 46.—DE LAVAL TURBINE.

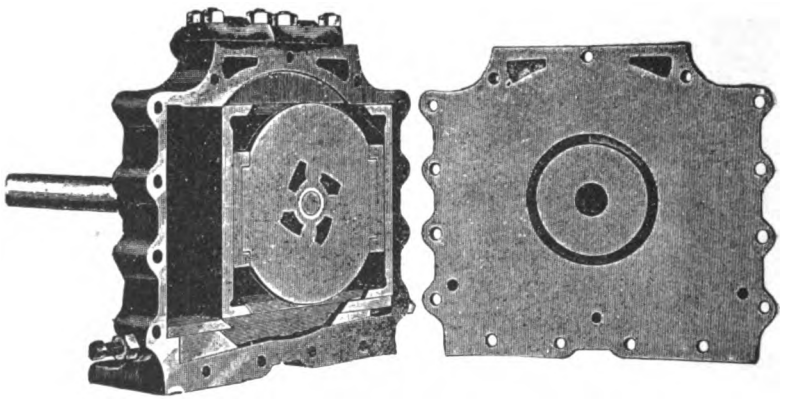

FIG. 47.

construction offers many of the features sought by the rotary-engine design and yet permits expansive working.

What are called disk-engines are of two great types. The first might properly be called a vibrating-piston engine or

sometimes a pendulum-engine, such as is shown in Fig. 48. It will be seen that a flat flap or disk does not revolve through the complete circle, but only through a relatively small arc from whose motion outside of the cylinder proper the outer connecting-rod will convert vibratory into rotary motion as in

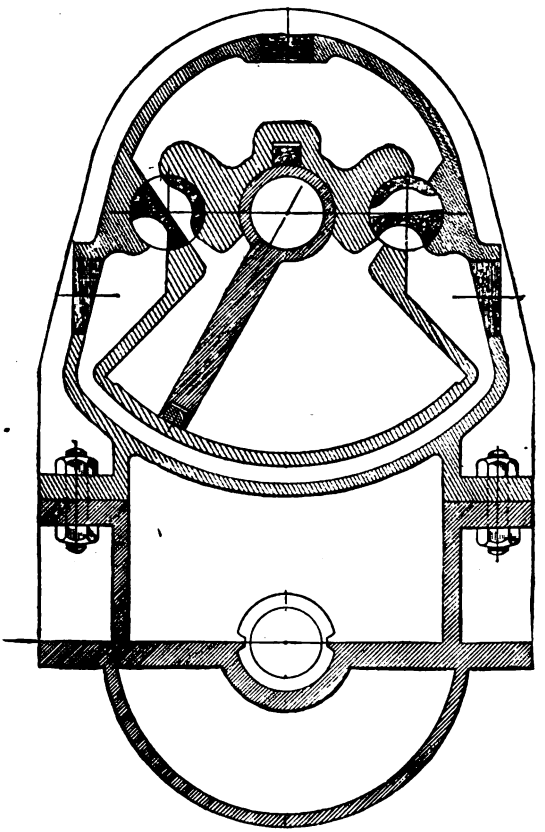

FIG. 48.

tne beam-engine. This design was proposed many years ago by Captain Ericsson.

A more usual form of engine in which a vibrating-pressure organ forms a part is that presented in Fig. 49. This shows a disk *B* against whch press six single-acting pistons which

receive steam upon their right-hand ends only. The left-hand ends bear upon the vibrating disk, which receives a rolling vibrating motion around a spherical joint at *D*. It will be seen that the axis *F* of the rolling disk will describe a cone. As the disk revolves, its conical motion can be made the motion which turns the crank *G* of the shaft *H* of the engine. The valve of the engine is of the simplest construction, since

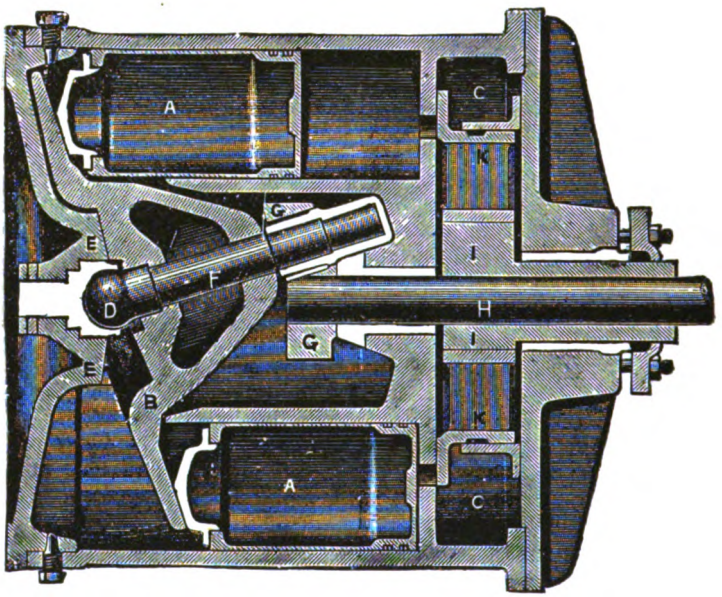

FIG. 49.

it can be a simple disk which travels with an eccentric motion around an eccentric *I*. The form of mechanism described by Rankine under the name of Hunt's Z-crank engine is a design of similar character (Rankine's "Machinery and Mill Work," edition of 1876, page 273).

33. Sundry Special Mechanisms.—A final class must be made in order to include certain forms of mechanisms which have been proposed and received a certain amount of development and which are departures from the typical mechanisms discussed hitherto. The first will be a form of three-cylinder

engine (Fig. 50), which is usually a trunk design and single-acting upon three cylinders in succession. This arrangement

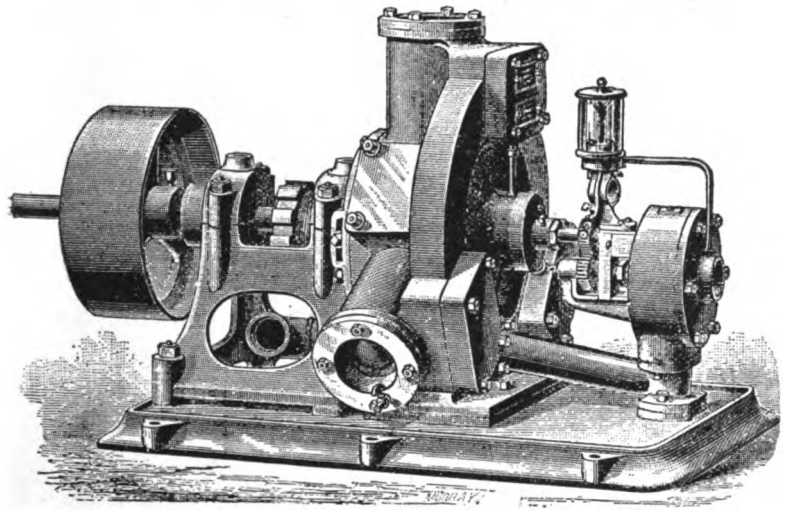

STATIONARY ENGINE.

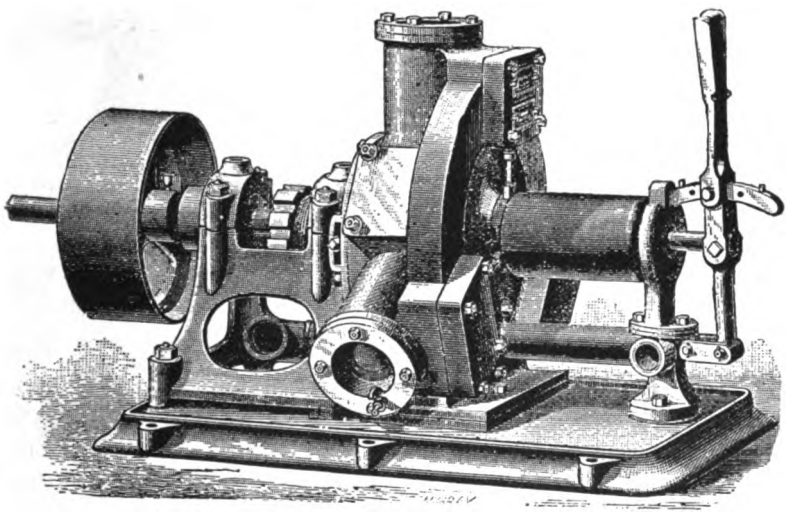

EVERSING ENGINE.

FIG. 50.

produces an equal turning effort with little or no fly-wheel weight, but will obviously be limited to relatively small sizes.

A four-cylinder design with the axes either parallel or at right angles in pairs and with the cranks quartering is presented in Figs. 51 and 52. It will be seen that these offer the same advantages for small sizes as the three-cylinder arrangements.

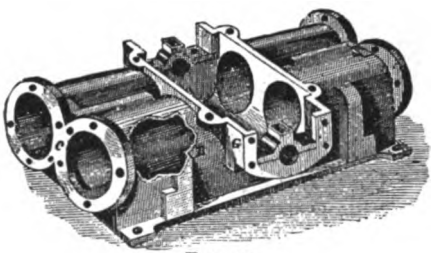

FIG. 51.

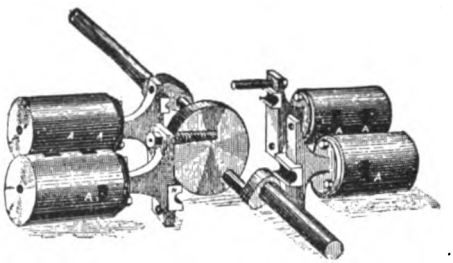

FIG. 52.

A design of engine aiming to balance the reciprocating weights around the crank-pins upon one shaft is shown by Fig. 53. It will be seen that the upper piston will always be ascending when the lower one is descending, and *vice versa*, equalizing the effect of gravity and rendering it unnecessary to balance the living force of such reciprocating parts by a revolving counterbalance on the shaft. While the figure shows the design of a vertical engine, the same principle holds and is applicable in horizontal arrangements. A form of four-cylinder compound locomotive has been proposed which embodies these features of balancing the reciprocating parts without extra revolving weight.

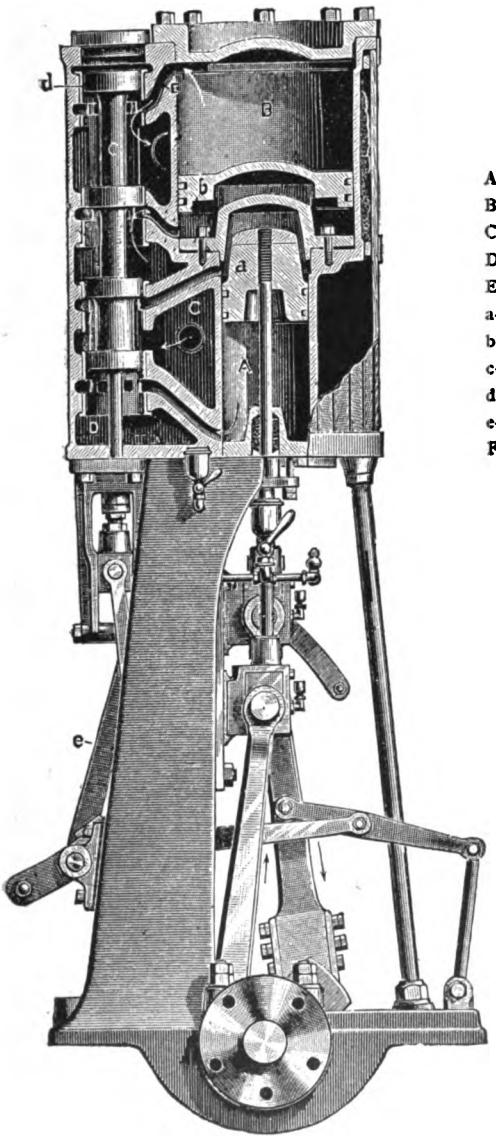

DESCRIPTION.

A—The high pressure cylinder.
B—The low pressure cylinder.
C—The steam chest.
D—The receiver.
E—The exhaust passage.
a—The high-pressure piston.
b—The low pressure piston.
c—The piston valve.
d—The valve casing.
e—The reversing lever.
F—Crank-shaft.

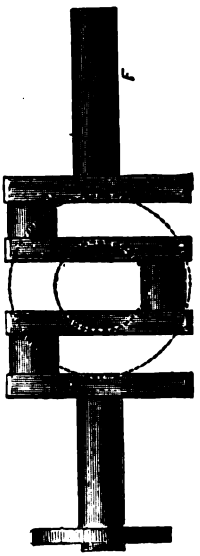

FIG. 53.

CHAPTER III.

CLASSIFICATION OF ENGINES BY THEIR USE OF STEAM.

34. Introductory.—The previous chapter has discussed the different classes of engines from the standpoint of their mechanism by which the expansive effort of the steam produced rotation at the crank-shaft. It is obviously possible to use the steam according to any of the methods to be discussed in this chapter with any of the arrangements of mechanism discussed in the previous chapter, thus making a large number of combinations possible. The five classes of engines to be discussed in the next chapters are as follows:

1. High-speed, low-speed, and moderate speed of rotation or of piston.
2. Single- and double-acting.
3. Expansive and non-expansive.
4. Condensing and non-condensing.
5. Single or compound or multiple expansive.

35. High-speed Engines.—It will be recalled, par. 6, that the horse-power of an engine-cylinder is given by an equation of the form

$$\text{H. P.} = \frac{PALN}{33{,}000}.$$

It will be apparent that where the given horse-power is to be secured and the mean pressure P in the above formula is fixed by convenience or for other reasons, both A and L can be diminished as N increases, which denotes the number of reciprocations of the piston in the cylinder, which number is twice the number of revolutions in the assumed type. Where this practice is followed the engine has a high rotative speed

or makes a large number of revolutions per minute. The consequences of this are:

1. The engine has a small cylinder-volume because it fills that volume frequently each minute.

2. The small cylinder-volume both in length and diameter means an engine light in weight.

3. A short length of cylinder means a small crank-arm, a short connecting-rod, and an engine short in length. These three conditions are the same as to say that to increase N diminishes both weight and bulk with a given power. P also has no weight.

4. When the engine makes a high number of revolutions per minute each revolution is made in a fraction of a second, and consequently a variation of either effort or of resistance is more promptly met, and is less noticeable as compared with the mean effort or resistance of any given minute

5. The regulating mechanism partaking of the rapid rotative motion produces its effect to equalize effort and resistance in a less interval of time than with the slower-moving types.

36. Low-speed Engines.—It happens frequently that the resistance to be overcome imposes a limit upon the number of reciprocations or revolutions desirable per minute. This condition is met in pumping-engines, blowing-engines, and paddle-wheel marine-engines, and is one reason why these engines appear usually of large dimensions. It will be apparent, however, that the product LN of the formula representing the feet through which the effort of the steam moves in one minute, and which is called the piston-speed of the engine, can be made large without increasing N. This results in what are called long-stroke engines, of which examples have appeared hitherto in the types of marine beam-engines.

The advantages of the low rotative speed with high piston-speed are the avoiding of the disadvantages belonging to the short-stroke high rotative-speed engines discussed in a previous paragraph. The disadvantages of the high rotative-speed types are:

1. The rapid alternating of admission and suppression of steam through the ports to the cylinder compel large port-areas in the design of such engines.

2. The rapid motion of the piston compels a generous allowance at each end between the piston at its dead-centres at the heads of the cylinder.

These two conditions create a clearance-volume of the cylinder at each end which is filled many times a minute with steam which escapes at the exhaust without doing work. The clearance-volume will be the area of the piston multiplied by the allowance length, which is usually a small fraction of an inch. That length and volume will be a greater percentage of a short cylinder than the same length and volume will be in a long cylinder, and it is filled and emptied more frequently in the high-speed engine.

3. Where the stroke is short the surfaces traversed are traversed more frequently and therefore the wear per unit of surface will be greater. This holds true for wear at all rubbing surfaces.

4. The concentration of friction and pressure upon small areas frequently in action upon each other compels very close attendance upon such engines, because heating and abrasive wear goes on with great rapidity when once allowed to begin, from the very circumstances of the case. These two conditions increase the possibility of expense for maintenance and repairs for this class of engines.

5. These conditions of concentration compel lubrication of such engines to be copious to a wasteful degree for safety.

6. The foregoing conditions compel a standard of workmanship in the matter of fitting, alignment, and provision for wear which make high-speed engines costly to build and successful only when very well made.

These objections to the high rotative-speed steam-engine are the considerations which point to either a moderate or low speed of rotation as that to be desired when circumstances permit.

37. Figures of Piston-speed in Feet per Minute.—Since

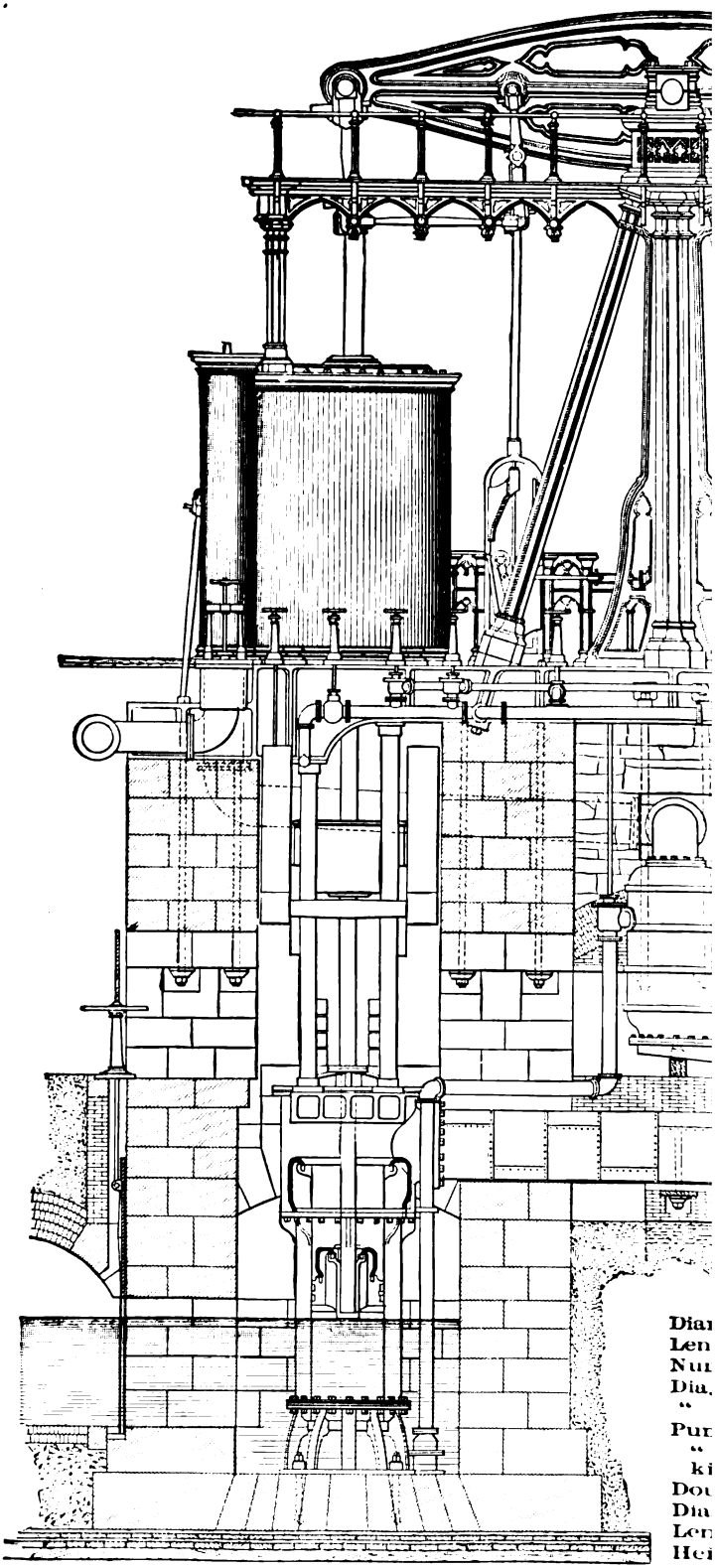

Dia
Len
Nu
Dia,
"
Pu
"
ki
Do
Dia
Le
He

FIG.

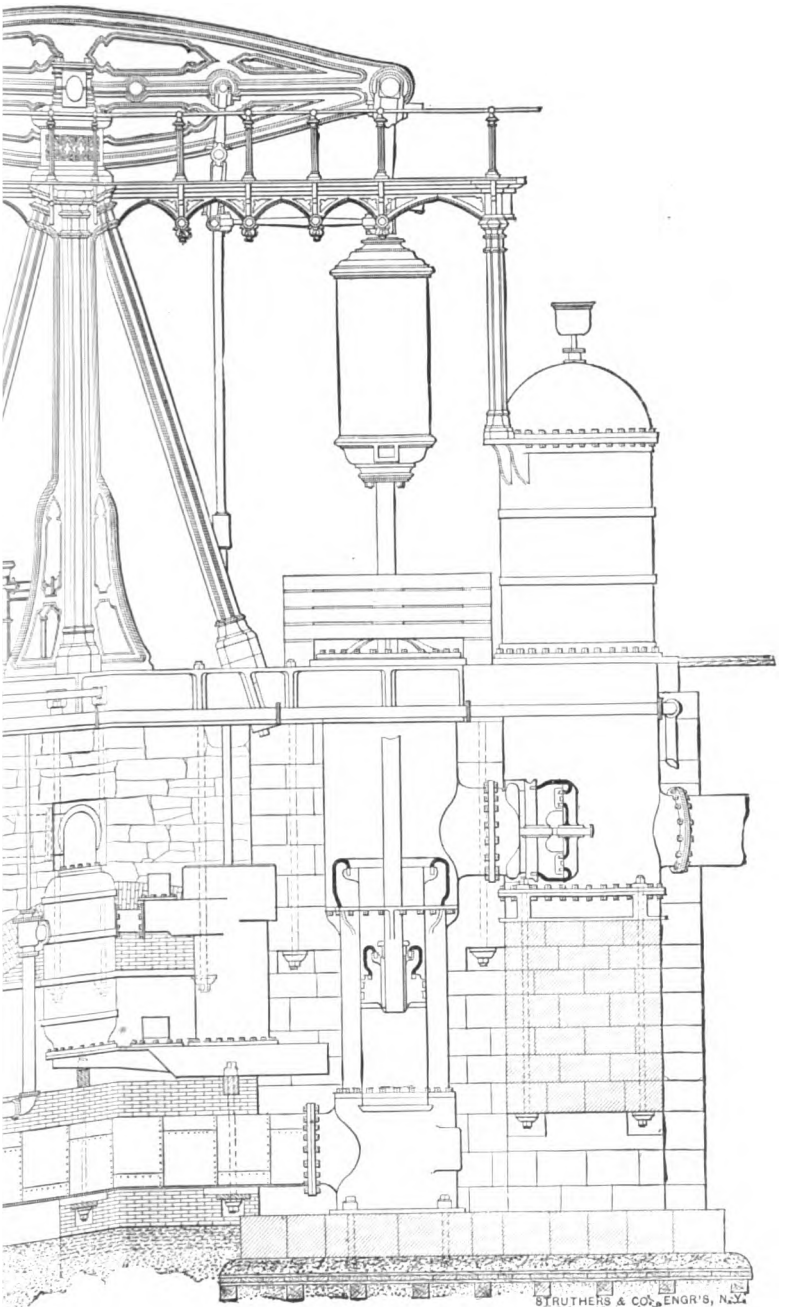

Diameter of Cylinder	90"
Length of Stroke of Piston	10'
Number of Pumps	2
Dia. of Working Barrel	36"
" " Auxilliary Barrel	54"
Pump Stroke	10
" Valves of the double-beat kind	
Double-acting Air Pump	
Diameter of Air Pump	8'
Length of Stroke	5'
Height of centre of Beam above level of Floor	26'3"
Length of Beam between end centres	30'
Depth of Beam in middle	7'2"
Average thickness of Web	0'6"
Diameter of Air Chamber	6'6¼"
Height of Air Chamber	25'4"
" " " " above Floor	13'10"
Total weight of Engine, Boilers and Appurtenances	440 Tons

FIG. 60.

the product LN of the horse-power formula is made up of two factors, a very wide number of combinations is possible. When LN is expressed in feet and their product is less than 500 feet per minute, the engine would be called a low-speed engine. Between 600 and 800 feet per minute is a moderate piston-speed, and above 900 feet is a high piston-speed. Many forms of valve-gear preclude the use of high rotative speed, and are best run at speeds not higher than 100 revolutions per minute. Engines for electric lighting with suitable valve-gear can be run above 200 revolutions per minute; locomotives usually exceed 300. Attempts to run engines of considerable size faster than 400 revolutions per minute have not been altogether satisfactory.

38. Double and Single-acting Engines.—When the pressure of the steam is alternately exerted on the one side and the other of the piston, the engine is said to be double-acting. When that pressure is exerted on the one side only, to push the piston in one direction only, and some other force or stored energy is exerted to bring it back, the engine is called a single-acting engine.

Historically the first engines were single-acting, having their cylinders open to the atmosphere on one side. The steam entered at the closed end and displaced the piston, was then condensed, leaving a vacuum behind, and atmospheric pressure forced the piston back to its starting-point.

The single-acting engine is only half as powerful for a given cylinder-volume as the double-acting engine of the same size. It offers, however, certain advantages.

39. The Cornish Engine.—A form of pumping-engine, single-acting in type, was early applied at mines in Cornwall, England, and has had a considerable popularity for water-works uses and for deep-mine conditions—for the latter by reason of its convenient solution of the problem of massive pump-rods. The Cornish engine appears in two forms. The beam Cornish engine has a vertical cylinder from whose top the piston-rod passes to one end of a beam pivoted at its centre, Fig. 60, to whose other end, (which in mine-pumps

usually hangs over the mouth of the shaft), are attached the pump-rods. The Bull Cornish, from the name of its first adapter, has the piston-rods coming out of the bottom of the vertical cylinder and directly attached to the pump-rods. This compels the cylinder to be located over the mouth of the shaft or above the plungers. In some French designs of Cornish engines the beam is placed below the cylinder, but in either arrangement of the beam-engine the working-stroke is the descending stroke of the piston in the cylinder, and in the Bull engine the working-stroke is the upward stroke. The Cornish pumping-engine has no fly-wheel, and depends for the control of its motion upon the resistance offered by the water and the combined effect of the admission and compression of the steam in the cylinder at the two ends of its traverse.

40. Operation of the Cornish-engine Cylinder.—The cylinder of the Cornish engine has three valves (Fig. 61):

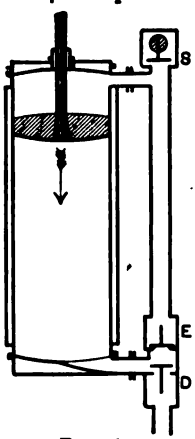

FIG. 61

1. The inlet-valve (*S*), admitting steam.

2. The exhaust-valve (*D*), allowing steam to escape, usually to the condenser.

3. The equilibrium-valve (*E*), opening and closing a pipe or passage between the upper and lower ends of the cylinder above and below the piston when at the upper or lower end.

The steam-valve and the exhaust-valve will be at opposite ends of the cylinder, the steam-valve at the bottom of the Bull engine and the top of a beam-engine. The cycle of operation will be as follows: The massive pump-rods being at the bottom of their motion and the piston at the corresponding end of its cylinder, the steam-valve will be opened and the exhaust-valve opened while the equilibrium-valve remains closed. The pressure of the steam overcoming the weight of the rods, the piston will move and the rods will be lifted. The admission of steam will cease at such a point in the stroke as is indicated by calculation and experiment, in

order to impart to the rods sufficient living force to carry them to the end of their stroke. The exhaust-valve will close before the piston completes its stroke, so as to shut in between the piston and the head of the cylinder sufficient steam to form an elastic cushion strong enough to arrest the piston before it strikes the head.

Safety-catches or buffers were usually supplied in old engines to prevent this accident mechanically if the steam should fail to serve.

The massive pump-rods being now at the top of their stroke, the third or equilibrium valve is opened, permitting the steam to pass through it on its passage to the other side of the piston so as to produce equilibrium of pressure on both sides. The weight of the rods causes them to descend, displacing the water to be pumped with a speed, which is controlled by the valves of the pump, and by the extent of the opening of the equilibrium-valve. Both steam- and exhaust-valve are closed during this equilibrium stroke, and the equilibrium-valve should itself be closed before the end of the stroke, so as to compress the steam between the piston and the head, cushioning the piston and filling all clearances with steam at inlet pressure. The cycle begins anew by the opening of the inlet- and exhaust-valves for the next stroke. It should be observed that the work of the Cornish cylinder is the lifting of the rods, and the pumping operation is performed by the descent of the lifted rods. In water-works engines where length of rod is lacking to overcome a considerable head of water, an extra weight of metal will be added to the necessary bulk of the water-plungers (Fig. 60).

41. **Cataract of the Cornish Pumping-engine.**—The Cornish pumping-engine requires a special mechanism to operate its valves. In common with all engines which lack a rotative shaft with fly-wheel and energy stored in it, it will come to rest at the end of its stroke with its valves closed and consequently will not reverse.

The energy stored in a rotating fly-wheel will carry the engine past its centre and open the valves immediately for the

reverse stroke. If it is desired to have an interval between strokes, the energy to open the valves must be stored in some other way. The most convenient and usual device for this purpose is to have a weight lifted by the working stroke, whose descent shall be controlled by the rapidity with which water will escape through an orifice whose size can be graduated. Fig. 62 will illustrate this device, which is usually called the cataract. On the ascent of the plunger, *P*, in the barrel on the working stroke of the main rods water flows in through the inlet-valve, *O*, but can only flow out slowly through the small cock or faucet, *A*, and will therefore take a perceptible time to allow the plunger to reach the bottom. The main pump is meanwhile at rest. The descent of the plunger, *P*, either opens the valves directly or releases detent mechanism whereby the valves are permitted to be opened by another force.

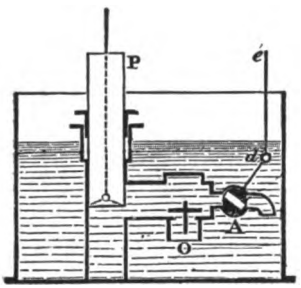

FIG. 62.

It will be seen that this arrangement permits the Cornish pumping-engine to make a relatively small number of strokes per minute with intervals of rest between, or the strokes can be made as frequently as with the ordinary rotative mechanism. The cataract principle, using a spring instead of the weight of the plunger, has been applied to operate the valve mechanism of horizontal direct-acting pumps. As such engines are double-acting, the graduating-valve will be in a connection which joins the two ends of the cataract-cylinder, and the plunger is replaced by the piston which fits that cylinder. It is obvious that in either case work is stored by the working stroke of the main engine and given out as desired after the main engine is at rest.

42. Advantages and Disadvantages of the Cornish Pumping-engine.—The primary advantage of the Cornish pump is that the motion of the water through the valves and pipes is made the controlling element. Large masses of water

can only be accelerated as demanded by crank motion at the expense of considerable work which is unprofitably expended. Second, the masses of the pump-rods serve as a reciprocating fly-wheel. Third, the single-acting principle of working enabled the Cornish pump to work with much greater economy than less carefully designed pumping-engines belonging to its earlier period. The duty of the best grade of Cornish engine stated in the usual form has been about 100,000,000 pounds of water raised one foot high by the combustion of 100 pounds of coal. Fourth, its ability to work successfully with a very small number of strokes per minute.

The disadvantages of the Cornish pumping-engine are, first, being single-acting it is bulky for a given number of foot-pounds of work. The mean pressure in the cylinder cannot be high, because at the end of the stroke all living force of the reciprocating parts must have been given out. Second, having no crank to limit the stroke of the piston, there is the danger from overstroke either up or down. If from any cause the pump-barrel fails to fill with water, the massive rods descend unchecked, and their living force under these circumstances will wreck the engine. Third, the bulk of the cylinder and the masses attached to the piston compel an expensive and massive foundation greatly in excess of that required by an engine of a different type to do the same work. Fourth, the intermittent action of the cylinder compels very careful provision to keep it warm between strokes, and in spite of all care condensation will be considerable.

43. **Single-acting Rotative Engines.**—The demand for an engine of high rotative speed for electric-light and power service which shall be able to be cheaply built with respect to fitting, alignment and wear has attracted engine-builders to the single-acting principle. In this type, and particularly with an inverted cylinder and trunk-engine mechanism with the energy of the steam acting with gravity downwards upon the upper side of the piston, it is brought about that the effort of the steam through the mechanism is in one direction only. Hence silent running is secured at high rotative speed because

the strain on the crank-pin is never reversed, which will be the occasion for knock or pound in a double-acting engine upon passing the centres, unless the adjustment and fitting are very perfect and the adjustment of the valve-mechanism just right. The danger of overheating bearings is lessened when the adjustment of fits is of less moment, and it furthermore becomes a matter of less risk to make use of high initial

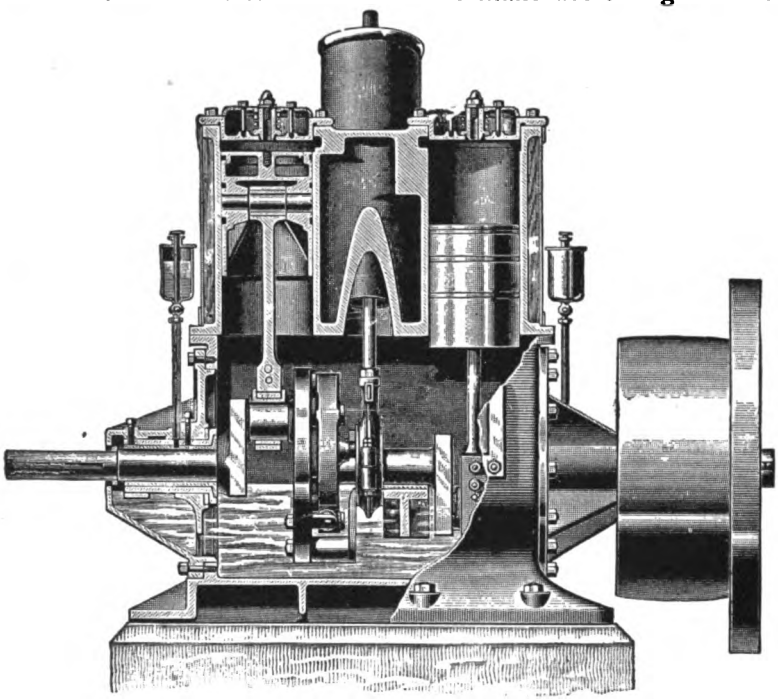

FIG. 63.

steam-pressure in the cylinders. Continuous action is secured by putting two cylinders to act upon the same crank-shaft. The two best-known single-acting engines of the rotative type are the Westinghouse and the Willans. Fig. 63 shows a longitudinal section and Fig. 64 a transverse section of the Westinghouse standard engine, and Fig. 65 a section through the Willans cylinders. The trunk-mechanism is clearly manifest in both designs, and the principle which they both repre-

sent of securing self-lubrication by having the crank-shaft revolve in a closed casing which is filled with water on the surface of which floats lubricating oil. The use of pistons of different diameters is very convenient in engines of this type, and will receive discussion in the sequel. These engines may have rotative speeds between 250 and 500 revolutions per

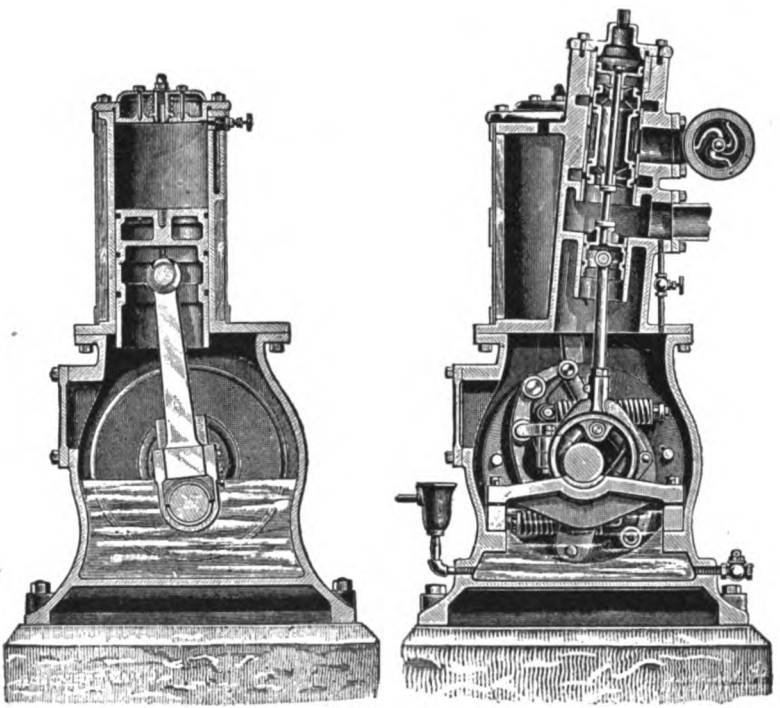

FIG. 64.

minute without difficulty, and have been quite a little used where it was desirable to couple the armature of electric dynamos directly to the engine-shaft. The Willans engine-section shows the characteristic central valve within the hollow piston-rod.

44. Expansive and Non-expansive Working of Engines.—The third subdivision of engines under the classification now being examined is the division of engines into two classes,

according to the manner in which they utilize the elastic tension of steam which is given to it by heat. If the length

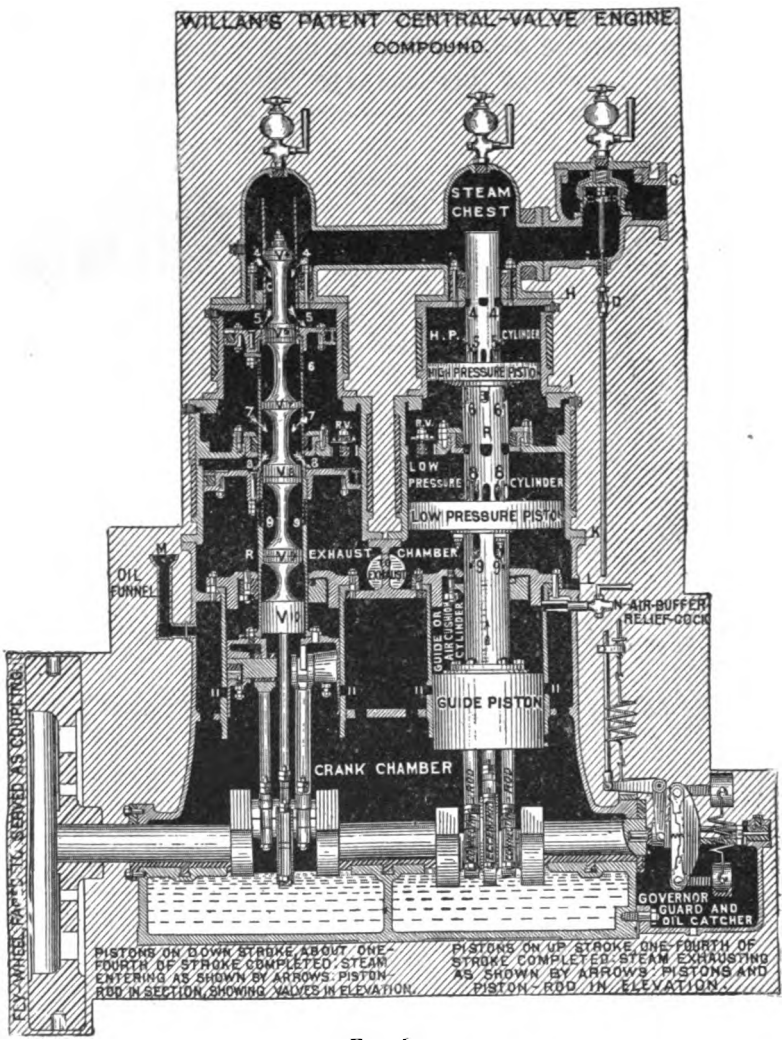
WILLAN'S PATENT CENTRAL-VALVE ENGINE
COMPOUND
STEAM CHEST
H.P. CYLINDER
HIGH PRESSURE PISTON
R.V.
LOW PRESSURE CYLINDER
LOW PRESSURE PISTON
EXHAUST CHAMBER
OIL FUNNEL
AIR-BUFFER RELIEF-COCK
GUIDE OIL AIR CHAMBER CYLINDER
GUIDE PISTON
CRANK CHAMBER
GOVERNOR GUARD AND OIL CATCHER
FLY-WHEEL PART TO BE SERVED AS COUPLING
PISTONS ON DOWN STROKE, ABOUT ONE-FOURTH OF STROKE COMPLETED; STEAM ENTERING AS SHOWN BY ARROWS. PISTON-ROD IN SECTION, SHOWING VALVES IN ELEVATION.
PISTONS ON UP STROKE, ONE-FOURTH OF STROKE COMPLETED; STEAM EXHAUSTING AS SHOWN BY ARROWS. PISTONS AND PISTON-ROD IN ELEVATION.

FIG. 65.

of the rectangle shown in Fig. 66 represent the stroke of the piston in a cylinder on any convenient scale of feet, and the

height of the rectangle represent on any convenient scale the pressure in pounds per square inch due to the elastic tension of the steam working in that cylinder, it will be at once apparent that the area of that rectangle, being the product of the base multiplied by the height, will be the foot-pounds exerted on each square inch of that cylinder in that stroke. As thus represented, the steam from the boiler passed into the cylinder during the entire stroke at the constant pressure prevailing in the boiler, and the volume which that steam

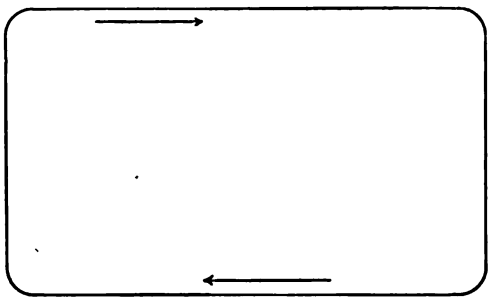

FIG. 66.

occupied in the boiler has been replaced by the vaporization of an equal weight of water to supply its place. The effort of the steam is the same at all points of the stroke, and at the end of the stroke, when the piston is to reverse, this steam must be allowed to escape as exhaust-steam with the pressure at the beginning of such exhaust equal to the pressure in the boiler, and carrying with it as many units of heat as are represented by the weight of that steam in pounds multiplied by the degrees of heat required to heat the water to the point at which it began to make steam, and then to make that weight of water into steam at that pressure. Such an engine is said to work without expansion, or non-expansively. It represents the conditions under which the great majority of single-cylinder direct-acting pumps work, and a good many elevator engines.

The diagram Fig. 67 shows the pressure upon the piston of a typical engine of the other class working its steam

expansively within the cylinder. If the length of the bottom line of the diagram represent the length of the stroke in feet to any convenient scale, and the vertical ordinates the pressure on each square inch of the piston at a similar convenient scale, it will appear that the steam flowed into the cylinder from the boiler from the beginning of the stroke until the piston had moved through a distance represented by the short upper line, and that at this point the pressure began to fall, and fell continuously until the end of the stroke was reached. The pressure at the end of the stroke is represented by as many

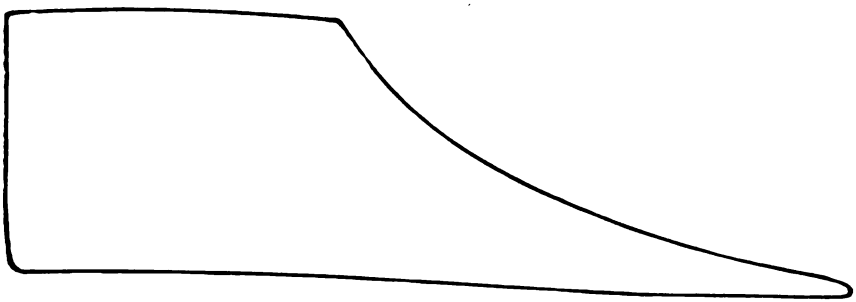

FIG. 67.

pounds to the square inch as there are units of the pounds scale in the vertical height at the end of the diagram.

The drop of pressure at the point on the upper line where the curve begins was caused by the closure of the valve admitting steam to the cylinder. This closure is called "cut-off" of the steam, and the volume of steam admitted to the cylinder during the part of the stroke represented by the straight upper line was expanding without admission of fresh steam from the boiler during the rest of the stroke, doing work upon the piston, and losing both its pressure and its heat in such expansion and work. The evaluation of these changes belongs to the science of thermodynamics, but for the present purpose it is apparent that the force upon the piston was growing less and less from cut-off to the end, but also the heat to be rejected by the engine at exhaust and the energy still

resident in the steam are both much less than in the non-expansive diagram, such as illustrated in Fig. 66. In engines with fly-wheel the living force stored in its mass during the first part of the stroke can always be made to compensate for the diminishing energy from expansive working, although a slightly larger cylinder-volume is required than when working non-expansive. The great gain in expansive working from diminishing the amount of heat rejected at exhaust has made the expansive method of working practically universal where circumstances admit.

Another method of stating this principle may be used. Referring to par. 3, in which each unit of heat corresponds to 778 foot-pounds of work, the weight of steam Q entering the cylinder during that part of the stroke represented by the straight npper line and having the temperature due to its pressure represented by T_1 will be able to do an amount of work in foot-pounds represented by the product $QT_1 \times 778$. At the end of the stroke, the same weight of steam Q escapes from the cylinder at the reduced pressure, whose temperature will be represented by T_2. The potential energy in foot-pounds represented by that steam at that temperature is therefore rejected, and hence the work which has been done upon the piston will be given by the equation

$$W = (QT_1 778) - (QT_2 778).$$

The efficiency of any device or appliance is the fraction whose numerator is the work actually done, and whose denominator is the work supplied or theoretically to be expected of it. The efficiency, therefore, of the steam in the engine-cylinder will be an equation of the following form:

$$E = \frac{QT_1 778 - QT_2 778}{QT_1 778}.$$

The second member of this equation can be simplified by dividing all terms by $Q \cdot 778$, which are factors common to

them all, so that the equation for the efficiency can be simplified into the form

$$\text{Efficiency} = \frac{T_1 - T_2}{T_1}.$$

From this it appears that the efficiency of the fluid used becomes greater as the difference between the initial and final temperatures or the pressures belonging to such temperatures becomes greater; and furthermore can only become unity when the final temperature is the value which belongs to an absolute absence of heat-motion of its particles—a condition which is not realizable in practice.

The only objection to expansive working appears when it is carried a little further than is wise in one cylinder. In this case the walls of the metal cylinder are cooled with the cooling of the steam within it to a point below the temperature belonging to the entering steam. The consequence is that on the beginning of the following stroke the hot steam has to heat up the metal of the cylinder to its temperature before it can produce pressure. Some of it is condensed itself in this process of heating the metal, and either becomes incapable of doing work or else is re-evaporated into steam during the reduction of pressure at the expansion period and cooling the cylinder and the steam by the abstraction of the heat required to vaporize it. In the first case more steam is used per horse-power than is accounted for by the volume of steam apparently present per stroke, and in the second case the cooling of the metal of the cylinder aggravates the loss at the initial condensation. This phenomenon is called "internal condensation and re-evaporation in the cylinder." It occurs even in non-expansive working, and is not to be altogether avoided. It imposes, however, a limit to carrying the expansive principle too far.

CHAPTER IV.

CONDENSING AND NON-CONDENSING ENGINES.

45. Introductory.—In the diagrams shown in Figs. 66 and 67 the lower line or base-line from which pressure will be measured is the line of atmospheric pressure. This, however, is not the line of no pressure, inasmuch as the pressure corresponding to the one atmosphere at sea-level is the pressure of 14.7 pounds on each square inch of area. The line of perfect vacuum on the exhaust side of a piston should therefore be drawn at a distance below the atmospheric line equal to 14.7 units of the scale of pressure.

It is entirely possible so to arrange the working of the steam that, after having done its work in the cylinder, instead of escaping into the atmosphere at a pressure of 14.7 pounds above vacuum it shall escape into a vessel or reservoir within which that vacuum is maintained. Since by far the most convenient method to secure a vacuum is to condense the steam which fills a given volume back into the condition of water, engines operating on this principle of exhausting into a vacuum have been called condensing engines. Where the steam escapes or exhausts from the cylinder into the atmosphere the pressure in the cylinder never falls quite to the pressure in the atmosphere, when there is any friction due to bends in the exhaust-pipe and other resistances. The steam of course ultimately condenses back to water in the atmosphere, but it does not do so in connection with the engine itself. Engines exhausting at or above atmospheric pressure are called non-condensing engines, and the full-line diagram, Fig. 68, when compared with the dotted-line diagram will

show the difference in the action of the steam doing equal work in the two cases. The lower line in the two diagrams, Fig. 68, represents the pressure on the piston on the return stroke, which may be called the back-pressure. The dotted line represents the pressure just above atmosphere, while the full line diagram shows a pressure of 14.7 lbs. below it.

The physical principle on which the condensation of steam causes the practical vacuum is that one cubic inch of water will form 1700 cubic inches of steam at the pressure of one atmosphere. If these 1700 cubic inches of steam are cooled back to water, they undergo a reduction of volume in the same

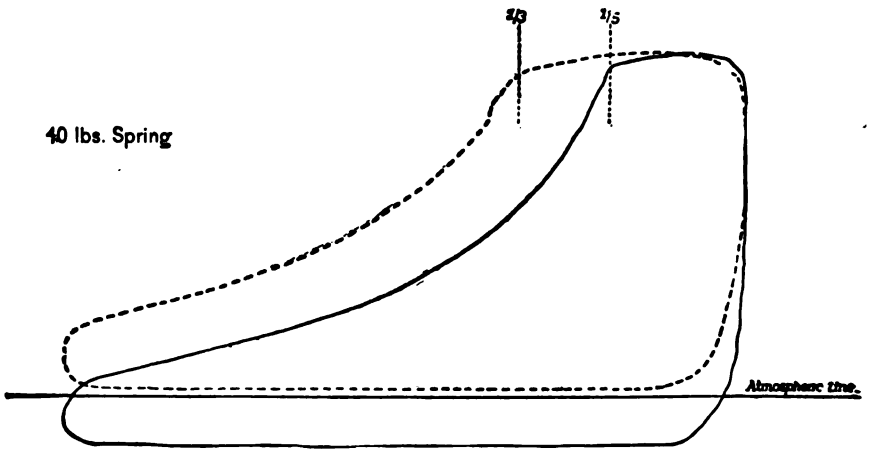

FIG. 68.

proportion less only the volume filled by the tenuous vapor which even cool water gives off in a vacuum. It will only be necessary to draw off the condensed steam by proper apparatus to enable the vacuum to be maintained which the condensation has created.

The earliest historic steam-engines of the modern period were all condensing engines. Steam at a comparatively low pressure above the atmosphere was admitted to the cylinder for the working stroke, and upon being condensed the absence of pressure represented by the vacuum upon the working side of the piston was the principal dependence for the power of

the stroke. Such engines were called low-pressure engines. When the engine did not condense so that the back-pressure line in Fig. 68 was at atmospheric pressure or above it, it was necessary that the pressure of the steam in the boiler should be correspondingly raised. Such non-condensing engines were therefore run at relatively high pressure, and were called high-pressure engines. At one time, therefore, high pressure was synonymous with non-condensing, and low pressure synonymous with condensing. This is no longer the case, since nearly all condensing engines of modern construction operate with steam at high pressure.

46. Advantages of the Condensing Engine.—The principle of exhausting the steam from the cylinder into a vacuum or at a pressure below the atmosphere offers the following advantages:

1. With a cylinder of given area, stroke, and piston-speed the net effective pressure is greater than in non-condensing engines. This is apparent by comparing the area below the atmospheric line in Fig. 68 with the absence of area below the atmospheric line in the dotted card in that figure. The area below the atmospheric line represents a work in foot-pounds done in the condensing engine which cannot be done in the non-condensing engine. Furthermore, the expulsion of the steam from the cylinder requires the expenditure of some work, whereas in the condensing engine the exhaust expands into the vacuum-chamber with great rapidity and removes back-pressure at once from the piston. The consequence of this lowered back-pressure and the work below the atmospheric line is that the engine delivers more power for a given size than the non-condensing engine. In other words, the value for P in the horse-power formula has been increased, while the other factors remain the same.

2. The other way of stating this same advantage is that the same power will be secured by a smaller cylinder with the condensing cylinder than with the non-condensing with the attendant advantages of diminished bulk.

3. The area of the diagram Fig. 68 will be proportional

to the foot-pounds of work done in a stroke. By increasing the height of the diagram, as done in the full line of Fig. 68, as compared with the dotted line, the same area is secured by diminishing the mean length. As the length of the bottom line is fixed by its relation to the length of the cylinder, there will be secured the same work in foot-pounds when the length from the right of the diagram is shortened. The length of the upper line denotes the volume of steam admitted from the boiler before the admission is cut off by the closure of the valve. By shortening this admission a less volume of steam is drawn from the boiler per stroke, and consequently less water need be supplied and vaporized and consequently less coal need be burned. In other words, the condensing engine requires both in theory and in practice a less amount of coal per horse-power per hour.

4. Since the pressure in the cylinder varies practically inversely as the volume, it follows that a given volume of steam admitted up to the point of cut-off will expand to a lower final pressure and still keep up a positive effort upon the cylinder in the condensing engine, as compared with the non-condensing. The consequence of this is that when the steam is rejected from the cylinder at the end of the stroke of the piston in the condensing engine, less heat is rejected than where such steam escapes at a temperature represented by a pressure above the atmosphere. In other words, the condensing engine utilizes the heat imparted to the steam by the fuel more perfectly than the non-condensing engine does.

5. This latter development is from the gain discussed in par. 44. The efficiency was there shown to increase when the temperature of rejection is lowered. In condensing engines using water for condensation in great volumes it should be practicable to bring the final temperature of the steam down to that of the usual temperature of natural water, or in the neighborhood of 60 degrees Fahr. Inasmuch as it is inconvenient to use great volumes of water, engineers are usually satisfied to bring the temperature down to 100°–130° Fahr., which is the temperature corresponding to T_1 in the efficiency

formula. In the non-condensing engine T_1 will be 212° or over. Hence the efficiency in this technical sense is greater in the condensing engine than in the non-condensing engine.

6. The condensation of the steam to the temperature of 100°–130° gives a quantity of warmed water at hand which can be used to pump into the boiler to replace what is turned out in the form of steam. This water is heated by heat which in the non-condensing engine is rejected or wasted into the air. It is an advantage of the condensing engine that it preheats the water to be fed to the boiler. This saves fuel and is of advantage to the boiler.

47. Disadvantages of the Condensing Engine—The disadvantages of the condensing engine are partly inherent and partly accidental or dependent upon the method used in applying the general principle of condensation The inherent difficulties are as follows:

1. The lowering of the final temperature and pressure of the steam lowers the final temperature of the metal of the cylinder. The effect of this cooling of the metal is to increase the amount of condensation to be expected within the cylinder (see par. 44), and thereby materially to diminish the economy which theory would indicate for the condensing engine. The diagrams of Fig. 68 give little or no intimation of the steam used in heating the cylinder, but the coal used to make this steam has to be burned and paid for. The wide range of pressure between the beginning and the end of the stroke causes the condensation of steam in the doing of work, and the vaporization of this steam cools the cylinder. The diminished range in the non-condensing engine diminishes the losses from this cause.

2. The condensing engine must maintain the vacuum created by condensation, by withdrawing the condensed water from the vessel or chamber into which the exhaust passes. The maintaining of this vacuum imposes a work upon the engine itself, or upon a separate appliance, which is not demanded by the non-condensing engine. This work is caused by the friction of the water and the work of displacing

a given weight of it, and by the friction of the pumps or other appliances used. Ordinarily, also, the water used to cool the steam must be handled at the expense of the power of the engine. If the condensation can be done by natural falling water, this difficulty does not hold.

3. The exhaust from the cylinder carries with it the oil or other lubricating material carried into the cylinder for lubricating the piston, valves and the like. The lubricating material must undergo the cooling of the condensing process, and gradually fouls and stops up the passages through which it passes, or else it goes through to be pumped back with the warmed water into the boiler. This presence of lubricating oil in boilers is a serious annoyance, inasmuch as a coating of such material on heating surfaces prevents intimate contact of water with the metal, and frequently causes the latter to become overheated and so softened as to be easily forced out of shape by the pressure in the boiler. Great care has to be taken to separate the oil from the condensed steam in the condensing engine to prevent this difficulty.

4. The condensing engine can only be used where an available quantity of water for condensation can be procured without excessive cost. This limits the application of the principle to stationary practice on land, but is a reason for the abundant and extensive use of the condensing engine for marine purposes. Condensation by air requires an enormous bulk for the condensing appliances, and where water is costly or scarce special provision must be made for using the same water over and over again. It is practically impossible to operate the locomotive as a condensing engine.

The accidental objections to the condensing engine are those dependent upon the methods used for applying the principle.

1. If the condensing apparatus is driven from the mechanism of the engine itself, the handling of water precludes the use of a high rotative speed in such engines. The engine cannot be run faster than consistent with the proper working of the pumps attached to it.

2. If the condensing engine operates its own condensing

appliances at comparatively low speeds, the weight and bulk for such appliances become inconvenient.

48. **The Condenser of a Condensing Engine.**—To transform a non-condensing engine into a condensing one, the first addition to be made is the chamber or reservoir in which the vacuum, more or less complete, is to be maintained, and into which the exhaust-steam is to pass from the cylinder. This must be an air-tight vessel, and is called the condenser. It may be placed close to the cylinder, or at a moderate distance from it if this is more convenient. Its volume relatively to the cylinder-volume will depend somewhat upon the appliances for exhausting it, but it is rarely larger than one half the cylinder-volume in any case.

The condensation of steam in the condenser is effected in one of two ways. The exhaust-steam either meets the water which is to condense it in direct contact, or the steam meets metallic surfaces which are kept cool by the circulation of the cool water in contact with them. In the first case the condensed steam and condensing water meet and mingle. The condenser is a plain closed box, and the cooling water enters it in a jet. Such direct condensers are often called jet condensers for this reason, and the water of condensation injected into the steam directly is known as the injection-water, or simply the injection. This term will be used hereafter for the water used to condense the steam by any means. When the steam is condensed by contact with cool surfaces, which are kept cool by the injection, the condensation is called indirect, and the condenser is called the surface condenser. The cooling surface is usually a surface of pipes or tubes made of brass or copper to secure rapid transfer of heat, and very often coated with tin on both sides to prevent corrosion and galvanic action. In frequent marine practice these tubes are made one-half inch in diameter. Fig. 69 shows the usual arrangement of the direct or jet condenser as used in river-boat practice where the injection comes from the water outside of the hull. It will be seen that the steam escaping from the cylinder enters the condenser at the side and near the top below a

partition which runs across the condenser. This partition is perforated with a great number of holes about one-half inch in diameter. The pipe entering the side of the condenser and working upward through the perforated partition is the injection-pipe, which comes from a suitable opening in the hull through the skin of the vessel. The injection-pipe has a valve in it, operated by a lever or by a hand-wheel (see Fig. 30), whereby the flow of injection-water can be cut off and con-

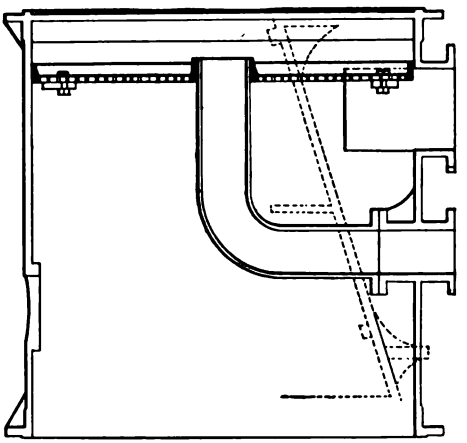

FIG. 69.

trolled. It will be apparent that if there is a vacuum in the condenser, and the opening of the injection-pipe is below the surface of the water outside of the hull, atmospheric pressure will force the injection into the condenser with considerable energy, so that the injection-valve is usually only partly open. In such river-boat engines as are presented in Fig. 30 there are usually three entrances to the injection-pipe. The usual one used will be the bottom inlet, opening through the hull near the keel and of course always under water. The second one will be the side inlet, which will be used only when such shallow water is to be feared that there would be danger that the bottom inlet would draw in mud or become stopped with solid matter. The third inlet will be from the bilge of the boat, and will be called the bilge-injection. It will be used

only when from a leak or an accident an excess of water has come within the skin of the vessel, so that the propelling engine can be used to empty the bilges and lighten the duty of the bilge-pumps proper. It will be seen that the injection descends across the exhaust-steam in a finely divided shower, whereby the least weight of water need be used. Sometimes the injection is sprayed into the steam through a simple nozzle like the rose-nozzle of a flower watering-pot. (Fig. 73.)

Fig. 70 shows the usual arrangement of the surface con-

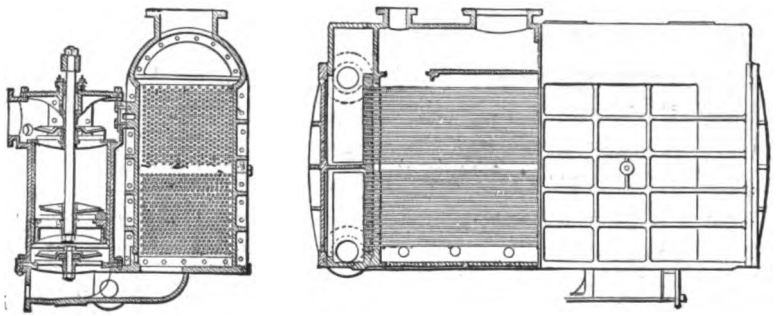

FIG. 70.

denser. There is often no cogent reason other than convenience determining the question whether the injection-water should circulate within the battery of pipes while the steam is on the outside, or whether this plan should be reversed. English naval practice adopts the latter. It is most usual in the merchant marine to have the steam on the outside, because less difficulty is met from the clogging of the condensing surfaces by the condensation of the lubricating material on the cool surfaces of the condenser, and it is easier to clean the outside of the tubes than the inside, and the tubes can be drawn through the tube-plate more easily for cleansing. The scale from sea-water used in circulation is removable without taking out the tube; tubes can stand internal pressure better than external; the water circulates better; a large surface meets the steam; the design is simple and compact; and a packing can be used which contains organic matter. For the English plan it may be said that

most of the lubricant is caught at the first tube-plate; the flat surfaces of the condenser have only upon them the light pressure of the water in circulation, and not the larger pressure of the atmosphere against the absence of pressure within; the metal of the condenser radiates less heat in the engine-room. On the other hand, packing of the tube-joints must be done by some device which will not be affected by the steam. The steam enters the surface condenser usually at

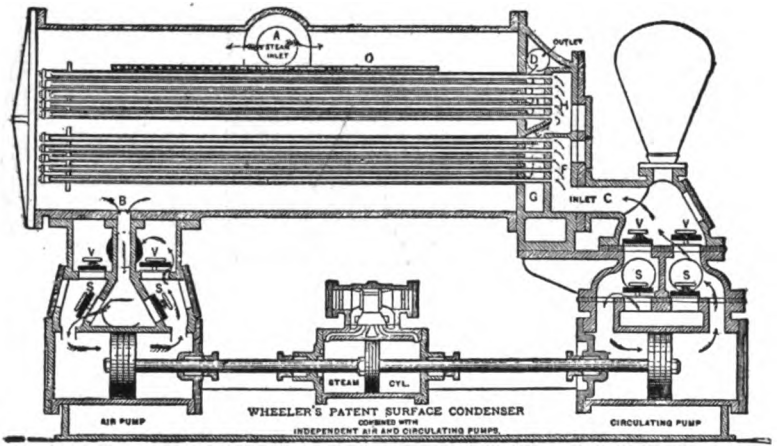

FIG. 71.

the top, and the cold injection-water enters it at the bottom and as it becomes warm in cooling the tubes it is forced upwards so as to meet the hottest steam when it is itself warmest. This plan of having the injection travel against the steam secures the greatest difference of temperatures in all parts of the condenser as a whole, and transfer of heat is most rapid with greatest difference of temperature between the body to be cooled and the absorbent material. The condensed steam gathers in the bottom. Fig. 71 shows a form of a surface condenser designed to avoid one or two main difficulties of surface condensers. By reason of the conditions to which they are exposed the tubes are subject to changes of tempera-

ture which cause them to expand and contract, and makes it difficult to keep the tubes tight where they enter the two heads shown in the previous sketch. This has been sought in the prevalent designs by making an expanded or fixed joint at one end, and at the other fixing a species of stuffing-box kept tight with compressible packing and permitting the tube to slide.

Fig. 72 presents a grouping of such methods of flexible joints.

A is Howden's wick or hemp joint.

B and *C* are Lighthall's, packed with papier-maché.

D is Winton's hard-rubber ring.

E is Spencer's rubber washers.

F is Marshall's moulded rubber joint.

G is Stimer's tube.

H is Hall's stuffing-box.

I is Chapman's joint with Babbitt-metal calking.

J is a rubber washer with lock-nut.

K is Sewell's joint, compressing rubber by a cover-plate gland.

L is Archbold's, with brazed brass wire to prevent creeping.

M is Wilson's, similar to *K* except that each tube is packed separately.

N is Horatio Allen's soft wood packing.

Q is Todd's method.

The joints from *A* to *I* do not permit the removal of the tube without having to be themselves renewed. The cover-plate plan *K* packs all tubes at once.

The Wheeler condenser, shown in Fig. 71 and in detail at *P* in Fig. 72, secures the tube tight in one end only by screwing, and the circulating water, instead of passing through the tube completely, is made to flow through the closed tubes by means of the smaller inner tube which is not attached directly to the outer. The difficulty from the tube-joints was a very serious obstacle to their first introduction on sea-going vessels. Their use now is universal, since this difficulty has been overcome.

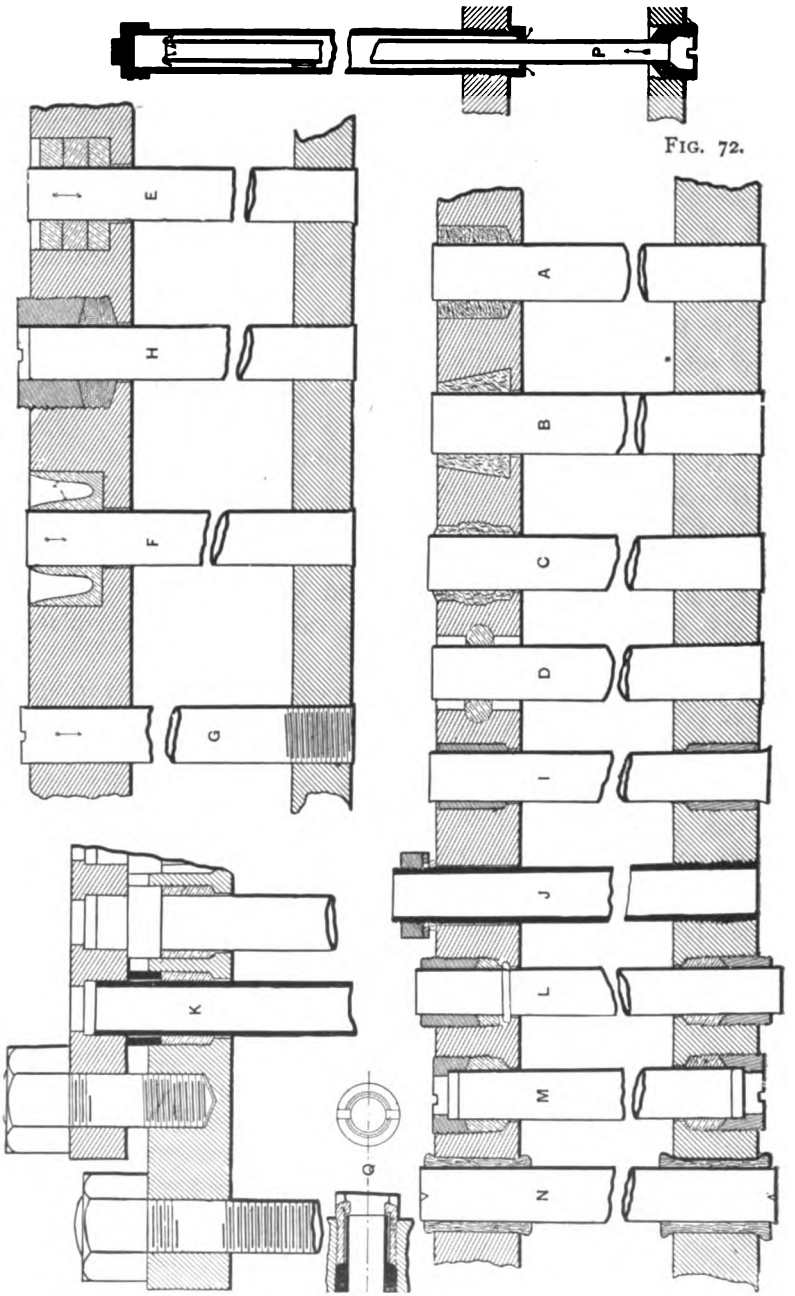

FIG. 72.

49. Jet and Surface Condensers.—It will be observed that the jet condenser acting directly upon the steam with the injection will make a given lowering of the temperature of the exhaust-steam with less weight of water and with less bulk and weight of condenser. From twenty to thirty times the weight of steam to be condensed must be used as injection in cool seasons or climates, and from thirty to thirty-five times with warmer water. On the other hand, if the condensed steam is to be pumped back into the boiler the injection-water goes with it, and consequently the injection must be pure water and not objectionable for use in boilers.

The surface condenser, while more heavy and bulky to handle and cool a given weight of steam discharged as exhaust, can be used with any water whatever as to quality. The condensed steam leaves the surface condenser as distilled water with no impurities in it except the lubricating oil, and is therefore a most excellent material to pump back into the boiler if the oil can be extracted from it. The surface condenser has for this reason occupied the field with vessels traversing salt water, and has furthermore a wide scope on land in places where the available water contains solid matter or salts or acids which would be injurious to boilers. The same water is used over and over again, and the only addition of bad water which has to be made to that which filled the boilers in the first place is that which is lost by leakage at safety-valves, whistles, and joints. The steam-circuit is practically a closed one. The surface condenser for sea-vessels adds from ten to eighteen per cent to the first cost of the engines, but is more economical of fuel for them than jet condensers would be.

50. The Cold-well.—In stationary practice on land the water for condensation and the injection must be supplied from a reservoir. In cities having a water-supply the city water can be used for this purpose, but ordinarily the quantity needed for a plant of considerable size will compel the engineer to consider other means. In the older designs it was very common to immerse the condenser in the tank from which the

injection was to be drawn, Fig. 73; and even where city supplies under pressure are to be had, it is preferred not to connect the condenser to the mains, but to take the injection from a tank in which the supply of pressure-water shall be controlled by float-valves or ball-cocks. The expense of city water has compelled many proprietors to sink artesian or other private wells for the purpose of controlling the necessary quantity of injection-water, but even this is expensive and

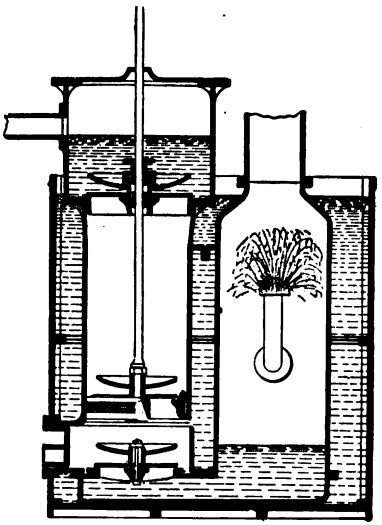

FIG. 73.

not always practicable. The tank from which the injection is taken was called by the early designers the cold-well, and latterly considerable pains have been taken to make it possible to use the same injection-water over and over again without making the cold-well of unmanageable size.

Two general methods have been followed in the solutions which have been sought for this problem. The first has been to construct a series of shallow troughs in which the warm injection-water flowed in the open air exposed to the action of the natural winds. These troughs were arranged one over the other with a slight grade, so that the water flowed zigzag

fashion from the top to the bottom, and after leaving the lower end of the latter flowed back to the well. The prolonged exposure in thin films to the vaporizing action of the open air and the cooling caused by such vaporization resulted in a considerable lowering of the temperature of the injection. The other plan, of modern introduction, is to cause the injection to descend in a closed tower in a fine state of division over tile or wire gauze arranged upon gratings or trays. A current of air forced by a fan causes a vaporization of the film of warm water pouring over the tile-surfaces, and the air-cooling and vaporization combined withdraws the heat from the injection, so that as it falls into the cold-well at the bottom of the tower it is in condition to be used again. This appliance has been in successful operation for some years, and is warranted wherever the cost of condensing water per annum without such device would exceed the interest upon the cost of the plant and the expense connected with operating it. Fig. 74 illustrates this arrangement.

51. The Air-pump and Foot-valve.—The vacuum created by condensing the steam by the injection must be maintained in the cnodenser. The condensed steam and injection would rapidly fill the volume of the condenser if no means were taken to empty it. Furthermore, all natural water and the steam contain a certain quantity of air which undergoes no condensation or reduction of volume, and whose presence in the condenser would soon destroy the vacuum created by condensation. Some means must therefore be provided to draw from the condenser the condensed steam, the injection, and the air.

There are many different methods for accomplishing this result. Referring to the typical river-boat engine, Fig. 30, it will appear that attached to the bottom of the condenser and driven from the beam of the engine is a lifting-pump having a valve in its piston or bucket. This pump is called the air-pump, and the plan of driving it from the beam or cross-head of the engine is a method which has been very generally followed in all earlier designs. It will be called the method with attached air-pump.

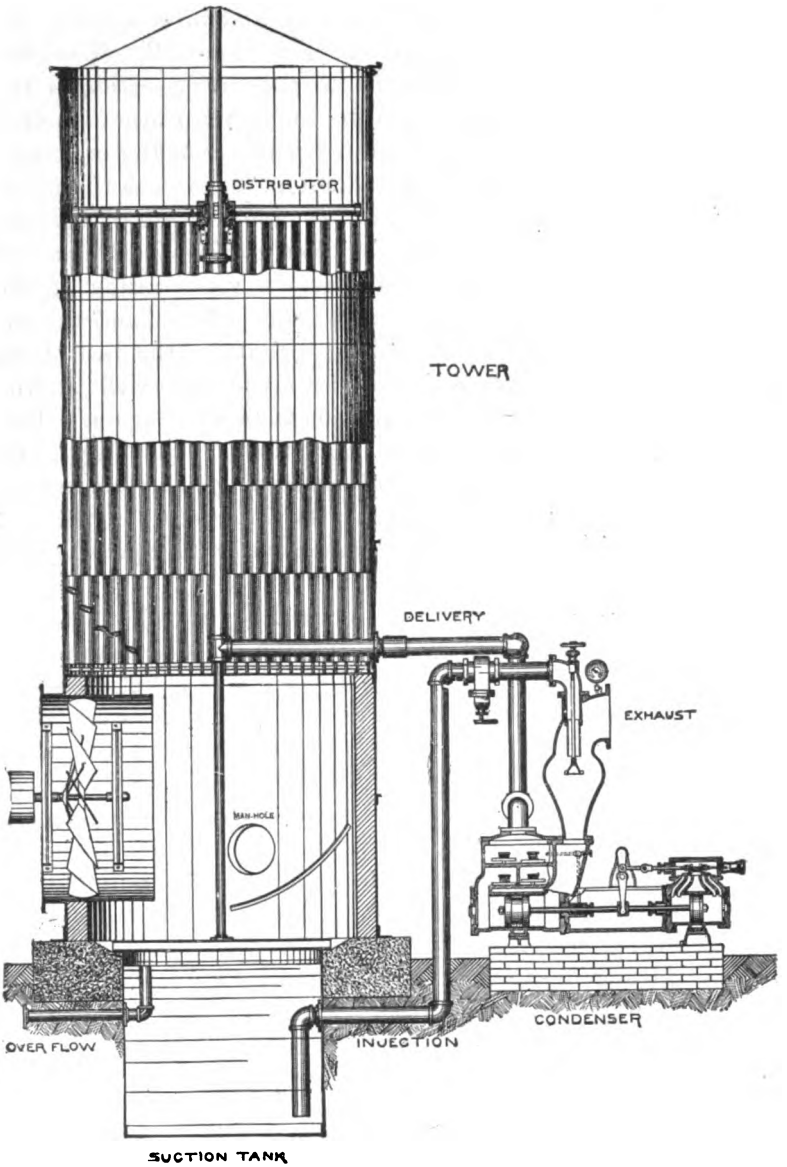
DISTRIBUTOR
TOWER
DELIVERY
EXHAUST
MAN-HOLE
CONDENSER
OVER FLOW
INJECTION
SUCTION TANK

FIG. 74.

The air-pump must be a lifting or sucking piston-pump. It must meet the difficult condition of withdrawing water and air from a vessel within which the pressure is less than the atmosphere, and therefore atmospheric pressure cannot be counted on to fill its barrel as is the case with the ordinary lifting-pump. If the piston in the air-pump in Fig. 30 be supposed to be rising in its barrel, and the bottom of that barrel opens into the condenser through the valve which separates them, it will be apparent that as long as the pressure in the air-pump is greater than the pressure prevailing in the condenser the valve cannot open. The rise of the air-pump piston must create below it a rarefaction or vacuum greater than that in the condenser before the valve will open and any equalization of pressure occur. Furthermore, the water in the bottom of the condenser will only flow through the foot-valve of the pump by gravity, unless there is enough of it to seal the connection between the two volumes, and will then only rise in the air-pump sufficiently to counterbalance the differences in pressure. The bottom of the air-pump and the foot-valve must therefore be below the bottom of the condenser, so that the water may fall out of the condenser by gravity. When the air-pump reverses and begins to descend, the foot-valve closes and remains closed during the descent of the bucket. As the bucket goes farther down it strikes the water which has flowed from the condenser, and therefore the bucket-valve opens by excess of pressure below, and the bucket descends through the water to the bottom of its stroke. In its ascent the water above the bucket closes the valves and seals the piston while the cycle of the first stroke is repeated.

The foot-valve in most direct-driven engines is a flat rubber flap of the necessary thickness (inch to inch and a half) which seats upon a grated inclined partition. Access to this valve for renewal and repair is had through a bonnet or cap formed in the casting just over the grating. The air-pump bucket-valves are also usually circular rubber disks, which are prevented from rising too far by brass guards. They also seat upon grated openings, and are easily accessible from the

top of the air-pump. From the top of the air-pump the combined injection and condensed steam are discharged to the organ of the condensing engine which is called the hot-well.

With the surface condenser the air-pump is still required, but its function is slightly different. As the injection does not meet the condensed steam, the air-pump does not have to handle the former, but has only to draw out the condensed steam and the air which gets into the condenser with the steam and by leakage. The air-pump of the jet condenser is usually one eighth of the volume of the cylinder; that is, it is of one half the diameter and one half the stroke. In surface-condensing engines it is about one twelfth or one thirteenth of the cylinder-volume, or perhaps about one half the size for jet condensers; it is a single-acting pump in both cases.

52. The Circulating Pump.—In surface-condensing engines the handling of the injection through the tubes of the condenser is done by a separate water-pump, which is called the circulating-pump. In marine practice of sea-going vessels the water for injection is taken from overboard through a valve in the hull, is forced through the surface condenser and then outboard again. The inlet-valve is low down so as always to be below water, even in rough sea, and the outlet-valve is usually at or above the normal load water-line. The work of the circulating-pump is therefore to overcome the friction of the condensing tubes, and to lift the water through the few inches of difference of level between the water outside and the discharge-level of the overboard-valve. By reason of the small resistance and the large volume of water which are the conditions of such circulation (seventy times the volume of feed-water required by the engine), centrifugal pumps have been the very prevalent type of circulating-pumps. They are driven by their own independent engines. More recent American practice introduces reciprocating-pumps for this kind of work with satisfaction (see Figs. 71 and 75). When single-acting reciprocating-pumps are used, the volume of the cylinder is from one twentieth to one thirtieth of the steam-cylinder volume. For small launches where the quantity of

steam to be condensed makes such an arrangement practical, a form of surface condenser has been used which consists of a coil of pipe zigzagging on the outside of the hull on both sides of the keel. The steam passes through the inside of this coil of pipes, and the motion of the boat causes a continual impact of cool water against the coil and produces the same phenomena as by the circulating-pump. It has been

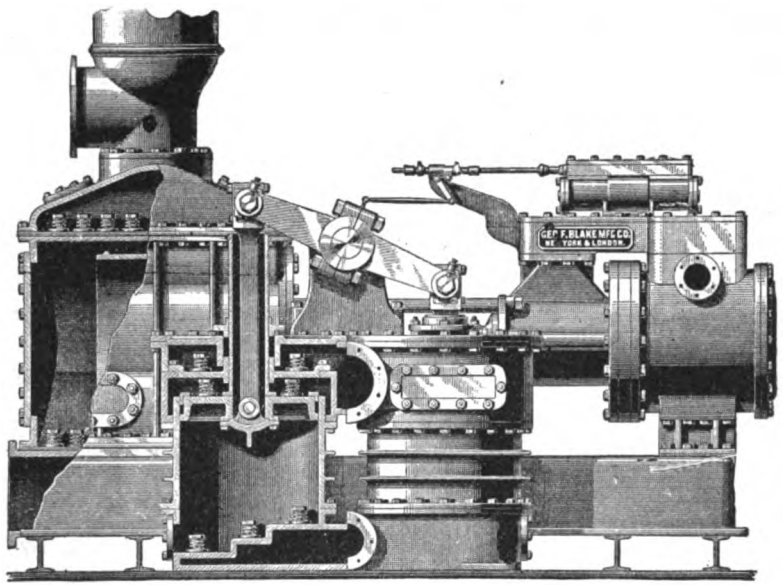

FIG. 75.

found, as might be expected, that the more rapid the motion of the vessel through the water the more efficient are such condensing coils. The extra resistance offered by such coils is the compensation for the avoiding of the circulating-pump, but in small boats it is a distinct gain to get the bulky condenser outside of the hull.

53. The Independent Air-pump.—The design shown in Fig. 30 represents the air-pump driven by the engine-cylinder attached by rods to the beam. This may also be secured in horizontal engines without beam by driving the air-pump from the cross-head as shown in Fig. 16, or from the crank as

shown in Fig. 22. Many advantages follow from abandoning the principle of the attached air-pump and driving the air-pump independently by a separate steam-cylinder, or in a shop by a belt from the shafting. This principle is called that of the independent air-pump and offers the following advantages:

1. The pump can be located anywhere. The attached principle compels the air-pump to work in the plane of the main engine if directly attached, and this may make the location for the air-pump either cramped or inaccessible or inconvenient.

2. The air-pump being independent of the main engine can be run without it. This is of advantage in starting the main engine, since the vacuum in the condenser can be created before steam is turned on to the main engine.

3. The air-pump can be run at varying speeds while the main engine is run at a constant speed. This enables the designer and runner to provide for varying temperatures of the injection-water according to the season of the year, and in marine practice according to the latitude and corresponding temperature of the ocean-water. The air-pump can further be run faster than the normal rate in case of leakage into the condenser which it may not be convenient to arrest. The vacuum will be maintained as it cannot be with the attached pump.

4. Since the air-pump can be run faster, and can usually be double-acting, it will be much smaller than the attached pump. This is a gain in bulk, a gain in weight, a gain in friction, from the lessened weight, and the small-diameter cylinder has a less clearance-volume, which is always troublesome when air is to be rarefied.

5. By detaching the air-pump, which is a water-pump as well, the speed of the main engine is not controlled by the limitations of satisfactory working of the air-pump. The high rotative-speed engine can thus be conveniently condensing.

The only objection to be urged against the independent air-pump is that the small steam-cylinder which drives it uses

steam less economically than the large cylinder of the main engine. This is not true when the air-pump is belt-driven. The necessary clearance-volume, although smaller in the independent engine, is filled and emptied more often.

The superior convenience of the independent principle has made it a feature of much recent designing. It will be seen from Figs. 71 and 75 that it is very simple to combine the air-pump and the circulating-pump for surface-condenser practice so that one steam-cylinder shall drive both pumps. This makes an arrangement which is both convenient and very economical of space.

54. The Gravity Condenser.—It early suggested itself to avail of the law that the atmosphere will not balance a column of water over 32 feet high. This makes it possible to construct a condenser which shall require no air-pump. The injection and the condensed steam can be thus disposed of, but the air in the condenser cannot. The first gravity condenser was proposed by Ransom (Fig. 76); his condenser consisted of a pot *B* into whose bottom entered the exhaust-pipe *A* from the engine, the injection-pipe *C*, and the discharge-pipe *O*. The injection was carried up through a perforated plate towards the top so that the water descended in a shower, and the exhaust-pipe *A* was protected by a shield so that water should not fall down into it. The discharge-pipe was 33 or 34 feet long, and its lower end was immersed in the water of the hot-well so that a barometric seal was secured, and with highest barometric pressure the water would only stand in equilibrium in the discharge-pipe at a level below the bottom of the condenser. The small pipes, 222 in the diagram, are short lengths within the discharge-pipe upon which the descending flow of water is to act by aspiration so as to induce currents to draw out from the condenser by this action the air which gathers in it and which lacks a barometric balance. The small pipe *H* draws the heated water for the boiler from the hot-well.

It will be seen that this gravity or barometric condenser dispenses with the air-pump altogether, but requires an injec-

tion-pump, which is not necessary in the jet condenser previously discussed. The lift, however, of such injection-

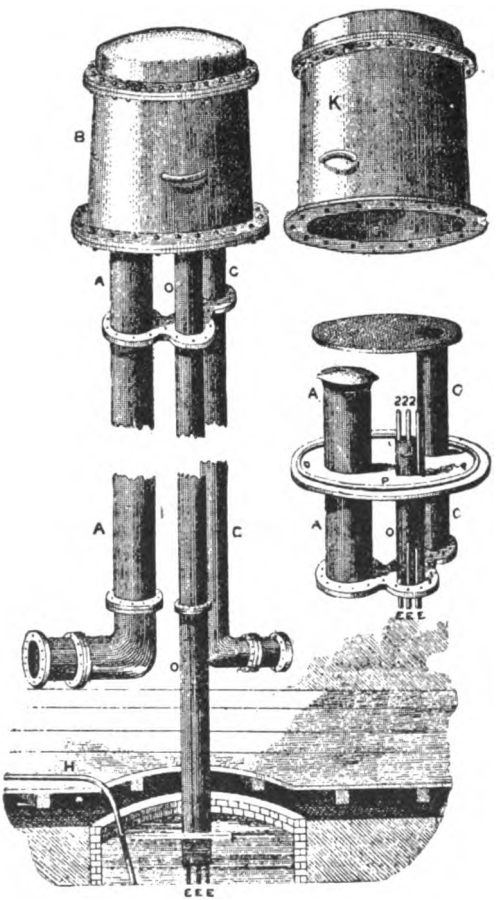

FIG. 76.

pump is comparatively small, and it requires little power to run it. The difficulty with the Ransom condenser was the trouble from the air. The pot had to be very tight, and the aspiration devices were not entirely satisfactory.

55. **The Siphon or Injector Condenser.**—Belonging to the class of gravity condensers, so far as barometric balance

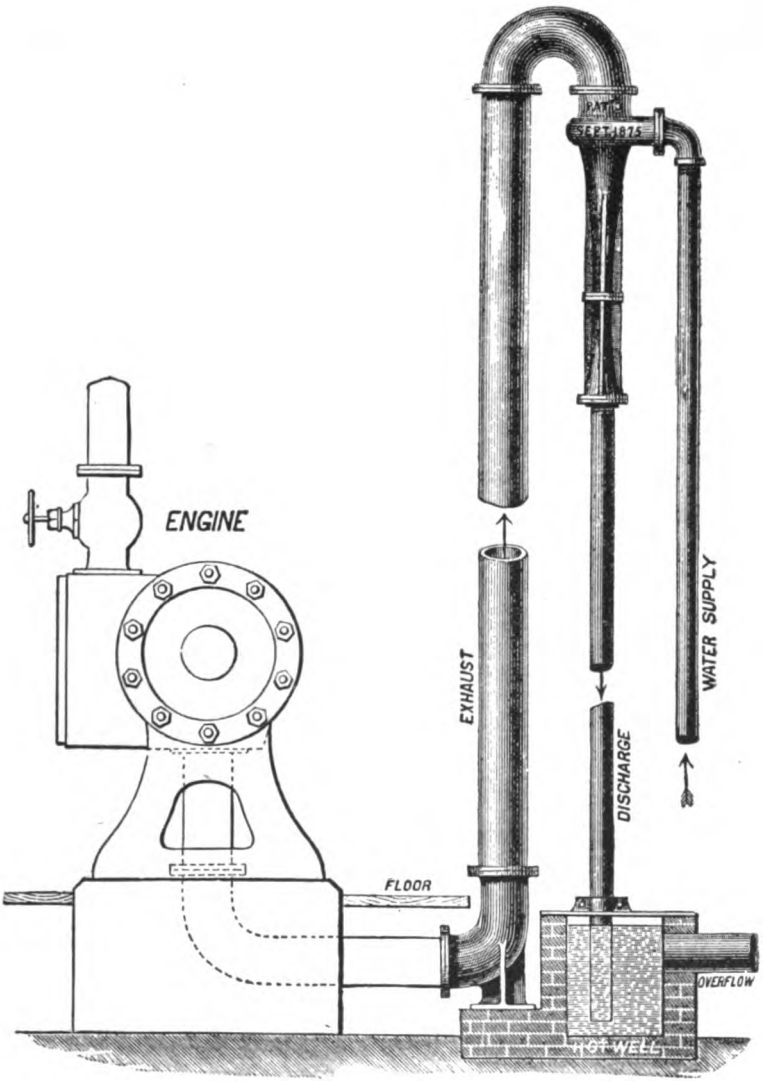
ENGINE
EXHAUST
DISCHARGE
WATER SUPPLY
FLOOR
OVERFLOW
HOT WELL

FIG. 77.

is concerned, but making much more complete use of the principle of induced currents for maintaining the vacuum, is the Bulkley condenser, shown in Fig. 77. The principle of sealing

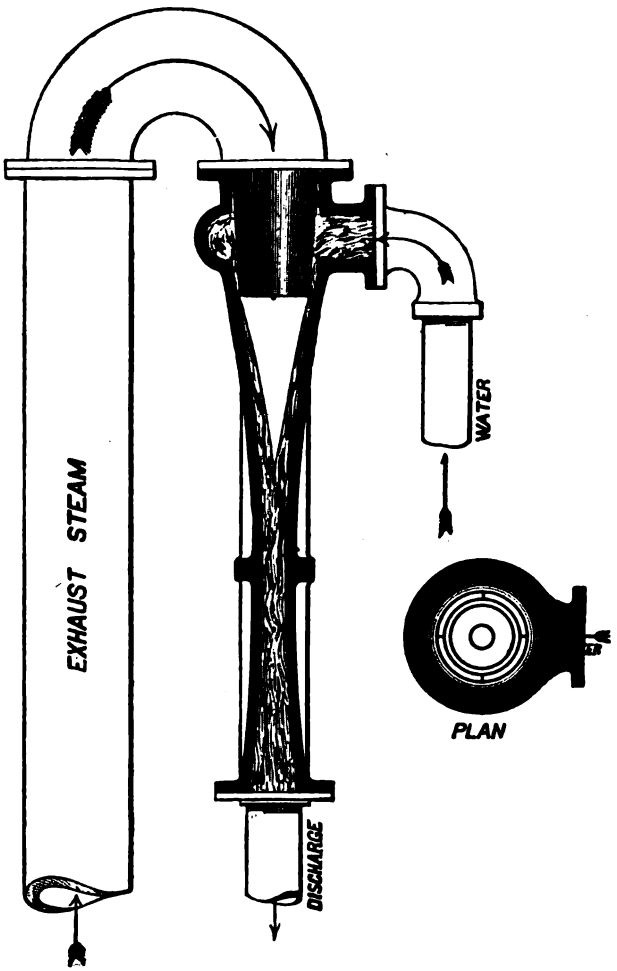

FIG. 78.

the discharge in the hot-well and locating the condenser at the height of 34 feet above the level of the water in such well are

retained, but there is no pot as in the Ransom design. From the section shown in Fig. 78 it will appear that the exhaust-steam receiving a downward direction in passing through the gooseneck at the top of the apparatus passes through the inner cone surrounded by an annular cone of water. The steam is condensed in this conical space, and falls with the injection, whose velocity is so graded by the cross-section of the condenser that air in the injection is entrained and has no opportunity to remain in the space where the vacuum is. The small vacuum-cone being continually created and emptied prevents the trouble from air, which was the difficulty of the first form. There is no air-pump, but the injection-pump is required as before.

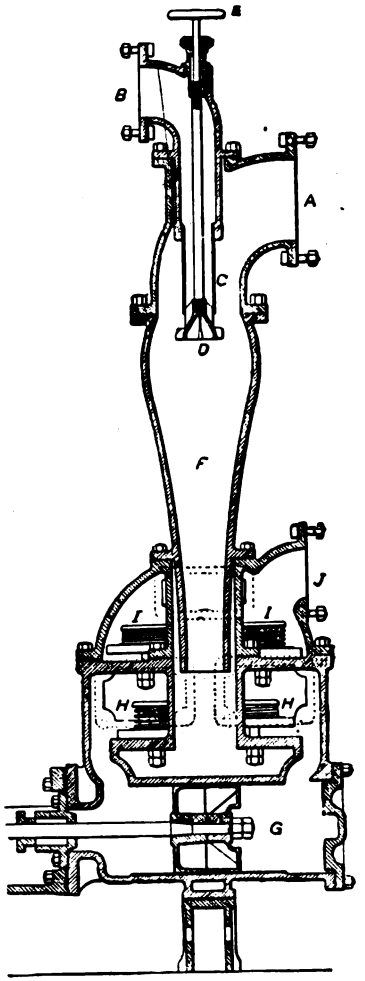

FIG. 79.

56. The Ejector Condenser with Pump. — There are many places where the height required for the long leg or siphon of the barometric condenser is inconvenient, notably at sea. This has given rise to a design of condenser (Fig. 79) in which the small bulk of the injector and its efficient action are combined with a pump to maintain the vacuum by continually drawing off the water and air. The exhaust-steam enters through the inlet *A*, and the injection through the inlet *B*. The latter is controlled by an inner pipe *C* which carries

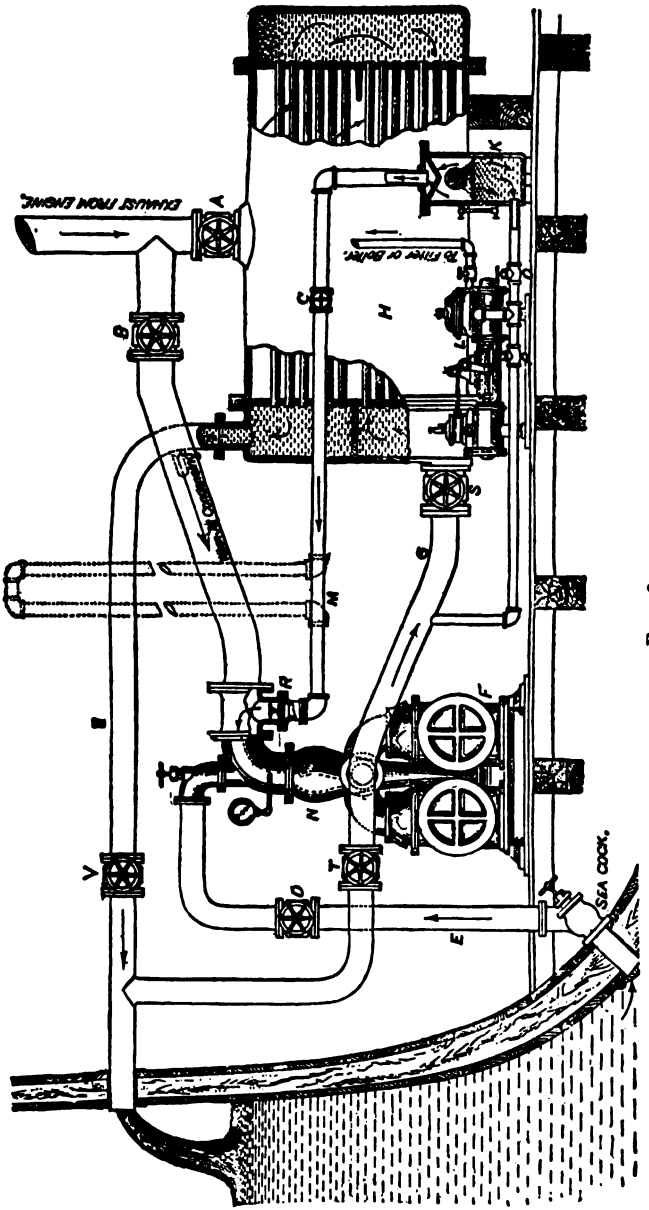

FIG. 80.

a deflecting arrangement *D*; this throws the injection in a finely divided state into the annular exhaust-steam passage, and the air-pump below continuously draws off the water mixed with air to which a higher velocity is given by reducing the cross-section, so that the bubbles of air once caught in the water have no chance of rising into the vacuum-space below *D*. Fig. 80 shows a condenser of this form applied to a boat-engine.

57. **The Exhaust-steam Ejector Condenser.**—It early suggested itself to apply the principle of induced currents as used in the steam-injector to draw up the injection-water and to make use of the living force of the water thus set in motion to oppose the balancing effect of the pressure of the air. The first design of this sort is identified with the name of Morton (Fig. 81) in England, and the more usual forms with the name of Schutte in Germany and America (Fig. 83). The philosophy of the Schutte injector condenser depends on such an enlargement of the discharging end of the condenser that when the condensed steam and injection leave the outlet they have such a velocity as just to overbalance the tendency of the water in the hot-well to flow through that outlet back into the space where the vacuum due to condensation is maintained. As will appear from the sectional cut (Fig. 82), the steam enters through the side into an annular chamber, and passes through a series of inclined orifices or nozzles. The steam moves with considerable velocity, and draws in water from a cold-well *A* (Fig. 84), and when the steam and water meet, the steam is condensed and flows with the rapidly moving water out through the discharge into the hot-well *B*. The discharge is sealed as shown in the general view, and the velocity of flow overbalances atmospheric pressure on the well. The small steam-connection enables water to be drawn into the condenser on the injector principle, in order to start it when water does not flow naturally to this level. The bypass

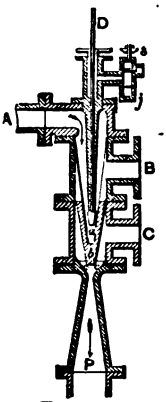

FIG. 81.

controlled by the valve permits the exhaust to be carried to the open air when for any reason it is desirable to run the engine non-condensing.

It will be observed that this arrangement also, like that in

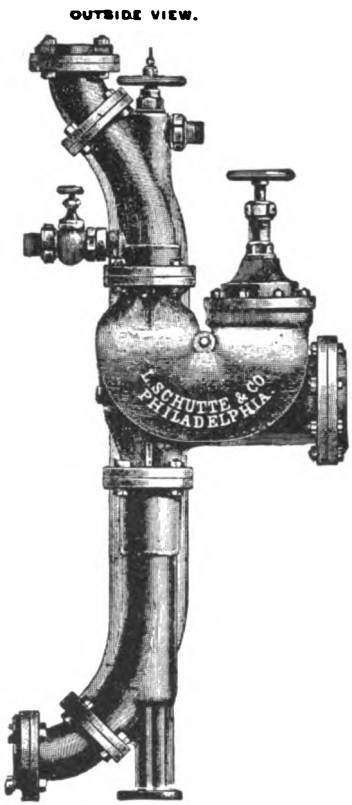

FIG. 83.

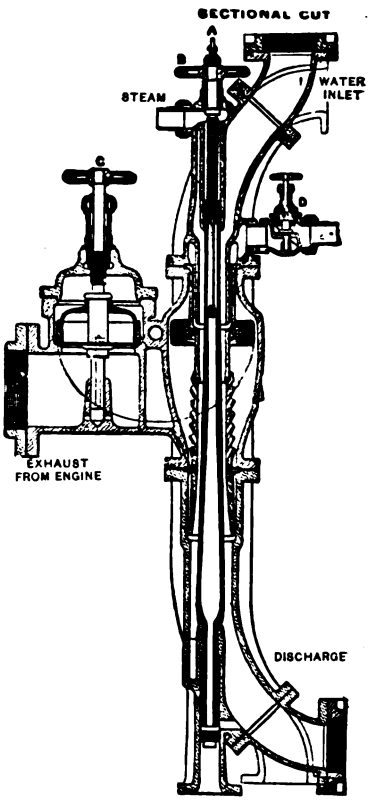

FIG. 82.

par. 56, enables the condenser to be operated without the 34 feet of elevation. The series of gravity siphon and ejector condensers are all jet or direct-contact condensers.

58. **Pump Condensers.**—For mining purposes and in cases where the disposing of exhaust-steam is a feature of the problem which must be considered, it has been quite usual to

turn the exhaust-steam from the driving cylinder into the suction-pipe upon which the water end was acting., This has been a very prevalent practice in England, and several devices

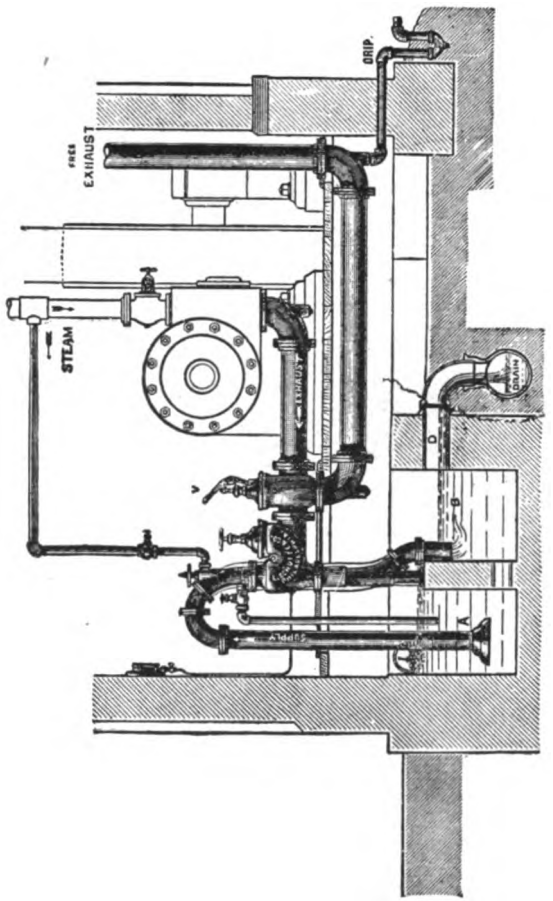

FIG. 84.

for the convenient application of the principle have been proposed. Fig. 85 shows such a condenser in which the proportion of the suction which is used as condensing water is controlled automatically by the float *F*. The water from the well enters through an opening *S*, and the opening *D* connects the condenser to the suction-orifice of the pump. The

exhaust-steam enters at E, with a provision for free discharge to the air if for any reason the pump is to be run non-condensing. This principle of course can be applied in a great variety of ways.

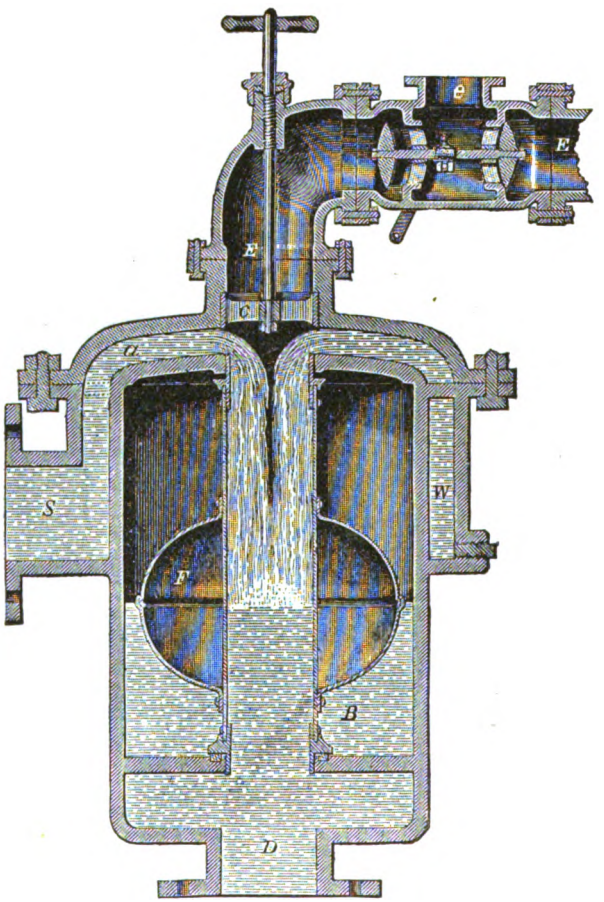

FIG. 85.

59. **The Hot-well.**—Where there is an excess of water resulting from mixing the injection with the condensed steam above that required by the boiler, the air-pump will discharge into a hot-well. In engines with surface condensers the hot-well becomes a much less significant organ, because only the

condensed steam is delivered by the air-pump while the injection or cooling water is passing upon another circuit.

Referring to Fig. 30 as a typical river-boat engine with attached air-pump, it will be observed that the top of the air-pump, which is the discharging end, is enlarged into a cylinder of nearly twice the diameter, fitted with a loose cover. This enlargement of the air-pump is the hot-well. In engines operating with independent air-pumps the hot-well will be any convenient tank or reservoir. It need not be tightly closed, as there is no pressure in it, and it simply has to take care of warm water and serve as a cistern from which the boiler feed-pumps may draw their suction. In land practice it is usually arranged with an overflow whereby the excess of water not needed by the boilers may escape to waste. In river-boat practice the excess is usually taken care of by pumps.

60. The Feed-pump.—It is usual in typical river-boat engines to attach to the rod of the air-pump one or more brackets or half cross-heads, whereby the rod from the beam shall operate the pump or pumps which take care of the water discharged into the hot-well. In Fig. 11 this smaller pump is operated from the small beam which drives the air-pump. In engines of this class these pumps must have capacity sufficient to empty the hot-well continuously. Where the hot-well can overflow as on land, such pump need have only a capacity sufficient to feed the boilers with the water which they require. In the former case, where the pumps are handling an excess of water, it is common to arrange the discharge from the pumps to branch into two outlets. One of these outlets goes to the boiler, and the other goes overboard through the hull. The valve in the overboard branch will control the proportion which goes through each branch, since if that valve be wide open the entire delivery of the pumps must go overboard, because the pressure in the boilers must be overcome before the water will flow through the branch connected to them. On the other hand, if the valve is shut in the overboard branch, the entire discharge of the pumps goes into the boilers. At intermediate degrees of closure, part will go overboard and part into the boilers.

CHAPTER V.

SIMPLE AND CONTINUOUS-EXPANSION ENGINES.

61. Introductory.—In the designs and types which have preceded, the steam has entered the working cylinder from the boiler, and after doing its work, has been exhausted either into the atmosphere or into a condenser. It has also been shown that it is of advantage to use the steam in such a way as to take advantage of the principle of expansive working (par. 44). It has further been seen that it is of advantage to secure a high pressure in the cylinder if a powerful engine is to be obtained without increasing its bulk or weight (par. 35).

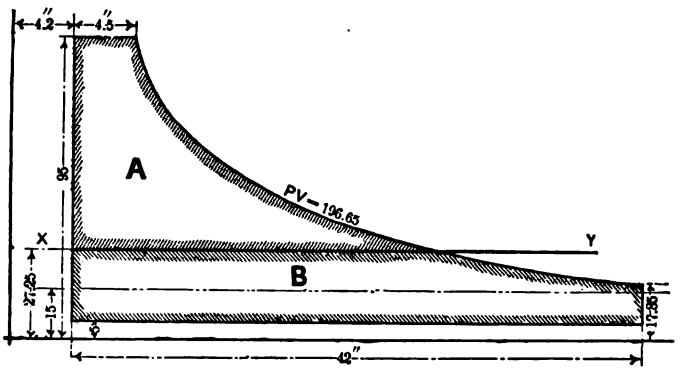

FIG. 90.

The lower limit of pressure upon the piston is imposed by the lowest temperature usual with condensing water (par. 45).

If thus, with a fixed lower limit, the diagram of Fig. 90

be constructed so as to have the initial volume of steam admitted into the cylinder bear a very small relation to the final volume when the stroke is completed (which is the condition necessary with high expansion and considerable difference between T_1 and T_2), it comes about that the diagram of pressure resembles that shown in that figure.

If in this the length of the upper or admission line representing the portion of the stroke during which admission of steam from the boiler is taking place be so short as is represented, it is apparent that the boiler-pressure does not act very long, nor does it act upon the crank at an angle advantageous to produce rotation. Furthermore, the cylinder-diameter with such high grade of expansion has to become large in order to have this diminished mean pressure do the work required. The type of engine which is known as the compound or multiple-expansion engine is one in which the expansion of the steam is continuous in more than one cylinder whose volumes shall be so adjusted to each other that the pressure of the steam shall be greatest in the smallest of the series. When the expansion is continuous in two cylinders it is called a compound engine. When it is continuous in three stages, and whether done in three cylinders or four, it is called a triple-expansion engine. When the expansion is continuous in four stages, whether done in four cylinders, five cylinders, or six, it is called a quadruple-, or by the general term a multiple-expansion engine. When there are two cylinders, the one which receives steam from the boiler is called the high-pressure cylinder, and the larger one receiving the steam from the high-pressure cylinder and expanding to the lower-pressure and exhausting it is called the low-pressure cylinder. Abbreviations for these names are H. P. and L. P. When there are three stages in the expansion, the middle cylinder of the three is called the intermediate cylinder (I. P. or M. P.). When there are four stages, the one receiving steam from the high-pressure cylinder is called the high-pressure intermediate, and that which receives steam from the high-pressure intermediate, expanding it and exhausting into

the low-pressure cylinder, is called the low-pressure intermediate. Expansion has not been carried on any practical scale farther than four stages.

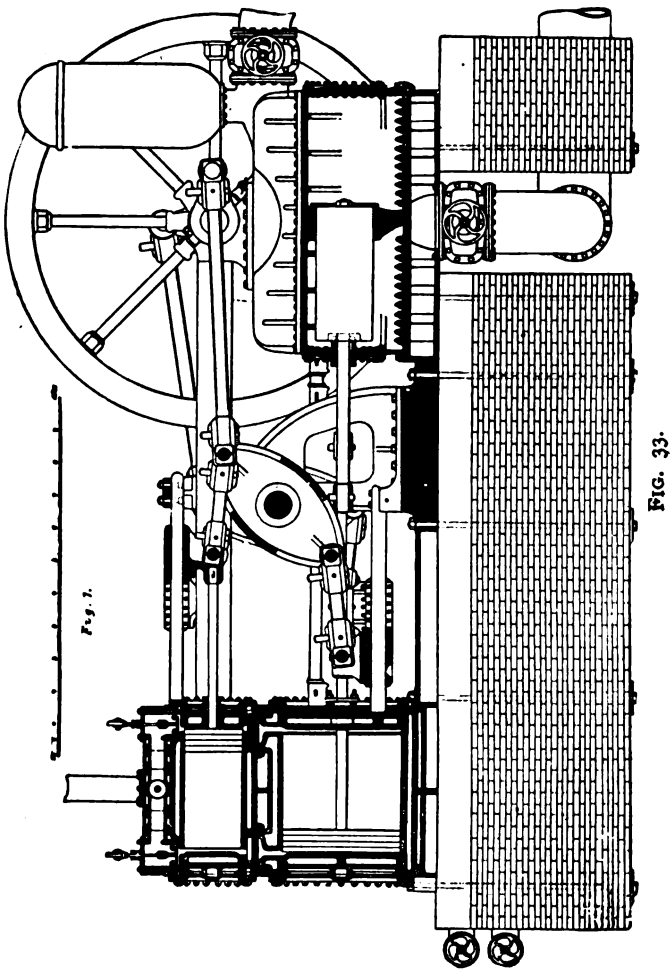

FIG. 33.

62. Action of Steam in Compound Engines.—By a reference to Fig. 33 or Fig. 34, which present compound pumping-engines, it will be seen that two cylinders of differing diameter are connected to the common beam. The steam may be

imagined to enter the smaller cylinder from the boiler, and to exert its pressure continuously throughout the said stroke, giving such a diagram as is given in Fig. 66. At the completion of the stroke, instead of exhausting to the atmosphere or condenser, the exhaust of this smaller cylinder is into the bore of the large. The diameter of this larger cylinder is twice that of the smaller or nearly so, so that its volume is four times that of the smaller. The steam then at the completion of the stroke of the larger cylinder will have a volume four times that which it had when it left the small cylinder, and a pressure approximately one fourth that with which it entered the smaller cylinder. In other words, both cylinders have operated without cut-off of admission, and yet the steam has been expanded four times by reason of the difference in volume. If the first or high-pressure cylinder was operated with a cut-off of one half or one quarter of its stroke, the expansion into the larger volume would have made an increase of eight or sixteen times the volume and a terminal pressure practically one eighth or one sixteenth, respectively, of the initial pressure.

It will be seen that the pressure which drives the large cylinder is a back pressure upon the smaller one, but by the difference of area receiving this pressure the effect upon the larger cylinder is a positive or working effect. If the cylinders were of the same diameter, they would simply act as one hollow piston. The space between the two pistons would be like a hollow space between the faces into which the steam escaped after a working stroke before it was exhausted.

It is to be noted that the diameter of the largest or low-pressure cylinder in the series is the one which determines the horse-power or capacity of the engine. The high-pressure or small cylinder is inserted between the low-pressure cylinder and the boiler as the additional cylinder. This is manifest from the fact that it is the low-pressure cylinder which is full of steam when the exhaust takes place, and is therefore the area upon which the average or mean pressure is to be computed. In the triple- or quadruple-expansion engine the

action of the steam is identical with that in the compound, using three or four cylinders or stages instead of two.

63. Mechanism of the Compound Engine.—The plan of

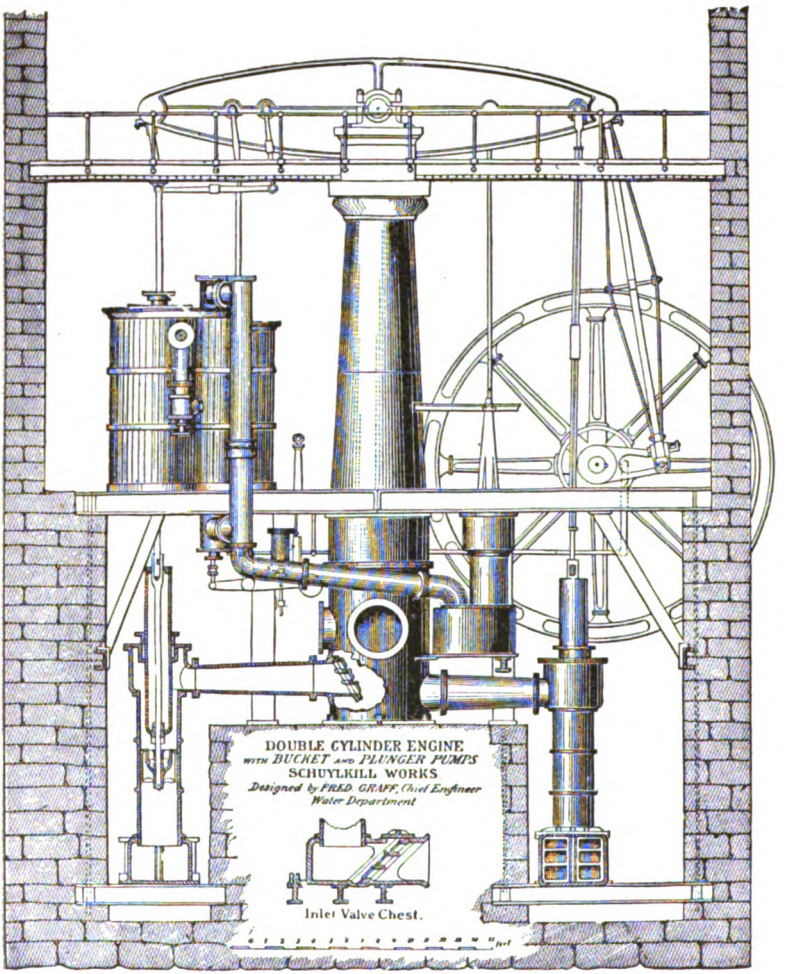

FIG. 91.

the compound engine with continuous expansion in more than one cylinder was first proposed by Hornblower (1781), and was patented by Woolf in 1804. The feature of action in these

early or Woolf engines was that the pistons were moving either in the same direction or in opposite directions in the same phase of the crank motion. The Hornblower engines had two cylinders side by side, operating on the same side of the centre of the beam, as appears in Fig. 91. The Woolf engines were mostly horizontal engines with the two pistons on the same continuous piston-rod. If the two pistons were attached on opposite sides of the beam as in Fig. 33, they would always be moving in opposite directions, but in the same

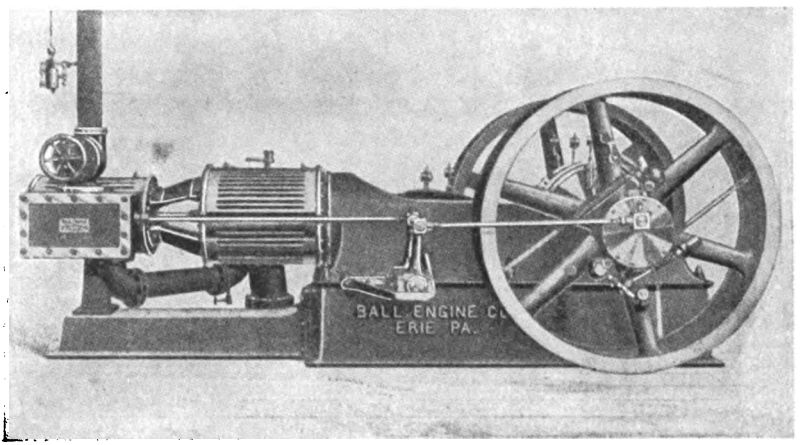

FIG. 92.

phase and reach the end of their stroke at the same time (see also Fig. 34).

When the two pistons are on the same piston-rod the engine is called a tandem engine, whether arranged horizontally or vertically. It is perhaps a little more usual in horizontal engines to put the low-pressure cylinder nearer to the crank, because its greater weight comes nearer the centre of gravity and the massive part of the bed-plate, Fig. 92. As the work is supposed to be equal, there is no reason for adhering to this arrangement if it is more convenient to reverse it (Fig. 93). The vertical tandem compound is sometimes called the steeple engine (Fig. 94), and in this type the low-pressure cylinder is

always below, and the lighter high-pressure above. In the tandem compound, however, in either form the entire work of the two cylinders is exerted through the common piston-rod upon one crank-pin.

The great development of the compound engine for marine practice involves the advantages of applying the work of the two cylinders to separate cranks. These two cranks will compel the two cylinders to be located side by side, and when arranged in the plane of the propeller-shaft, as is usual in marine practice, they are called fore-and-aft engines. The

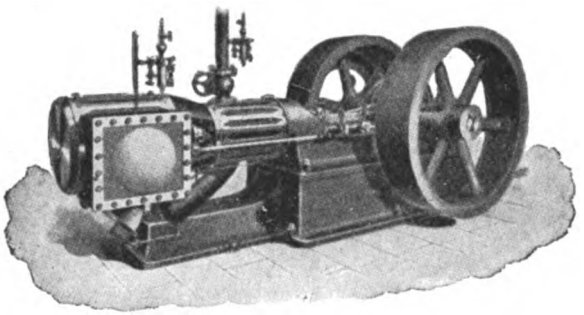

FIG. 93.

cranks of such engines with two cylinders are likely to stand in one of three relative positions to each other. The first and most natural is to have the cranks opposite or 180° apart. By this arrangement the two cranks are on opposite sides of the shaft, and therefore the weights of the reciprocating parts are balanced. This does away with one of the objections to the single-cylinder vertical engine (par. 17). Similarly the effort of the two cylinders is balanced upon the shaft so that less of it comes upon the bearings, particularly those components of the effort of a single cylinder which the bearings must endure when the connecting-rod is working at angles unfavorable to rotative effect. This arrangement is especially favorable for vessels intended for shallow water, as it diminishes the tremor caused in a flexible hull by an alternating effort in unbalanced arrangements. This plan also makes the connection between the cylinders exceedingly simple and direct.

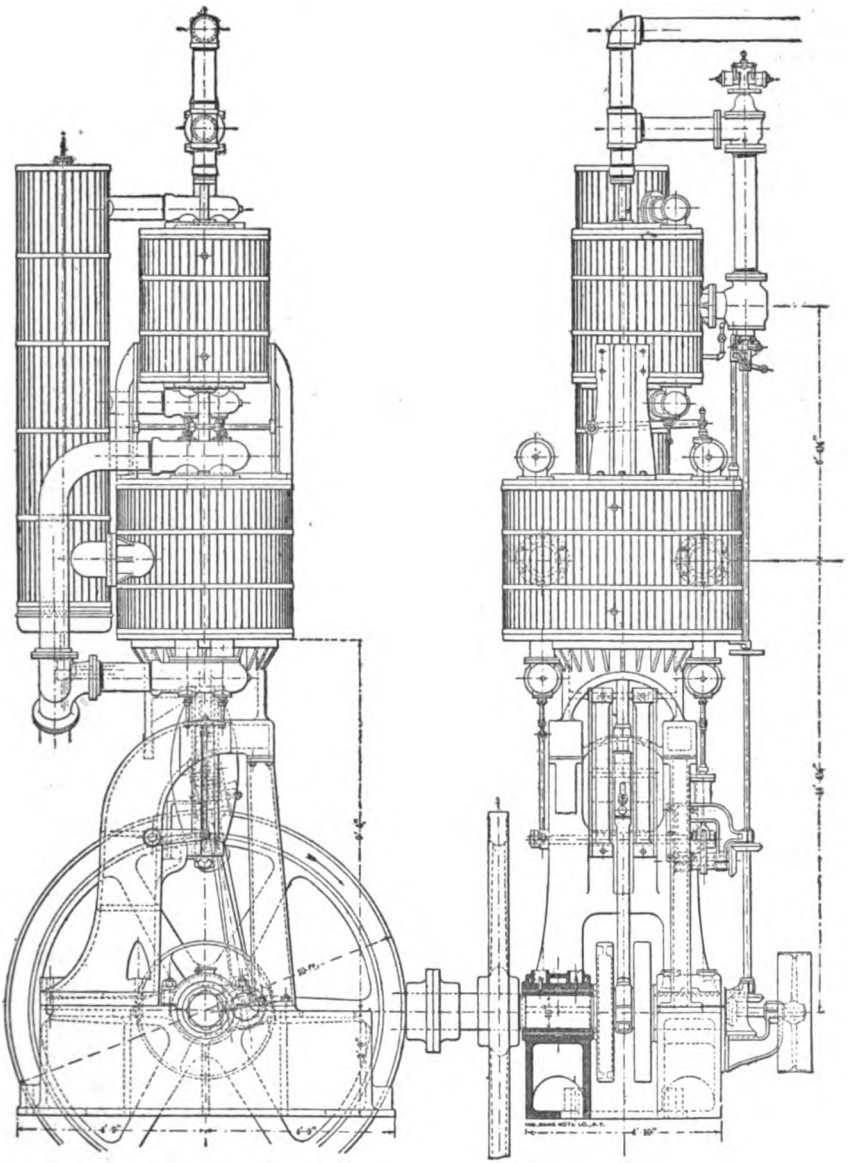

FIG. 94.

The low-pressure piston is always moving in the direction opposite to that of the high, and consequently the exhaust from the completed stroke of the high-pressure piston crosses straight over to the same end of the low-pressure to drive it in the direction opposite to that of the high pressure. This is an advantage of the beam arrangements illustrated in Figs. 33 and 34, which have very short connections, as will be seen. A fourth advantage of this arrangement for sea-going vessels is that the weight of the reciprocating parts serves as a species of fly-wheel to take care in part of excessive energy when the screw comes to the surface of the water in heavy seas and suddenly relieves the shaft of its proper resistance.

A second arrangement of fore-and-aft engines with two cranks is to have them parallel. This is very little used in comparison with the previous arrangement, although offering the advantages of distributing work on more than one crank-pin. It does not have the advantages of balance offered by the preceding plan, nor the advantage of equalizing effort offered by the third plan.

The third arrangement is to place the cranks quartering or 90° apart. This plan balances weight in certain parts of the revolution only, but equalizes the turning effort upon the shaft. One crank is at its best position when the other is passing the dead-centre with no rotating leverage, and for this reason this is one of the most preferred arrangements for stationary use. A difficulty is introduced, however, because the high-pressure cylinder is at half-stroke with half the cylinder full of steam to dispose of, when the low-pressure piston is at its dead-centre with no volume but the clearance to receive it. This compels the introduction between the two cylinders of a receiver which has a volume of sufficient size to receive the exhaust from the high-pressure cylinder, and to deliver it to the low without too great pulsation or wide variation in the pressure prevailing in it. Adequate receiver-volumes are easily secured for engines whose cylinders are sufficiently separated in the pipe or passage which connects them. In designs for stationary power purposes in which the

fly-wheel or belt-wheel is placed so as to revolve in the plane between the two cylinders so that the steam from the high-pressure cylinder has to cross the space left for such fly-wheel, the engine has been called a cross-compound (Fig. 95), which will serve as typical of this very popular arrangement. It will be seen that the equalization of turning effort from the quartering cranks will diminish probable weight of fly-wheel required to maintain constant motion.

64. Beam Compounds.—There are comparatively few usual arrangements of compound engines operating the beam. Two cylinders may take hold upon opposite ends and be parallel to each other (Fig. 33) or inclined to each other (Fig. 32). They may take hold upon the same side of the beam (Fig. 91). This last arrangement is historically an early one and is identified with the name of McNaught, an engineer who increased the economy of many early extravagant engines designed for low pressure by adding the small or high-pressure cylinder at the side of the original larger cylinder of such beam-engine, and increasing the boiler-pressure carried. In engineering literature of the last generation this alteration was called McNaughting an engine. In certain forms of pumping-engines the steam-cylinders have been put above the beam, as in the design of Mr. E. D. Leavitt, for the handling of the sewage of part of the city of Boston, somewhat as shown also in Fig. 34. The advantage of applying the effort on the opposite sides of the beam is to diminish the effort upon the beam-centres, and derives the same advantages as in the first arrangement of the fore-and-aft engines. When the beam is triangular, as in some types of pumping-engines, the effect on the mechanism of the steam part is not affected (Fig. 36), nor if cylinders inclined to each other operate on a common pin (Figs. 22 and 96).

65. The Diagram of Steam Effort in a Compound Engine.—It will be apparent that a diagram which shows the pressures on the piston of a high-pressure cylinder of a compound engine will occupy a position considerably and mainly above the line representing atmospheric pressure, inasmuch as

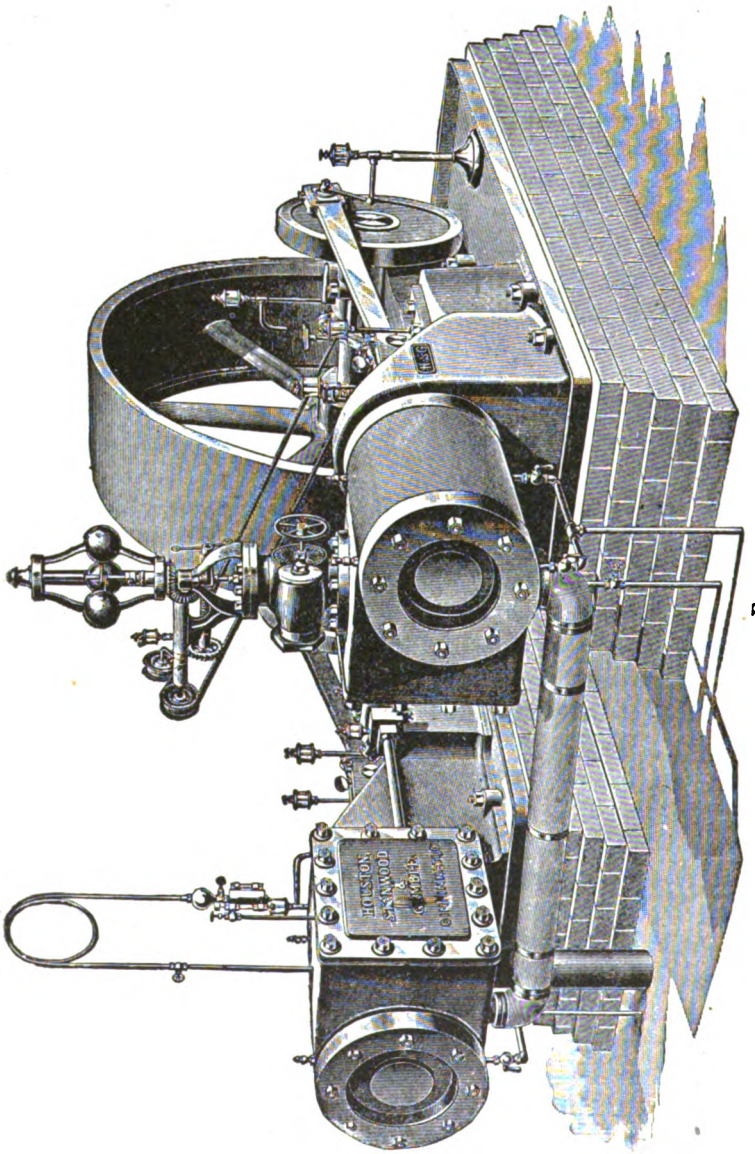

FIG. 95.

Digitized by Google

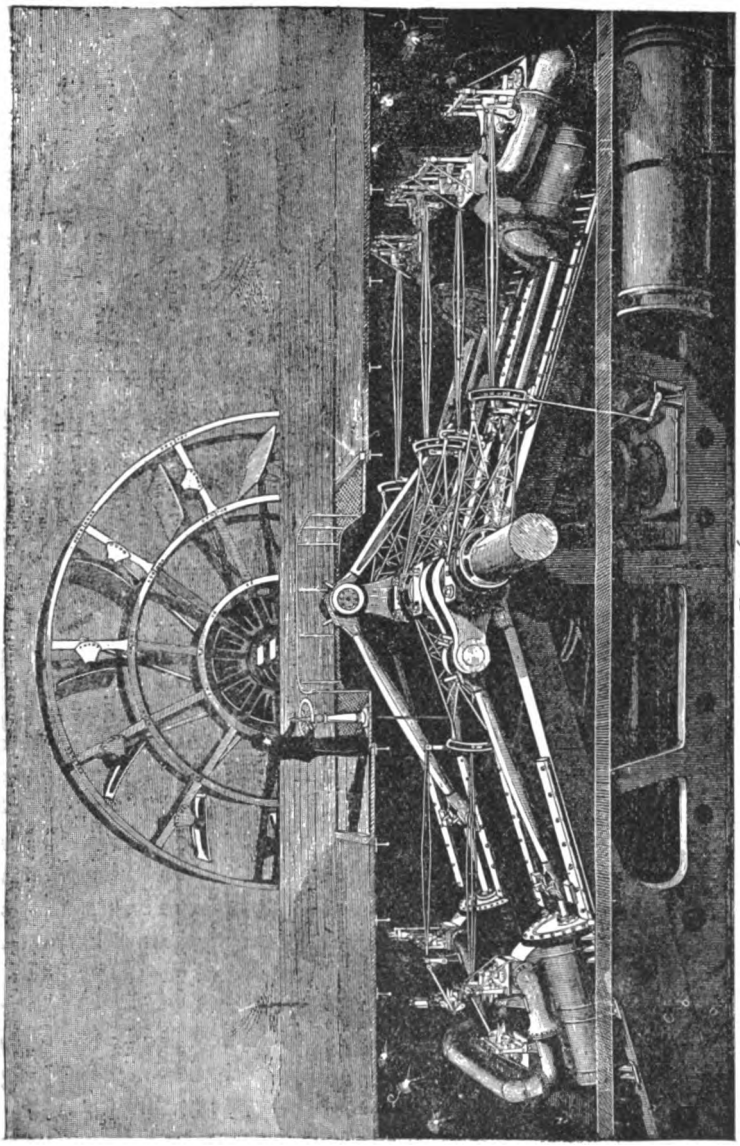

FIG. 96.

the exhaust line of the return stroke will be the driving-pressure for the other or low-pressure cylinder. Furthermore, the diagram of pressures upon the low-pressure cylinder should have its upper line the complement of the lower line of the high-pressure diagram, because the larger piston is being driven by the steam which escapes from the smaller cylinder. Any discrepancy or lack of harmony between these lines in a Woolf engine without receiver indicates losses from friction, condensation, or unnecessary expansion in the clearances or passages between the two cylinders. In the receiver engine the steam in that receiver is to be treated as a steam spring receiving and storing work from the high-pressure cylinder

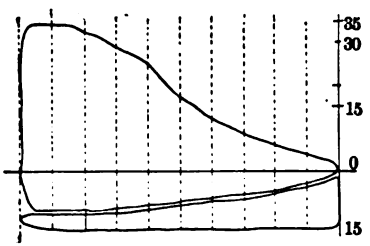

FIG. 97.

and giving it out unaltered to the succeeding stroke of the low-pressure cylinder. Any discrepancy between the lines of the two diagrams for the two cylinders indicates a drop caused by free expansion from the high-pressure cylinder into the receiver without doing work in driving the low-pressure cylinder, as well as the losses from friction and condensation present in the other type. Such loss by free expansion is not usually recovered, and should be guarded against if the conditions of operating the engine permit it.

It is supposed in Figs. 97 and 98 that two such diagrams are drawn with the same vertical scale representing pressures per square inch, and the same horizontal scale representing the stroke of the engine. It becomes apparent, however, at once that, so far as the effort upon the crank-pin is concerned, the difference in the diameter of the two cylinders introduces an inequality of work which must be compensated. If the rela-

tive volume of the two cylinders be as four to one, then the area of the high-pressure diagram should be reduced in the ratio of four to one. This reduction can be made either by reducing the height ordinates or the length units in the proportion of four to one. As it is convenient to keep the vertical scale of pressures constant in order to enable the law of change of pressure with change of volume to be observed in the continuous expansion, it is preferred to reduce the diagram Fig. 97 by shortening the length of the upper diagram at each selected distance above the atmospheric line in the proportion of one to four and thus get a new diagram by points.

Thus in Fig. 98 the length *cd* is one fourth the length

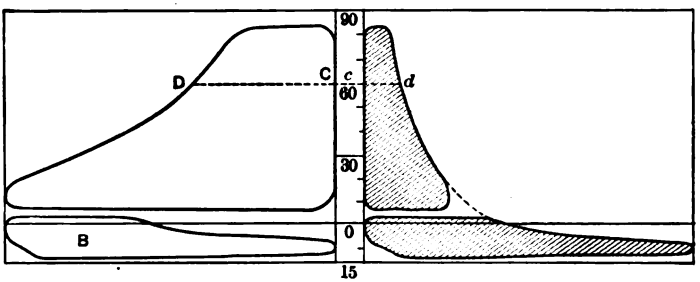

FIG. 98.

CD in the original diagram. It will thus appear that the reduced diagram will now represent on the same scale as the low-pressure diagram of Fig. 97 the work delivered upon its crank-pin, and we therefore have the net indicated work done in the two cylinders presented by the combined diagram shown in Fig. 98 at the right hand. This indicates to the eye the continuance of the expansion in a compound engine, and shows the space for loss between the two cylinders which would not be present if the expansion were in one cylinder only. It is this area which designers of continuous-expansion engines are to reduce, and it is in spite of this loss that the compound engine is superior to the single. Care must be taken in combining the diagrams of effort of steam in the two cylinders to put them in their right relation to each other vertically. This is accomplished by means of properly relating

them to a vertical line drawn outside of the actual diagram at a distance beyond it which shall represent a volume equal to

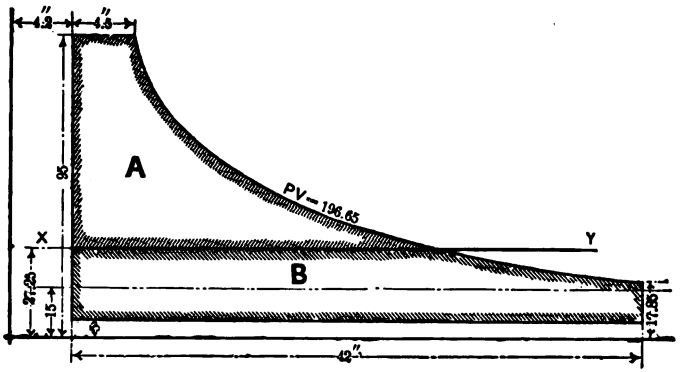

FIG. 90.

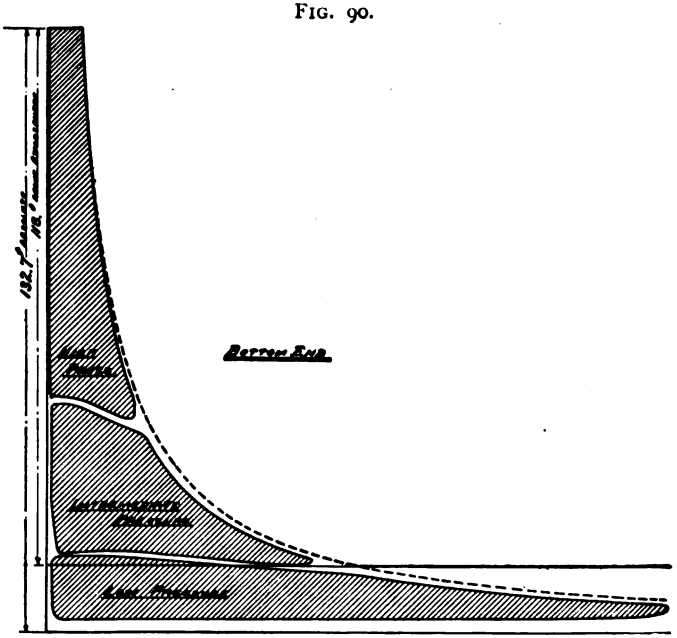

FIG. 99.

that of the clearances in each cylinder. The diagrams should be placed one over the other, so that these lines representing a zero clearance volume shall coincide. (Fig. 90.)

In a triple- or multiple-expansion engine where the expansion is in three or more stages, the reduction of the diagram of effort is identical in principle. The area of the intermediate and high-pressure cylinder diagrams are reduced lengthwise by the proportion which each bears to the volume of the low-pressure cylinder, and the three or more diagrams are superposed with reference to their lines of clearance-volume. Fig. 99 shows such a combined triple-engine diagram.

66. Arrangement of Cylinders in Multiple-expansion Engines.—The triple-expansion engine is most frequently arranged with its cylinders fore and aft in vertical engines or side by side in horizontal engines, with the three cranks 120° apart when but three cylinders are used (Fig. 17). So far as the convenient passage of the steam is concerned, it is usual to put the intermediate between the other two. This is the most prevalent arrangement in marine practice, and in the vertical triple-expansion engines usual in electric-light and power stations. The convenience of balancing weights symmetrically in marine practice has brought about occasional divergencies from this natural arrangement in order to bring the heavy and bulky low-pressure cylinder nearer to the middle of the engine. The same condition of bulk and weight for the large cylinder has brought about the plan of adding to the number of cylinders, without increasing the number of stages of expansion. Furthermore, the constructive difficulties of lengthening the engine and its crank-shaft to accommodate four cranks, and the great advantage offered by the 120° arrangement of the triple engine, have induced the designers of quadruple engines to get their four stages with not more than three sets of cranks. Figs. 105 and 106 show type arrangements in elevation and direction of the steam-currents for triple and quadruple engines respectively.

67. Reheaters for Compound Engines.—The study of the combined diagram of compound engines early indicated that there would be advantage in diminishing the area which represents lost work if the steam could be reheated or regenerated in its way from the high-pressure to the low-pressure

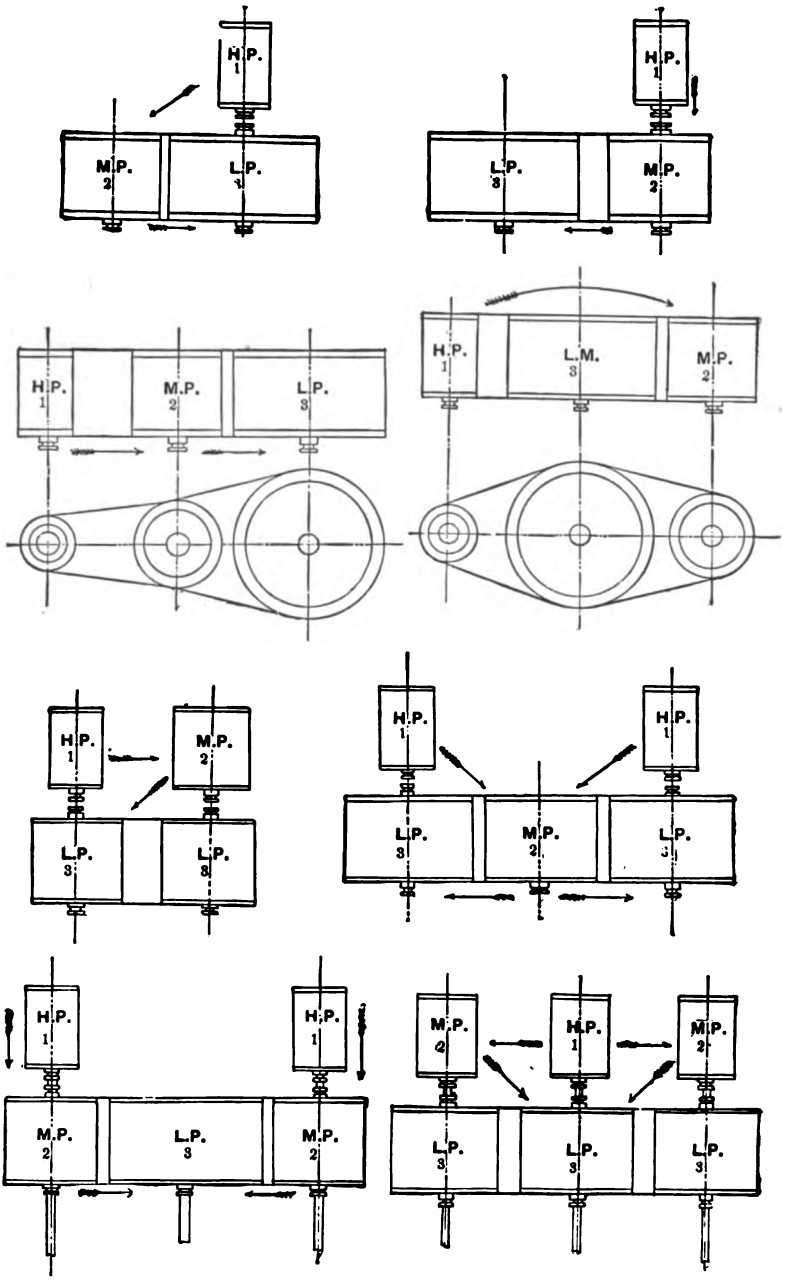

FIG. 105.—GROUPING OF CYLINDERS OF TRIPLE-EXPANSION ENGINES.

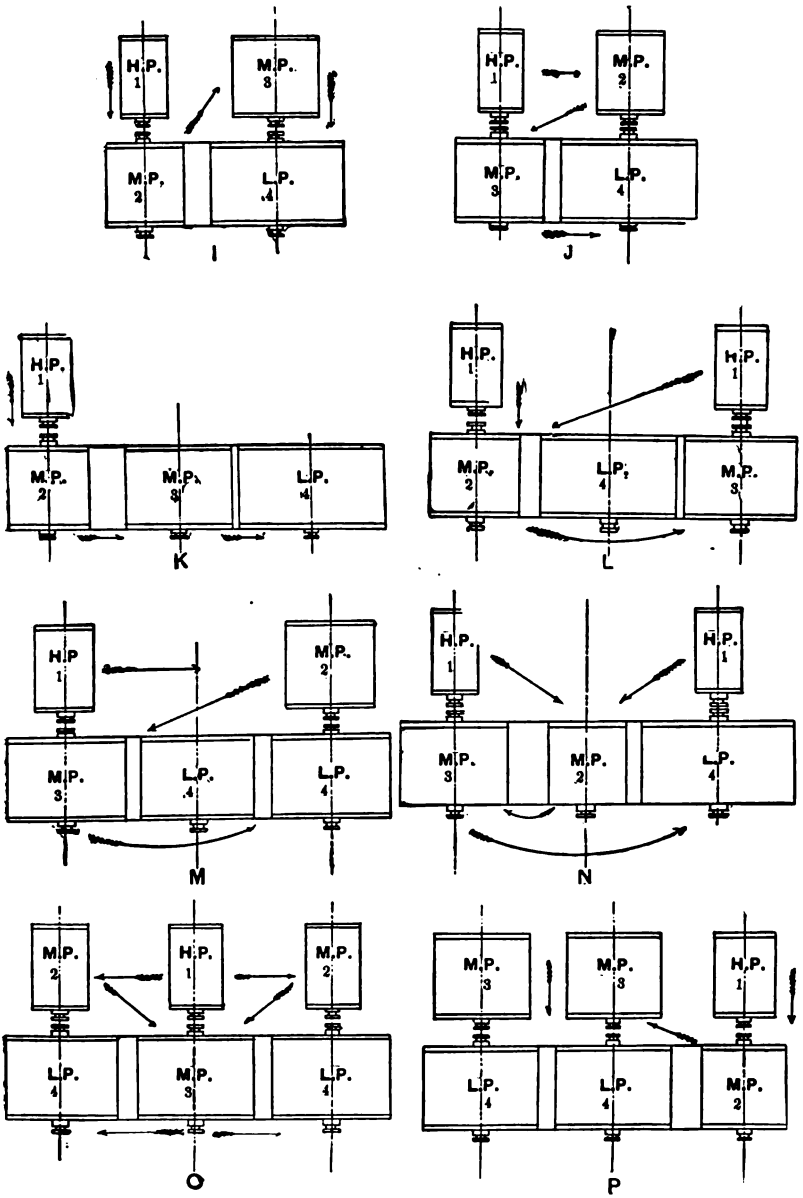

FIG. 106.—GROUPING OF CYLINDERS IN QUADRUPLE-EXPANSION ENGINES.

cylinder. Reheating would supply additional heat to compensate for that consumed without return in the high-pressure cylinder, and would vaporize the water of condensation from doing work before the steam entered the second cylinder. It is more economical to vaporize such condensed steam by heat supplied before expansion begins than to have the vaporization follow the reduction of pressure during expansion in the cylinder. In this latter case the heat required for vaporization is withdrawn from the metal of the cylinder, or from the working steam, and the latter needs its heat to work with.

It has, therefore, been a feature of the design of many recent successful compound engines to introduce a coil of pipe carrying hot steam from the boiler into the receiver between the cylinders. The working steam in the receiver passing around outside of this coil has its temperature and pressure raised, and is dried before passing to its work in the succeeding cylinder. Fig. 107 illustrates a form of such receiver with its heating tubes, and in Fig. 108 is shown the disposition of such a reheater in its relation to the two cylinders. It is an advantage of the cross-compound arrangement that it is particularly favorable both in principle and construction to benefit from the introduction of the reheater. Fig. 34 also shows a disposition of the reheater in the receiver.

68. Compounding above the Atmosphere.—In the discussion which has preceded it has been assumed that the larger or low-pressure cylinder of a compound engine was a condensing cylinder, and that the steam after working in it escaped into a vacuum chamber. This is not essential, but the larger cylinder can exhaust into the air when it is not convenient or desired to provide condensing appliances. Fig. 109 shows the Westinghouse compound engine constructed to meet this condition, and all the forms of compound locomotive are representatives of this class. They offer all the advantages of the principle of continuous expansion, and avoid whatever is introduced of complication by the requirement to condense the steam. They can be arranged according to any system, and the only disadvantage is that intro-

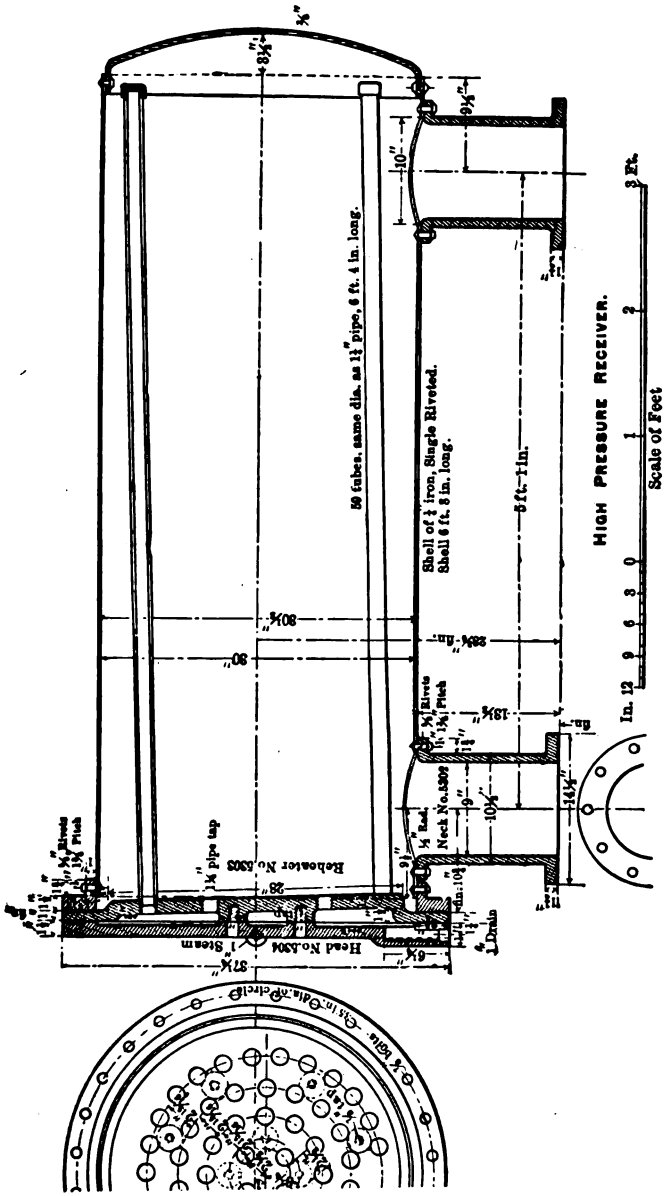
HIGH PRESSURE RECEIVER.
Scale of Feet
In. 12 9 6 3 0 1 2 3 Ft.
59 tubes, same dia. as 1¼" pipe, 6 ft. 4 in. long.
Shell of ¼ iron, Single Riveted.
Shell 6 ft. 8 in. long.
5 ft. 1 in.
Neck No. 5302
Reheater No. 5303
Head No. 5304
Steam
Drain

FIG. 107.

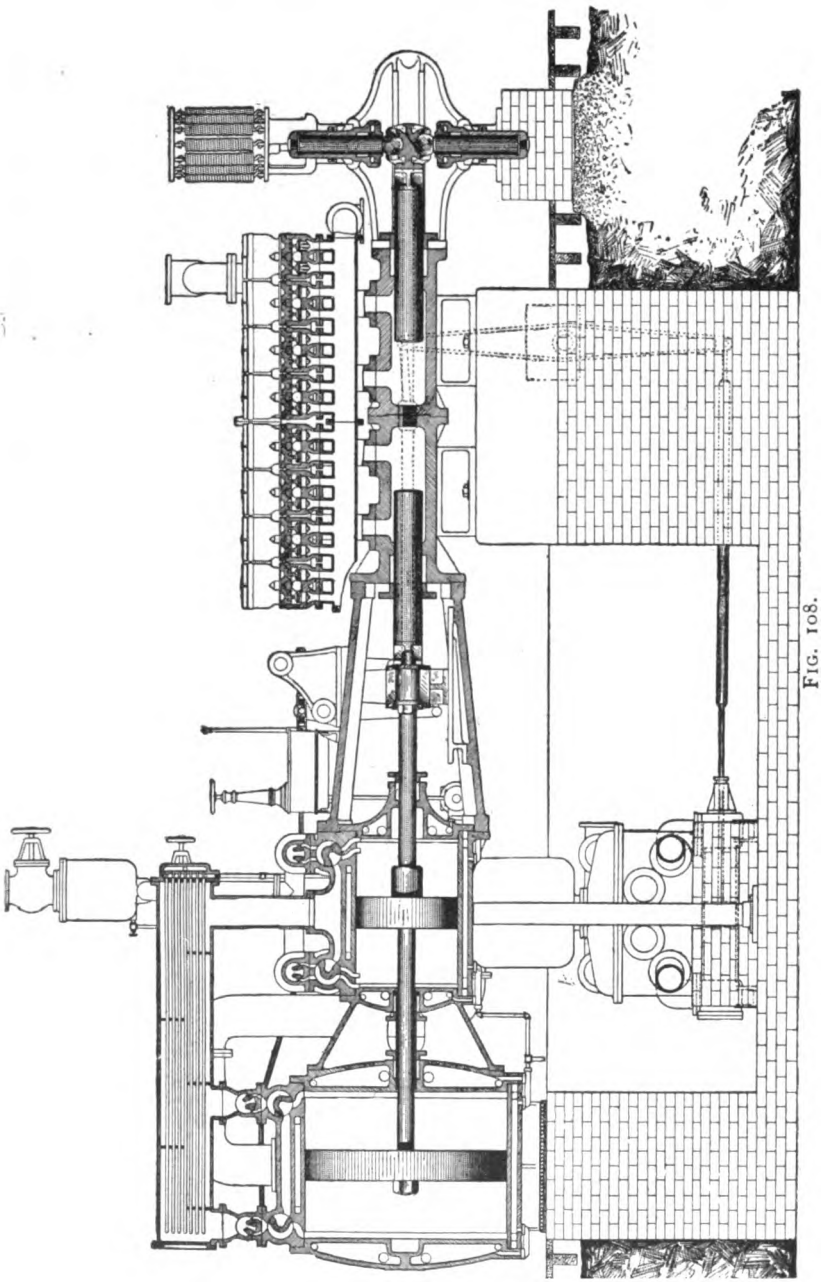

FIG. 108.

duced by the larger diameter of the cylinder when exhausting.

A back pressure of the given intensity acting upon the larger area causes a negative work upon the expelling stroke greater than when the exhaust is from the smaller cylinder. Compounding above the atmosphere is also used with conspicuous effect for medium-sized pumps without fly-wheels, where

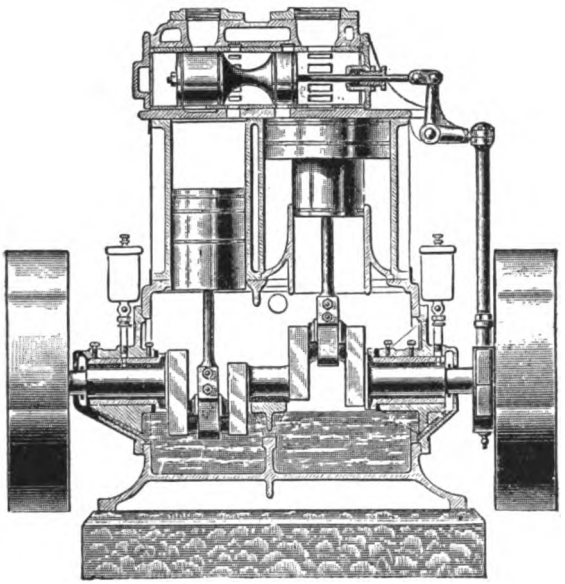

FIG. 109.

the steam must follow without reduction of pressure throughout the entire stroke of the piston. The desired reduction in terminal pressure is secured without causing too great variation in the driving effort of the steam.

69. Compound Locomotives.—The arrangement of cylinders in the compound locomotive working above atmospheric pressure is usually met in one of three ways. First, the two-cylinder compounds, which are cross-compound engines with the reheater in the smoke-box, using waste gases as the heating medium. The cranks are quartering as usual in the

locomotive, and the high-pressure cylinder is on the left side and the low-pressure on the right outside the frames in the position usual in the American locomotive. In order that such an engine may have sufficient starting power, it is usual to arrange that when the receiver is empty the opening of the throttle-valve admits steam from the boiler to the low-pressure cylinder as well as to the high. This is a necessity, furthermore, with quartering cranks to meet the case of the high-pressure cylinder having its piston at its dead-centre. As the receiver fills from the exhaust of the high-pressure cylinder, the pressure prevailing in it acts upon a piston which controls a valve which has been called the intercepting-valve, and when that receiver pressure is sufficient, boiler-steam is automatically shut off from the low-pressure cylinder, and from that time on the engine works as a compound.

The second arrangement has three cylinders. This is a more prevalent European design, and is not used in America. Usually the two cylinders which form the low-pressure stage are outside the frames in the position of the usual outside-connected engine, and the high-pressure cylinder is between the frames under the smoke-box. This central cylinder drives the forward driving-wheels by means of a cranked axle, and the outside cylinders drive the rear or trailing wheels by outside crank-pins. This arrangement is also sometimes reversed.

The third arrangement is the four-cylinder compound in which the high- and low-pressure cylinders are attached in pairs on each side of the engine, in the common cylinder location, to a common cross-head, from which the usual driving-rod passes to the crank-pins and wheels.

The advantage of this is that the engine works compound exactly as the single engine, and no material modifications of valve-gear are required. The high-pressure cylinder is above the low, and the two pistons move in the same direction on each side. Hence the steam exhausting from one end of the high-pressure cylinder has to cross diagonally to the other end of the low-pressure. This type requires no receiver and permits no reheater. The advantages of the compound

locomotive beyond those which it enjoys in common with any compound engine are the result of the lower terminal pressure at which the exhaust escapes. This is favorable to economy in the fire-box, because the fire is less torn by the pulsation of the exhaust, which causes the draught, and in cities the diminished noise of the escaping exhaust makes the locomotive less of a nuisance.

70. Advantages of the Compound Engine.—The principle of securing expansion by the continuous working of steam in cylinders of increasing volume is to be defended by reason of the following advantages:

1. The high grade of expansion and the difference between the initial and final temperature in the steam used is secured with an admission of steam into the cylinder through a longer proportion of the stroke than in the single cylinder. It has been seen (par. 44) that the efficiency of the fluid used increases with the difference in the initial and final temperatures. The work of the steam reaches the crank in angles more favorable to produce rotation.

2. With the terminal temperature at exhaust fixed by the temperature possible with the means used to condense the steam, the compound principle enables higher pressures to be used in the boilers as initial pressures in the cylinder. To increase the pressures in the boilers is to carry more stored energy in a given space; to use higher pressures is to enable each cubic foot or pound of steam to carry more energy into the engine-cylinder, and a given quantity of heat raises the pressure of steam more rapidly after the steam has become a complete gas than it does at lower pressures, when a large part of the heat is absorbed in changing the molecular condition of the water.

3. By receiving the high-pressure steam from the boiler first upon a cylinder of small area, as in the compound engine, the strain upon the mechanism at the joints and moving members is less than if that same pressure had to be received at the beginning of a stroke in a cylinder, and against a piston

of a large diameter. Less loss from friction also follows during the less effective angles of the stroke.

4. From the longer period of admission discussed in number one above, it follows that a more advantageous arrangement for admitting and cutting off the steam becomes possible. With the single cylinder and early cut-off in it, the openings to admit steam would have to be closed so early that it would be difficult to admit steam through wide and generous ports or passages. Such single-cylinder valve-gear with narrow areas for steam would introduce the difficulty known as wire-drawing of the steam. This is a phenomenon present when the pressure of steam is reduced by compelling it to pass through a narrow or constricted opening.

5. With high-pressure steam it is difficult, both by reason of changes of shape due to heat and by reason of the pressure itself, to make the valves controlling the admission of steam so that they shall be and remain tight. In the compound engine the steam which leaks past the valve of the first or high-pressure cylinder does not leak to waste into the air or condenser, but into a later cylinder in the chain in which it expands and does work.

6. If by reason of doing work in expanding there is a transformation of heat into work which must be compensated by a condensation of the steam in the first cylinder, that water reheated and expanding at the lower temperature does work in the later cylinder of the chain instead of escaping unutilized through the exhaust.

7. In those forms of the compound engine in which the work of the several cylinders reaches the crank-shaft, each through its own crank-pin, there is the advantage of such distribution, for this avoids the concentration for large engines of great energy on small areas, and enables designers to avoid either excessive lengths or inconvenient diameters for their crank-pins. When the crank-pin becomes of inconvenient diameter with respect to the length of the crank, the angle during which the pressure of steam is available to produce rotation of the crank is diminished.

8. The turning effort is equalized when the compound engine is arranged to have its cranks quartering. This diminishes the weight of the fly-wheel.

9. The compound engine gives an opportunity to improve the quality of the steam during the process of expansion when it is possible to use a reheater as discussed in par. 67.

10. The clearance-volumes of the small-diameter cylinder carry less steam by weight than if the steam had to fill the clearance-volume of the large cylinder. The steam in these clearance-volumes is also used expansively in the later cylinder, instead of being rejected as would be the case in the single cylinder.

11. The hottest steam is used in the cylinder of the smallest volume, causing a diminished loss from radiation and condensation due to cool external air

12. The greatest advantage incident to the use of the principle of continuous expansion in several cylinders is that thereby the range of temperature between the initial and final states of each cylinder is less than it would have to be if the expansion were in the one cylinder only. The law of transfer of heat from one body to another is that the transfer is rapid in proportion as the difference in temperature is greater. The less the difference of temperature between the incoming and outgoing steam in any cylinder, the less condensation occurs when the hot steam enters. This is a particularly favorable condition for the large and low-pressure cylinder, whose ends are alternately open to the comparatively low temperature of steam as it is escaping into the condenser. It is of great advantage that the high-temperature steam fresh from the boiler should not have to meet the relatively cool metal and large surface of this low-pressure cylinder.

71. **Disadvantages of the Compound Engine.**—When it is recalled that the low-pressure cylinder is the fundamental unit, and determines the working capacity of the compound engine, it is apparent that by introducing the other cylinders in the multiple-expansion type certain disadvantages are introduced. These are:

1. The cost of the cylinders other than the low. In tandem engines this may mean the cost of piston and cylinder with additional rod, but in cross-compound and fore-and-aft engines it means an additional cost of practically another engine with crank, connecting-rod, cross-head, and the like.

2. The weight and bulk of the additional cylinder adding to foundations and taking up valuable space.

3. The friction-loss due to the work absorbed by this extra cylinder in operating its mechanism, valve, and the like.

4. The loss by radiation of heat from the surface of the extra cylinder and valve-chest, which are surfaces exposed to the air.

5. The loss of work due to the difficulties discussed in pars. 65 and 67, represented by lost area in the work-diagram from friction, free expansion, condensation, and the like. The single-engine diagram, getting the same grade of expansion in the same cylinder, would not experience this.

6. The difficulty connected with regulating the power of the engine when the work varies widely, and the first cylinder has measured off a volume of steam adapted to a resistance different from that upon the engine when that volume of steam reaches the later cylinders. This is the difficulty of governing the multiple-expansion engine, except by regulating devices operating upon each cylinder independently.

7. There has been considerable trouble in compound engines from the accumulation of water in the low-pressure cylinders, particularly when compounding above the atmosphere and using wet steam. The wide range of expansion, the lowered terminal pressure, and the large diameter of the low-pressure cylinder have made this difficulty a very troublesome one in locomotive practice.

It is obvious that the weight to be attached to the above objections is not considered by most designers to be great enough to overbalance the advantages which follow from the principle of compounding.

72. Proportion of Compound-engine Cylinders. — It would be foreign to the present purpose to enter deeply into

the question of the design of compound engines. It may be said that when the conditions indicate that it would be desirable to cut off later than one third of the stroke so as to have less than three expansions, there would be no gain from carrying boiler-pressure very much higher than 80 pounds above the atmosphere, and that the conditions point to the use of a single-cylinder engine. The following table presents accepted practice with respect to a selection of the grade of expansion with fixed boiler-pressures.

When the values for T_1 are those which belong to a

pressure below 80 lbs.,		use single engine;
for pressures between	80 and 100 lbs.	" compound engine;
" " "	130 and 160 "	" triple "
" " above	170 lbs.	" quadruple "

Usual cylinder-ratios of practice for usual pressures with triple engines, are:

Pressures.	Small.	Intermediate.	Large.
130.....	1	2.25	5
140.....	1	2.40	5.85
150...	1	2.55	6.90
160.....	1	2.70	7.25
170	Quadruple engine preferred.		

For quadruple-expansion engines the usual ratios of cylinder-areas and volumes approximate 1 : 2 : 3.78 : 7.70, which may be called 1 : 2 : 4 : 8.

If the principle be adopted that the ratios of areas are to be as the fourth root of the number of expansions, the ratio of the first to the fourth will be as the cube of the fourth root. The ratio will increase as the initial pressure becomes greater; e.g., 1 : 2.2 : 4.8 : 10.6.

Mr. G. I. Rockwood has designed a compound engine with a cylinder-ratio of 7 : 1 with the view of making heat-range equal in the two cylinders, whereby the ratio of surfaces is taken account of, as well as the differences in temperature.

CHAPTER VI.

SUNDRY CLASSIFICATIONS. CONTROL OF ENERGY.

73. Review and Introductory.—The preceding chapters and paragraphs have treated the steam-engine from the points of view first of typical mechanism, and second of the use of steam in engines. These are not the only convenient classifications, but are believed to be the most valuable as foundations for inductive study. A very usual and convenient classification may be based upon the service or use to which the engine is to be put. This would give rise to the following three classes:

(*a*) Stationary engines;
(*b*) Locomobile engines;
(*c*) Portable engines.

The stationary-engine class would be subdivided into factory or mill engines, including power-house engines; pumping-engines, including blowing-engines and air-compressors; hoisting-engines; and miscellaneous engines. The locomobile engines would include locomotives, traction engines, including road-rollers and self-propelling steam fire-engines, and engines for marine propulsion. The portable-engine class would include a wide variety of engines, designed principally for agricultural service, which are intended to be moved about upon their own wheels, so as to be ready for use at the place where they may be. Their design is such that the engine and the boiler are self-contained, and no foundation or permanent structure of any kind is required. Fig. 110 presents the usual type of engine of this class. Sometimes engines of small size are termed semi-portable when their construction is

such that their weight is not excessive, and they are self-contained to the extent that a provisional or temporary foundation of timbers or skids is all that they require as substructures.

In view of the relatively accidental character which the resistance bears to the work of the steam, the above subdivisions are merely mentioned without further comment. When the engine is to be specifically designed with respect to the resistance, as in pumping, rolling-mill engines, locomo-

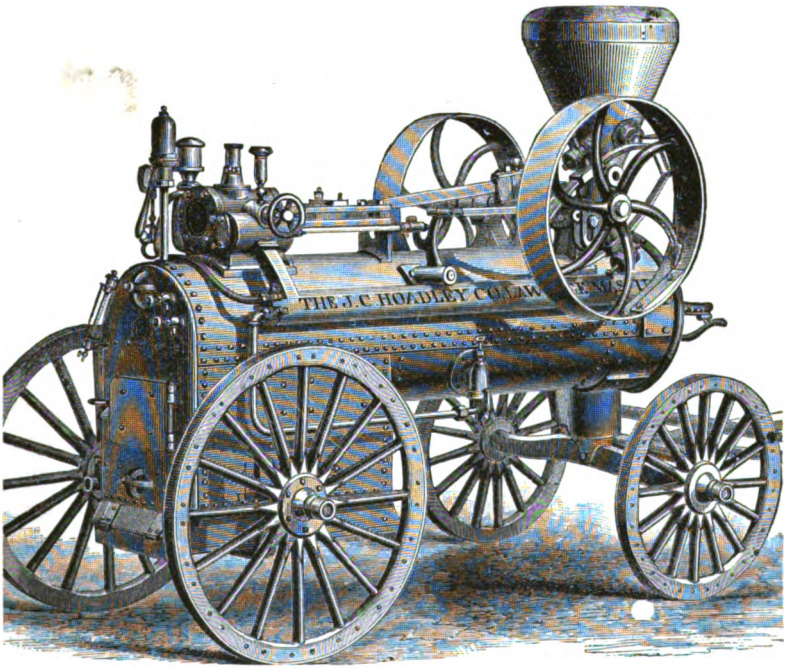

FIG. 110.

tive and marine practice, then the study of the resistance properly becomes the subject of prime importance and must be specifically investigated. For the purpose in hand, which is restricted to the investigation of the steam part of the engine, these considerations open too wide a field to be entered upon, and the reader must be referred to specific treatises.

74. Control of Energy of the Steam in an Engine. Throttling-engines. — A division of steam-engines into

classes, which possesses both interest and importance is based upon the method to be followed in controlling an engine with respect to the energy which it shall deliver in a unit of time, and when the resistance may vary within wide limits. Referring again to the formula for the horse-power (par. 6),

$$\text{H. P.} = \frac{PALN}{33{,}000}$$

or

$$\text{H. P.} = PKN.$$

It will be remembered that K replaces the constant factors AL divided by 33,000, which cannot be altered when the engine has been once designed and the cylinder made. In engines designed for many types of service the number of revolutions in the minute should be kept the same, or N a constant. Hence, when the resistance varies and the energy of the engine is also to vary to maintain equilibrium, the mean pressure P prevailing in the cylinder must be the factor which is made to vary. It can be made to vary in two ways, and the method pursued to produce this change in P gives rise to two great classes of engines.

The energy stored in the vapor of water by heat in the form of elastic tension comes over into the engine-cylinder through a pipe or passage. A valve in this pipe or passage when closed entirely will serve to shut off the engine from its reservoir of energy (the boiler). When partly closed by such a valve the passage between the engine and boiler is choked or throttled, and hence this valve has been called the throttle-valve. An engine whose design is such that the value for P in its horse-power formula is diminished by closing such a throttling-valve, or increased by opening it wider, is called a throttling-engine. The effect of this process of throttling upon the diagram of effort (par. 44) is to diminish the length of the vertical ordinates, and diminish in this way the area of that diagram, and hence the foot-pounds of work per stroke. Fig. 111 shows several diagrams superposed in which the variation of area is secured by lowering the average

height of the card. The opening and closing of a throttling-valve in the steam-pipe of a throttling-engine is usually effected by a mechanism which, from its function to govern

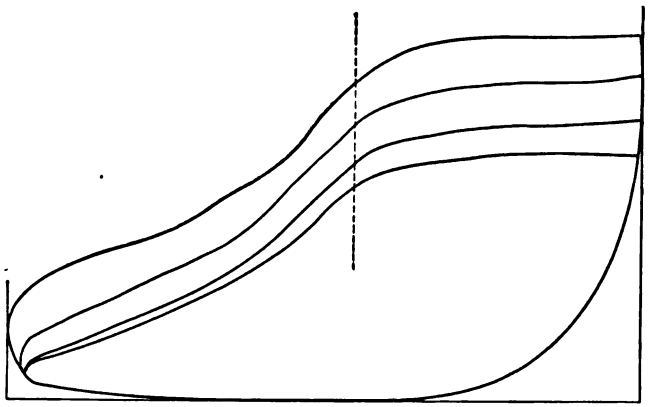

FIG. 111.

the pressure in the cylinder, is called a steam-engine governor. The features of this mechanism will be discussed in the sequel.

75. Cut-off Regulation of a Steam-engine. Cut-off Engines.—It will be apparent from inspection of the diagram, Fig. 67, par. 44, that it will be possible to diminish the area of such work-diagram by diminishing the proportion of the stroke during which admission of steam occurs. By shortening the length of the upper line of the diagram (Fig. 112) it will be obvious that the same effect in diminishing the energy of the stroke will be produced as if the height of the diagram had been shortened, as explained in the preceding paragraph. It will be observed that the pressure of the steam which enters the cylinder has not been reduced or throttled by closing an opening, but that the steam is permitted to enter the cylinder at full pressure, but for a longer or shorter time, according as the work to be done has increased or diminished. In other words, engines of this class vary the point of cut-off to regulate their energy, and are therefore called variable cut-off engines.

All engines require a mechanism adapted to admit the steam at one end of the cylinder, and exhaust it at the

other at proper intervals. This mechanism is called the valve-gearing, and has for its function the distribution of the energy and pressure to the working face of the piston. All engines, whether of throttling or cut-off regulation, will have an independent throttle-valve under the control of the engine runner or driver.

In the variable cut-off engines the adjustment of the length of the period of admission can be done either by hand, or it can be arranged that this variation shall be effected automatically by a mechanism for this purpose. When the variation of ad-

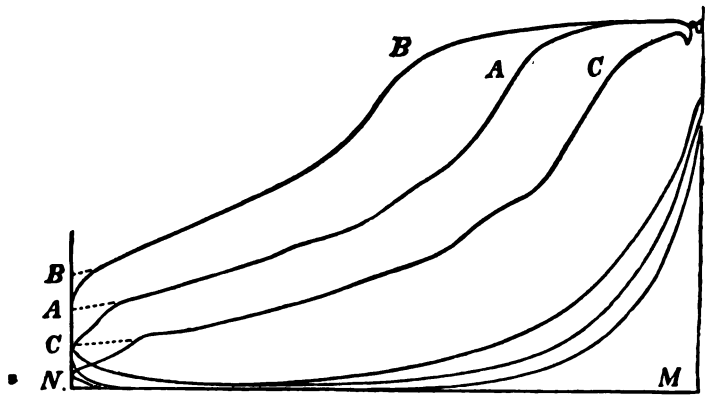

FIG. 112.

mission or of the point of cut-off is made by hand, or through the intervention of a human intelligence, the engine is called a variable or adjustable cut-off engine. Where the variation in the period of admission is made by an automatic mechanism (usually a governor), the engine is called an automatic cut-off engine. The opening and closing of the distributing-valves is always effected by the engine itself in modern engines, and in this sense all engines are automatic. But when the mechanism causes the time at which the cut-off occurs to be varied automatically the term automatic cut-off becomes applicable.

76. Advantages and Disadvantages of the Throttling-engine.—An engine designed to have the pressure varied upon the piston by throttling the steam-pipe conveying the energy offers the following advantages:

1. The engine is cheap to build and to buy. The valve-gear for distribution will be simple and therefore inexpensive, and the governor controlling pressure only will be extremely simple, and its valve need not be complicated.

2. The effort of the steam to drive the piston will be exerted through a considerable portion of the stroke. Hence there will be less inequality in the steam effort at the beginning and end of the stroke.

3. The effect of driving the steam through the throttling-valve or orifice is to bring about the equivalent of a superheating of the steam. The pressure on the boiler side of the valve is greater than that on the cylinder side. Hence if the steam were saturated at the higher pressure, it will have a temperature on the low-pressure side higher than belongs to that pressure, and is therefore in a superheated condition. This has a tendency to dry out moisture in the steam and to diminish condensation in the cylinder. The heat corresponding to friction in the throttle-valve area must also appear in the form of heat, some of which serves to heat and dry the steam.

4. The throttling-engine for these two latter reasons is likely to suffer less from cylinder-condensation. The diminished range of temperature between the two ends and the relatively higher terminal pressure are the reasons for this.

The disadvantages of the throttling-engine are the advantages for the cut-off type. They are:

1. It is not as sensitive as the cut-off engine to instantaneous variation in the resistance. The control by throttling can only take effect in the cylinder at an interval after the governor has acted to throttle the steam or to open the valve wider. The engine meanwhile has had a chance to make at least one stroke under the conditions which prevailed before the change of condition was announced to the governor.

2. The throttling-engine does not regulate as closely to uniform speed as the cut-off engine. The reason for this is partly that explained in the preceding sentences, and partly because the method of controlling by the motor fluid in bulk

cannot be expected to be as exact as when the control is exerted immediately upon each reciprocation of the piston.

3. The exhaust will usually be at a higher pressure in a throttling-engine, causing the rejection of more heat from the cylinder than when, by early cut-off and high expansion, the heat is more completely withdrawn from the steam in the form of work.

77. Advantages and Disadvantages of the Cut-off Engine.—When the regulation of effort is secured by causing the length of the admission period to vary either automatically or by hand and without diminishing the initial pressure, the following advantages are secured:

1. The effort is controlled per stroke of the piston. Just enough steam is admitted into the cylinder to do the work of that stroke.

2. For this reason the engine is sensitive immediately to variations of the resistance.

3. It is more certain to be kept by the governing appliance at the uniform or fixed speed, since a variation caused in the governing appliance operates immediately to control the admission for the next stroke.

4. The full energy present in the elastic tension of the steam as it comes from the boiler is exerted upon the piston without undergoing the loss from throttling. This may or may not be considered an advantage (see par. 76 above).

5. The cut-off engine derives full advantage from the principle of expansion and the gains from expansive working (see par. 44). Lower terminal pressure causes less heat to be rejected into the exhaust, and reaps the full advantage of having as great a difference between the initial and final pressure and temperatures of the steam in the cylinder as is consistent with doing the foot-pounds of work required for that stroke.

The disadvantages of the cut-off engine are the contradictories of the advantages of the throttling-engine:

1. There is a wide difference in the pressure and effort at the two ends of the stroke when the engine is working with an early cut-off. This compels a massive fly-wheel to take care

of these wide variations, and to give out in the latter part of the stroke the excess of work stored in it at the beginning.

2. The design and complication of valve-gear to provide for properly varying the admission.

3. This complication usually makes the engine costly to build and to buy. If closeness of regulation without the intervention of human agency is not worth paying for, the superior economy of the automatic cut-off engine does not always pay the interest on the difference of first cost.

4. The lower value for the terminal temperatures and pressures increases the amount of cylinder-condensation by reason of the better opportunity for the evaporation of moisture present in the cylinder either mechanically entrained or as the result of radiation or the doing of work. The evaporation of such moisture under reduced pressure makes the demand for the necessary heat for vaporization from either the working steam or the metal of the cylinder. It is this condition which accounts for the result experimentally found, that

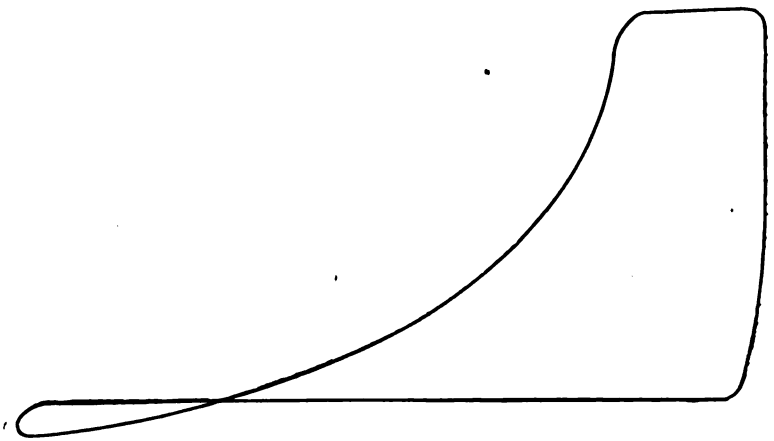

FIG. 113.

in non-condensing engines, such as the locomotive, it does not pay to carry the expansion further than is given with the cut-off at one third of the stroke.

5. It may happen when the engine is very lightly loaded

that the cut-off will take place so early that the final volume of the cylinder will be greater than that which the volume of steam admitted would fill at the pressure of the exhaust-stroke. The line representing pressures will therefore cross the line representing the return-stroke before the stroke is completed, forming a loop at one end (Fig. 113). The area inclosed in that loop is a negative work in a single-cylinder engine and represents a pumping-action of the piston, because when the exhaust is open the material in the exhaust-pipe would have a tendency to flow back into the cylinder instead of away from it. In compound or continuous-expansion engines the area of this loop represents expansion of the steam in the receiver or clearances doing no work, and is therefore a distinct loss.

78. Summary and Conclusions.—For many classes of work in power-house service the variation of resistance is so wide and so rapid that it would be inconvenient or impracticable to depend on human quickness of perception to provide for it. On the other hand, where the effort is constant, as in pumping, or is progressively varying, as in hoisting from deep mines, and in railway and marine practice, the other method of regulation is close enough to be satisfactory, and particularly where the engine-runner must be in attendance in any case. The automatic cut-off engine is usually the more economical of the two, but it is not a settled question whether all of this economy is due to the method of regulating. The automatic cut-off engine is usually better built in every way, and such excellence of construction would explain some of its economy.

It would be apparent, therefore, that the appliances for affecting regulation of effort are the next questions to be considered in developing the steam-engine, and that therefore the valve-gearing and the governor present themselves for study. As the governor must be interdependent upon the valve-gearing, while the latter may be independent of the governor, the valve-gearing for steam-engines will form the subject of the next chapter.

CHAPTER VII.

VALVES AND VALVE-GEARING.

79. Introductory.—The earliest steam-engines were operated entirely by the throttle-valve. A single valve in the proper pipe was opened and closed (by hand at first) so that energy was admitted and exhausted at will. The idea of having the valve for the cylinder self-acting and driven by the moving mechanism is attributed to a lad named Humphrey Potter. He attached the handle of the cock-valve or faucet then used for this purpose to the rising and falling rods of an early pumping-engine as far back as 1713. The rude scoggan or catch with cord connection originated by Potter was improved by Henry Beighton (1718), and the tappets and catches characteristic of the Cornish engine were modifications of hese early ideas.

The functions of the valve or valves which distribute steam in a steam-cylinder are primary and secondary. The primary function is to admit the steam from the boiler to one side of the piston, while the exhaust-steam filling the other end of the cylinder is permitted to escape with the least possible reistance. The secondary functions are to close the admission of steam at the point necessary to give the expansion desired, and to close the exhaust-orifice at such a point in the return-stroke that a certain volume of steam shall be caught and compressed behind the piston, so that when the return-stroke is completed there may be caught between the piston and the head of the cylinder a volume of steam to serve as an elastic cushion. The ideal final tension of this entrapped steam-cushion should be that of the steam in the boiler or the valve-chest.

The opening of the inlets and outlets of the cylinder should be so timed with respect to the stroke of the piston that pressure may not be brought too soon against the piston-head, nor the exhaust opened until the expanding steam has done its entire work for that stroke.

The valves for admitting and distributing steam in an engine-cylinder may open the ports which they control either by lifting from their seats or by sliding upon their seats. Hinged or flap valves are not used for steam-engines. When the engine is a double-acting one there must be provision to connect each end of the cylinder with the boiler and each end with the exhaust-pipe. When the engine is single-acting it is only necessary to connect one end to boiler and exhaust-pipe alternately. Apparently the simplest arrangement would be to have four valves—one at each end for steam and one at each end for exhaust. This principle is represented in the usual river-boat steam-engine (Fig. 30), and in the ordinary Corliss engine and its derivatives.

A second great type makes use of separate valves for admitting steam at the two ends, but the exhaust-outlets for both ends are controlled by one single valve. Such engines are called three-valve engines.

The third arrangement is to have one valve for admitting steam to both ends and another controlling the exhaust from both ends. An engine of this type is the Porter-Allen. Such engines are called two-valve engines.

A fourth class have one single valve so designed as to take care of inlet and outlet functions for both ends. Such are the great majority of steam-engines for stationary use, all locomotives and marine engines. The great importance of the single-valve engine and its wide distribution form the reason for considering it in advance of other forms.

80. Three-way and Four-way Valves.—It will be apparent when one end of a cylinder is to be put into alternate communication with boiler and exhaust-pipe that the ordinary three-way valve can be made to fill these requrements by causing it to vibrate through an angle of 90. Fig. 120

shows the position of the plug of such a cock when the steam-pipe from the boiler is to be connected to the cylinder, and

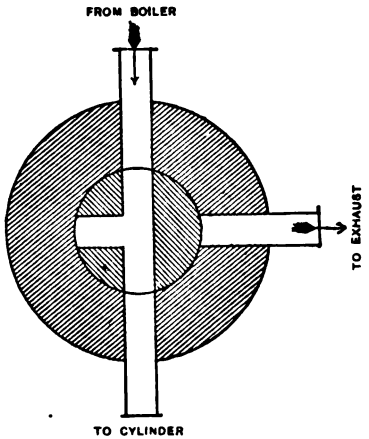

FIG. 120.

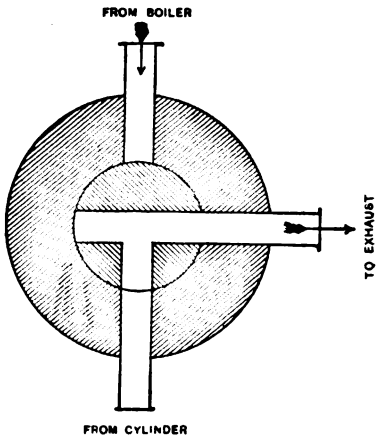

FIG. 121.

Fig. 121 shows the position 90° distant when the cylinder has been connected to the exhaust-pipe. It will be seen that the

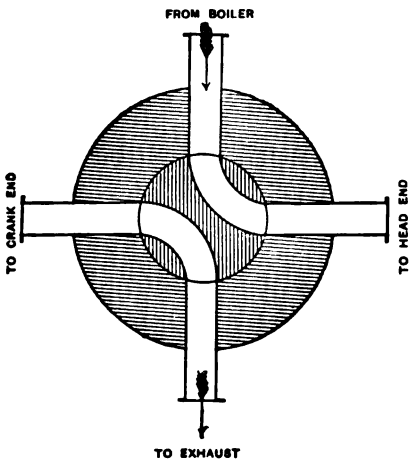

FIG. 122.

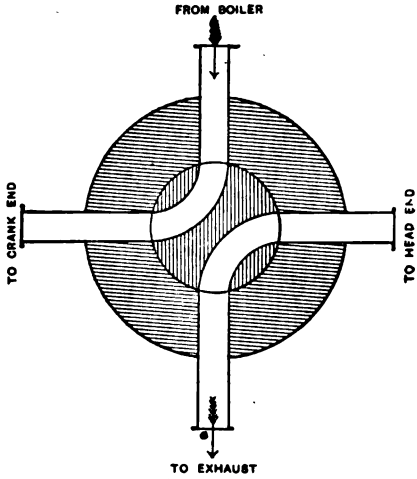

FIG. 123.

motion which connects the cylinder with one opening closes its connection with another.

It is not difficult to modify the three-way cock that it may

serve to distribute steam in and out of both ends of a double-acting engine. It is only necessary to make the valve a four-way valve as shown in Fig. 122, and the alternate vibration of such a cock from the position shown in Fig. 122 to that in Fig. 123 is all which is required to enable such a valve to discharge the primary functions of a valve-gear. The rocking or vibrating motion of the plug needs only to be so timed with respect to the crank-motion that the admission and exhaust functions may begin and end for each end of the cylinder when the piston and crank are on their dead-centres.

The vibrating or plug valve as the distributing-valve is a very early form, and is still used in its old form in some small engines for the sake of cheapness, and in a modified form in some large and elaborate designs. The objections to the old plug cock-valve are:

1. The valve and its casing cannot usually be cylindrical, because unequal expansion by heat is apt to cause the casing to seize the plug with a firmness which will cause valve-rods and pins to buckle and shear before the valve will turn. This occurs because the casing is exposed to radiation to the outer air and protects the plug from its action. The plug will therefore be hotter than the casing, and if fitted snugly when cold they will seize together when hot.

2. If fitted loosely enough not to seize, cylindrical plug-valves will leak. To prevent this they are usually made slightly taper, so that just the necessary friction and tightness may be secured by adjusting the plug lengthwise in its conical seat or casing. These taper fits are not so easy to make perfect except with special machinery. Even then in large sizes the large end expands more than the small, and for a given angular motion the large end slides over a greater space than the small. This tends to produce unequal wear and leakage. The taper plug can be refitted to its seat when worn, which cannot be done with a cylindrical fit. The taper is usually one in sixty-four or thirty-two.

The vibrating-valve can be made, however, into a very satisfactory arrangement by either making the plug proper a shell

which is independent of the axis of the cylinder in which it turns—this is the Corliss valve—or else by cutting away all of the plug except just the surface required to close the opening through the casing which the valve must control. This is a feature of the Wheelock valve and of many derivatives and modifications of the Corliss (see Fig. 181). They present the advantages which belong to an arrangement which opens a wide area by a comparatively small motion of the valve.

Another method of avoiding the difficulties of the cylindrical or conical valve is derived by enlarging the radius of the casing of the valve until it becomes infinity, when the valve-seat becomes a plane and the vibration of the plug becomes a straight translation or sliding of a block upon a flat surface. The great advantage of the flat slide-valve and seat is the ease and certainty with which plane surfaces can be made in practice, and that when the two surfaces are true and of homogeneous material the sliding of the valve upon its seat tends to wear the contact always closer and diminish leakage. It is this practical consideration which has had much to do with the abundant distribution of the flat sliding-valve. The construction of the lifting-valve will be referred to hereafter.

81. Plain Slide-valve working Full Stroke.—It will be apparent from Fig. 124, which represents a four-way cock

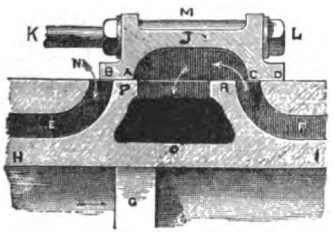

FIG. 124.

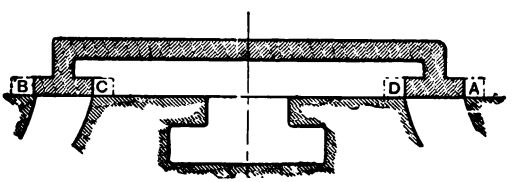

FIG. 125.

developed upon a plane in the ordinary form in which it is used in practice, that there is present the inlet from the boiler coming in to the top of the box which will be called the valve-chest in which the valve moves. Passing outward from below in the middle of the developed surface on which the valve

seats is the exhaust-pipe orifice; it has become the exhaust-port on the valve-seat. The two other inlets into the valve-seat which were present as radial openings in Figs. 122 and 123 appear in Figs. 124 and 125 as ports or openings one at each side of the central line of symmetry through the steam-pipe and exhaust-port.

As the valve stands in Fig. 125, its length from out to out horizontally is just the length from out to out of the steam-ports. Both ports are closed, but the motion of the valve in either direction will cause steam from the boiler to pass into one or the other of the ports to reach the end of the cylinder and drive the piston. It would appear then that the position of the valve shown in Fig. 125 is that which belongs to the two dead-centres of the piston.

It will be further seen that the hollow in the under side of the valve has a net length the same as the length between the inner edges of the steam-ports. Hence when the valve moves in either direction so as to admit steam by its outer edge to either steam-port, by that same motion the port at the other end is opened by the inner edge to allow steam to escape from the other end of the cylinder into the hollow of the valve which is always in connection with the exhaust-port and pipe. The distance between the edges of the steam-ports out to out is immaterial within limits, since the only effect of separating these outer edges is to lengthen the valve. To do so, however, is to increase the area upon which pressure of steam acts to press the valve to its seat, and hence to increase the force necessary to slide the valve. The width of the ports is fixed by the area which they must have in order to pass the steam which the engine requires per stroke without imposing an excessive linear velocity for that steam. The length of the port in the direction perpendicular to the plane of the paper is conditioned by the diameter of the cylinder, which of course it cannot exceed. It can at best be equal to that diameter, but it is more usual to make it somewhat less. With the length thus fixed the area of the port should be such that the linear velocity of the steam through the port should not

exceed 100–150 feet per second, or 6000–8000 feet per minute. Simple calculations for this area in terms of the horse-power of the engine appear in the appendices.

It is of advantage not to make the port too wide in the direction of the motion of the valve to the right or left, since it will be apparent that the motion of the valve from this central position to the right or left should be equal to the width of the port in order to open it wide. In other words, the throw of the valve and the port width should be the same under the conditions now being considered. If the valve-throw from its central position is greater than the port width, an unnecessary force is expended to slide the valve. If the port width is not uncovered by the throw of the valve, an unnecessary surface is exposed below the valve to the steam on its way from the valve to the piston, causing losses by radiation, by contact, by condensation, and by unnecessary clearance-volume, which the steam fills to no purpose. The throw of the valve is the distance which it moves from its central position in each direction. The travel is the distance which it moves from its extreme position at either side to the other extreme position, and is therefore twice the throw. If the valve is operated by a crank or a modification of it, the radius of the crank will be equal to the throw, and also equal to the port-opening. It is susceptible to demonstration that the volume of the cylinder and the area of the port-opening increase according to the same law when the motion of each is controlled by a crank; but the exceeding convenience of the crank induced its adoption before this theoretical peculiarity had been elaborated.

82. The Eccentric is a Crank.—The throw of most engine-valves will be comparatively small as compared with the stroke of the piston; and, in engines of considerable size, when the shaft is of a large diameter it becomes inconvenient and impossible to cut away the large shaft so as to get the small crank in the middle of it. It is furthermore inconvenient to drive the valve in most engines from a crank at the end of the shaft. It does not affect the peculiarity of

a crank to enlarge its pin. So that if the typical crank AB shown in heavy lines in Fig. 126 have its crank-pin successively enlarged until the diameter of the latter becomes so great that the circle representing it surrounds the shaft which is the centre of motion of the crank, there will be no difference produced in the motion of such a pin as it revolves around the original centre of motion. The enlargement of the pin has produced an *eccentric*, in which the distance between the centre of motion and the centre of figure is the radius of the original crank. The valve driven by an eccentric is therefore

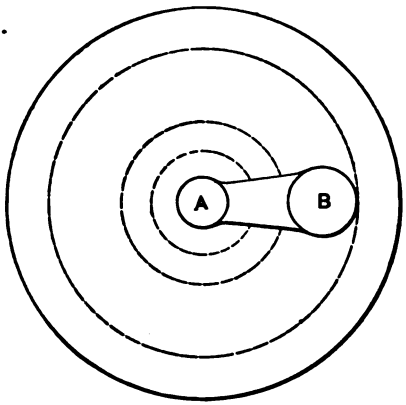

FIG. 126.

driven by a crank, and the use of an eccentric not only makes it unnecessary to cut away and weaken the engine-shaft, but has the further advantage that the direction of the centre-line of the crank can very easily be changed with respect to the engine-crank, should it be desirable to alter and adjust the angular relation between these two. When valves are not driven by a crank or eccentric, it will be found that the motion will be given either by cams or by such a combination of rods or links as to constitute a link-motion. These methods of driving valves will be discussed in proper course. Fig. 4 shows the valve driven by a crank from the end of the shaft, but in the majority of engines where the valve is driven directly it will be found that the eccentric is used.

83. Setting of a Plane Slide-valve working Non-expansively.—From an inspection of Fig. 124 it will be observed that the valve has the shape somewhat like a letter D, resting with its straight side upon the seat. For this reason this valve has been called the D slide-valve (the German name is Muschelschieber, or shell-slider). It will be observed that if the piston is at its dead-centre at the right of the page in Fig. 125, the valve should move towards the left to admit steam to drive it. If the piston is at the left of the page, the valve should move towards the right. It has been further shown that when the engine-crank is at one of its dead-centres, and in a horizontal line in a horizontal engine, the valve is in its central position with its crank therefore standing vertically up and down. The fair conclusion then is that in an engine working non-expansively the valve-crank is 90° distant from the engine-crank. Is it to be 90° ahead or behind ?

When the engine throws over (par. 11) and the piston is on its dead-centre at the right of the page, it is obvious that the valve has been at its right-hand end and has returned to its central position from the right to reach the position shown in Fig. 125. This follows because it has been admitting steam for the stroke of the piston from left to right, and has closed the port at the left at the end of the stroke by coming from the right. It is therefore to admit steam to the right-hand port by moving towards the left, which it can only do when the crank driving the valve is standing vertically upwards. It is assumed that the engine-shaft is at the left as the observer faces Fig. 125, and that the rotation is contrary to the hands of a clock. It is further assumed that the length of the rod connecting the valve-crank or eccentric to the valve is of exactly the right length, and that the valve is connected to the eccentric without the interposition of a vibrating arm or rock-shaft, which would reverse the motion imparted by the valve-crank. Under these assumptions the valve or crank is to stand with its centre-line making an angle of 90° with the engine-crank ahead of the engine-crank in the direction in

which the engine is to turn. Hence the directions for setting the valve for a non-expansive engine of this sort are:

1. See that the valve-rods are of the right length so that the valve opens the ports equally at both ends of its throw. This is called making the valve run square.

2. Set the main crank of the engine on either dead-centre. This can be done either by eye, or more exactly by the following process. Turn the engine over until the crank is nearly at its dead-centre and scratch a mark on cross-head and guide which shall indicate such position. Take a beam-compass or trammel, such as shown in Fig. 127, and put one point in a centre-punch mark made on the rim of the fly-wheel while the other end rests on a similar prick-punch mark on the frame or bed-plate of the engine. Then turn the engine-crank past its centre until the mark scratched on cross-head and guides comes to coincidence again, and the trammel in the fixed point on the bed-plate locates by its other end a second point in the fly-wheel rim. It is apparent that the first and second of these points in the rim indicate two

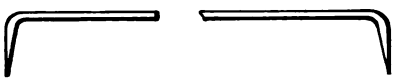

FIG. 127.

angular positions equally distant from the dead-centre on opposite sides of it. The point half-way between them on the rim should be the point in which the same trammel standing with one end in the fixed point on the bed-plate should reach when the engine is on its true dead-centre.

3. Slip the eccentric around the shaft in the direction in which the engine is to turn until it is 90° ahead of the engine-crank, if this can be observed. If not, it is reached when the valve is in its central position, line and line with the edges of the steam-port. Then the eccentric is made fast.

4. Turn the engine through 180° to bring the main crank at its other dead-centre to test the accuracy of the adjustment.

If the engine has a rock-shaft which reverses the motion from the eccentric, the eccentric should be set 90° behind

the engine, or at a position 180° distant from that which it occupies when the motion is direct.

If the engine throws under instead of over, the eccentric is still 90° ahead of the crank, in the direction in which the engine is to turn, but is 180° distant from the position which it occupies when the engine throws over.

The expansion of the valve-rod by heat must not be overlooked in its effect upon the length of such rods. It will lengthen the rods of a valve directly connected, and either lengthen, shorten, or be without effect upon the rods which are connected to a rock-shaft. If the rod from the eccentric to the rock-shaft and from the rock-shaft to the valve were of the same length and of the same temperature, the effect of expansion would be compensated.

84. The B Valve.—In some forms of engines, particularly pumps, it is desirable that the motion of the valve to admit steam should be in the same direction as that which the piston had before it completed its stroke. In the D valve these motions are opposite. The valve to meet this condition must differ slightly from the D valve in its shape, and from the form which it takes it is called the B valve (Fig. 128). It admits

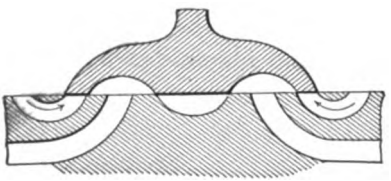

FIG. 128.

steam into the one hollow of the B by sliding past the end of the seat or over the edge of an outer port. The other hollow is by this motion put into communication with the other steam-port and the exhaust, so that its functions are the same as those of two D valves, with the exception that the outer edge of the valve does not act. The details for setting the directly connected B valve are the same as for setting the D valve with rock-shaft.

85. Lap in the Slide-valve.—It will be observed from Fig. 125, and the proportions of valve and seat as there presented, that there is no interval during which admission of steam does not take place at one end of the stroke or the other, except the instant of passing the two dead-centres. The diagram of effort in a cylinder thus controlled would be that shown in Fig. 66, which presents the work of a cylinder without expansion. Admission and exhaust take place throughout the full stroke. It has been seen that this is not usual or desirable, but that there should be a period towards the end of a stroke during which steam enclosed in the cylinder should have an opportunity to expand and lower its pressure. This must be secured by cutting off admission, or leaving a period in the motion of the valve during which both steam-ports shall be closed from connection with the boiler.

The valve of Fig. 125 cannot be made to do this by reason of its length being only that from out to out of the ports. The valve must be lengthened in order that it may close one port and be still sliding upon its seat while the piston is moving towards the end of its stroke, and so that it shall just reach the position of opening the new port at the other end as the piston comes to rest at the dead-centre. This addition of length must be symmetrical on both sides of the centre-line, and the increase at each end over the fundamental length of the non-expansive valve is called its lap, *ab* in Fig. 129.

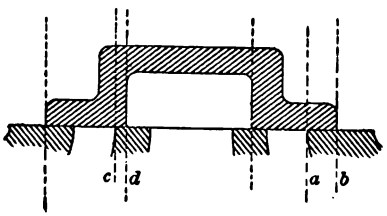

FIG. 129.

Lap may be defined as the amount which the valve standing in its central position projects over or laps beyond the outer or steam edge of the port.

86. Effects of the Lap.—The effects of the lap are:

1. To compel the steam in the cylinder to work expansively, or to produce the cut-off of admission before the end of the stroke. It will be apparent from Fig. 130, which shows a valve on its seat moving from right to left and distant from its central position a distance equal to the lap on the left-hand end, that it has just cut off admission from the left-hand end of the cylinder, and must move to the left through a distance equal to twice the lap before it can open the right-hand port. It must open this latter port at the instant that the piston is ready to begin its stroke from right to left.

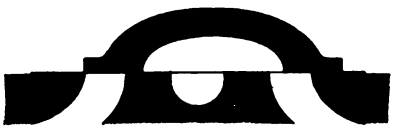

FIG. 130.

Consequently the piston will have moved without admission during a period of angular motion at the end of its stroke corresponding to that required to move the valve through twice the lap. This is an angular motion corresponding to twice the angle whose sine is the lap. This being so, the instructions for setting the slide-valve without lap or without expansive working (par. 83) require to be modified. The valve-crank or eccentric is ahead of the main engine-crank not only the 90° there deduced, but is to be ahead 90° + an angle whose sine is the lap.

2. Hence the second effect of the lap is to set the valve-crank forward and prevent the valve being in its central position when the engine is at its dead-centre.

3. The consequence of this second peculiarity is that the opening of the exhaust hollow in the valve to the two ends of the cylinder becomes displaced, and does not take place as heretofore when the engine passes its centres. The exhaust on the expanding or completed stroke is preopened, because the valve passes its central position before the piston reaches the end of its stroke. It must do this because it has to slide

through a space equal to the lap in order to open the valve at dead-centre for the ensuing stroke. This has also preclosed the exhaust-port at the right-hand end by the same action and for the same reason. The preclosure of the exhaust is of no great disadvantage within limits, inasmuch as by this action the entrapped exhaust undergoes compression after its outlet is closed and there is produced the cushion which was referred to as desirable in par. 79. The preopening on the expanding side, however, is absolute loss, since tension of the driving steam which should have followed the piston clear to the end is released into the exhaust, and is wasted.

87. Inside Lap.—When the term lap is used without qualification it means lap added to the outside or steam edges of the valve. In order to prevent prerelease of the expanding steam, from too early opening of the hollow of the valve to the steam-port, the valve-face can be widened towards the inside by adding metal which shall narrow the opening into the hollow. The normal valve has its hollow of the same length as the distance between the inner edges of the steam-ports. When the valve stands in its central position, the distance by which the length of the hollow is less than the distance between the inner edges of the ports amounts to twice the inside lap. Or, in other words, the inside lap is the distance which the valve must move from its central position in either direction in order to open the corresponding end of the cylinder to the exhaust-port (see *cd*, Fig. 129).

88. Effect of Inside Lap.—The effects of inside lap are:

1. To prevent prerelease of expanding steam before the stroke is completed.

2. To close the exhaust-outlet from the cylinder before the exhaust-stroke is completed. This produces a compression. The effect of this compression on the practical working of the engine is fourfold.

(1) It serves to produce a spring or cushion of elastic steam which serves to absorb living force in the reciprocating parts and bring the latter to rest by a gradual force exerted to take up lost motion in the joints in the direction in which

the next working stroke is to strain them. Without this cushion the living force of the reciprocating parts must be absorbed by the crank-pin, which will produce tension on the joints just previous to the compression-stroke, and compression of the joints just previous to the tension-stroke. The steam-cushion makes the engine run more quietly.

(2) This compressed steam after exhaust-closure fills the clearance and port passage with steam otherwise wasted, so that the entering steam when the valve opens does not have to fill such waste room. Generally the compression should be so calculated that the final pressure of the steam compressed into the clearance-volume just equals the pressure of the steam coming from the boiler.

(3) The compression caused by inside lap exerts an upward pressure upon the valve which tends to counteract the downward pressure from the boiler, and thus makes the valve move more easily upon its seat for that part of the stroke during which the compression occurs.

(4) The effect of the compression of the exhaust-steam is to raise its temperature and with it the temperature of the cylinder-walls. This heat is due to the absorption by the steam of the work done in compressing it, and consequently the entering steam on the new stroke undergoes less condensation in heating the metal.

Excessive compression due to excessive inside lap or too early closure of the exhaust-port diminishes the power of the engine to the extent represented by the unnecessary work done in compression. This may be enough to lift the valve off its seat, which will be shown by a knock or slam when the valve opens and it comes down into contact with its seat.

89. Exhaust-clearance.—It will be apparent that the inside or exhaust lap will make the exhaust sluggish by reason of its tendency to contract the exhaust-passage and produce the effect called wire-drawing. This danger is most to be dreaded in engines of high rotative speed (par. 35); and to avoid this difficulty in engines of this class designers have sometimes lengthened the hollow in the valve, so that when it

stands in its central position the distance between the edges of the hollow is *greater* than the distance between the inner edges of the steam-ports. The distance which the hollow lacks to enable it to meet the inner edge of the port is called exhaust-clearance or inside clearance. Its use is restricted to high-speed engines and to those in which the expansion by means of lap is not carried very far. The difficulty would be from the too early release of the expanding steam. Exhaust-clearance is sometimes called also exhaust-lead. Its effects are to free the exhaust and to diminish back-pressure at the beginning of the return-stroke.

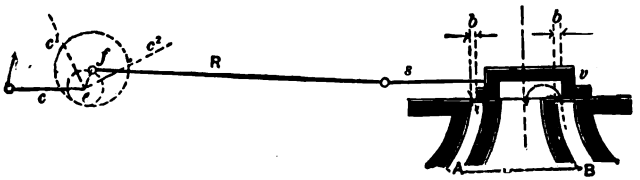

FIG. 131.

90. Lead in the Slide-valve.—It is often considered desirable to have the valve partly open before the piston reaches its dead-centre, in order to bring full boiler-pressure on the piston at the beginning of its stroke. In other words, to have the valve lead the piston. The definition of lead is the amount which the steam-port is open when the piston is at its dead-centre ready to begin its stroke. Referring to Figs. 124 and 131, the port-opening between the edge of the valve and the edge of the port is the lead. It will be seen at once that the lead is a matter of adjustment merely, while the lap is a matter of construction of the valve. Lead may be varied, but the slide-valve lap cannot.

It will be apparent that the effect of lead on the setting of the valve-crank or eccentric will be to increase still further the angular advance of the valve-crank beyond the 90° advance discussed in par. 93. The setting of a valve having both lap and lead requires that, after the valve has been set in its central position with the valve-crank 90° ahead of the main crank, the eccentric is to be set forward in the direction

in which the engine is to move through an angle whose sine is the lap, and then through a further angle whose sine is the desired lead.

91. Effects of Lead.—The effects of sliding the eccentric forward in order to give lead at the steam-edges are five.

1. To increase the angular advance and modify the setting adjustment.

2. To increase the expansive working by causing the steam-edge of the valve to close the admission-port by so much earlier as the valve has to move before the piston reaches its dead-centre in order to give the determined lead.

3. The effect which these two phenomena have is to increase the distortion of the exhaust period. The prerelease and compression are increased, or the effect of the inside lap is neutralized at one end and increased at the other.

4. The clearance-volume and port passages are filled with steam entering the cylinder before the piston reaches its dead-centre, so that full boiler-pressure comes on the piston at the very beginning.

5. The living force of the reciprocating parts is arrested by this cushion of live steam from the boiler. The effect is the same as if it were done by the exhaust-cushion, but it is produced by steam which must be paid for instead of by steam which would otherwise be wasted.

CHAPTER VIII.

VALVE-GEARING, CONTINUED.

92. Setting of Slide-valve without Access to Valve-chest. Setting by Sound.—The slide-valve of an engine works in a valve-chest. This is a box either cast in one piece with the cylinder and arranged with lids or bonnets by which access can be had to the valve and seat, or else the valve-chest is cast separately and secured to the cylinder-casting by carefully made steam-tight joints, which are kept tight by bolts. The opening of the valve or steam-chest for the purpose of setting the valve is to be prevented when possible, inasmuch as to break a satisfactory steam-joint is a thing which is to be avoided. It is by no means difficult to transfer the motion of the valve to reference-points outside of the valve-chest so as to avoid the necessity for getting into the chest. This is easily done by means of a trammel as presented in Figs. 127 and 132.

It will be apparent that if one end of the trammel is placed in a centre-punch mark on the valve-chest at such a point as, for example, on the stuffing-box, the other end can be used to fix upon the valve-stem itself a point which shall indicate the position of the valve within. If the engine be turned over by hand so that the valve-stem is made to travel to the right, the trammel can be made to locate a point on the valve-stem in which the outer end of it fits when the valve is all the way over to the right (Fig. 132). If the engine be turned over further, so that the valve-stem slides to the left, the trammel locates a point on the stem which belongs to the extreme of the travel to the left. Half-way between these a point can be marked by a centre-punch, and when the point

of the trammel lies in that punch-mark, the valve is in its central position. The engine being located with its piston upon its dead-centre, the eccentric can be slid around until the valve is in its central position, and with the trammel in place the valve-stem can be moved through a distance, first, to bring the lap line and line with the port edge, and, secondly, the further distance proper for the desired lead. As in par.

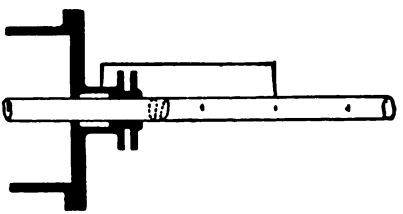

FIG. 132.

83, due regard must be had to direction of motion and to the possible reversal of connection by rock-shaft or otherwise.

Another method of setting the valve without taking off the valve-chest lid or bonnet is to depend upon the regular pulsations of the exhaust, as they furnish an indication to the ear. Their regularity in time indicates a symmetrical motion of the valve, and their regularity in intensity or volume indicates admission of steam and expansion symmetrically at the two ends. This is much the most sensitive method in two-cylinder engines with quartering cranks, as in the locomotive.

The last appeal as to accuracy of valve-setting is given by the steam-engine indicator (Chapter XXX), which should give symmetrical and equal diagrams of effort at the two ends of a cylinder with valves properly set.

It will be apparent that it is possible to correct something of the irregularity in an unbalanced vertical engine (par. 17) by the setting of the valve so as to compensate for the difference in effort due to the weight in the reciprocating parts on the upward and downward strokes. When the piston-rod is of large diameter in a horizontal engine it will subtract a measurable area from the surface exposed to pressure. This

irregularity can be compensated for by valve-setting. In an engine having a relatively short connecting-rod more power is absorbed in accelerating the reciprocating parts on the stroke from the inner dead-centre than is required to accelerate from the outer dead-centre. The reason for this is that the connecting-rod compels the piston to move more than half-stroke as the crank revolves from 0° to 90° on the outgoing stroke, and less than half-stroke as it revolves from 180°to 270° on the incoming stroke. As the piston does not have so far to go in equal time, it does not have to move so fast in that time. It is a minor irregularity, and can be compensated in the valve-setting.

93. Motion-curves for Slide-valves. — A convenient method for representing graphically the motion of a slide-valve upon its seat was early elaborated by Continental engineers and mathematicians. If a line be drawn vertically with a length representing, on any convenient scale, the stroke

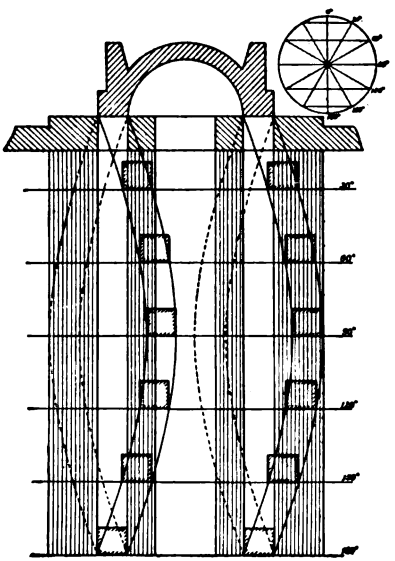

FIG. 133.

of the piston from one dead-centre to the other, and at points of convenient subdivision of this line the distance of the valve

from its central position be laid off at right angles to the line and upon the same scale, the curve drawn through the extremities of the lines which represent the motion of the valve will be called a motion-curve, and was early suggested by Uhland. If, instead of developing the motion for a stroke and back again, the curve be made a continuous one, it becomes an ellipsoid. Both offer advantages for graphical use. If, instead of one line representing the piston-stroke, six lines be

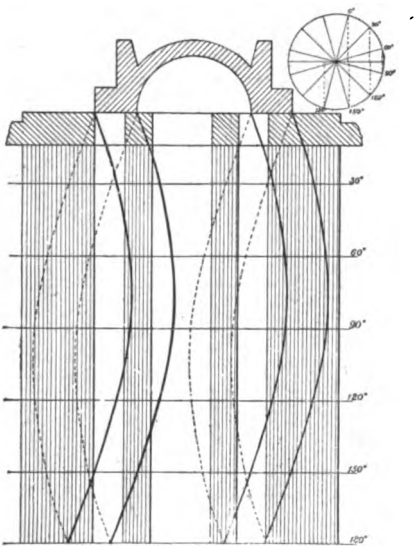

FIG. 134.

drawn perpendicularly through the four edges of the steam-port and the two edges of the exhaust-port, as in Fig. 133, and the valve-section be sketched in its central position, it will be easily possible to describe by points the four motion-curves for the effective edges of the valve which will give the curved lines shown in Fig. 133. The distances which the valve moves from its central position for each horizontal division of the vertical line are taken from a circle whose radius is the throw of the valve corresponding to the same angular position of the valve-crank as is given for the piston of the engine by the horizontal lines. Such a motion-curve gives the points

of cut-off, exhaust-closure, release, and admission for easy study. By varying the amount of lap in the assumed valve-section inside and outside, and by varying the lead, other forms of curves which are given in Figs. 134 and 135 result from such assumed conditions. It is possible also to observe

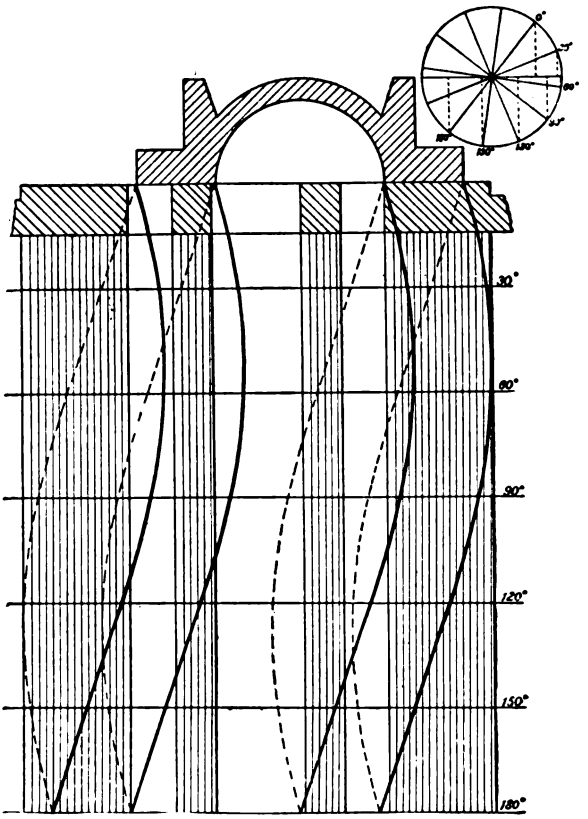

FIG. 135

the effect of increasing the throw of the valve, which is the change introduced in Fig. 136; its conditions are otherwise as in Fig. 135. The effect is to make the cut-off later when the throw is increased. These motion-curves can be experimentally drawn by the engine itself. If a board carrying a stretched paper be made to slide by attachment to the cross-

head, while the bell-crank attached to the valve-stem at one end carries a pencil at the other so that the motion of the valve is transformed into one at right angles for the pencil, the pressing of the pencil against the paper as the engine makes a stroke out and back will describe a motion-curve (Fig. 137).

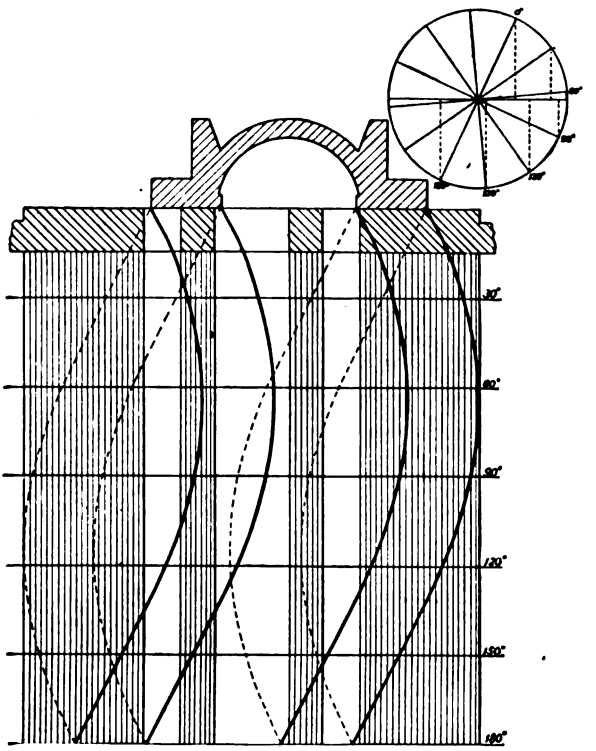

FIG. 136.

The motion-curve method, while very convenient for studying the peculiarities of valve-motions which have already been worked out and for working with cam-motions, is not applicable to the design of new valve-gears which must be worked out to meet and fill designated conditions. For this purpose the method originating with Professor Zeuner is the most usual and generally adopted, although modifications have been made by several persons.

94. The Zeuner Polar Diagram for Slide-valves.—The mathematical basis of the Zeuner diagram represents the

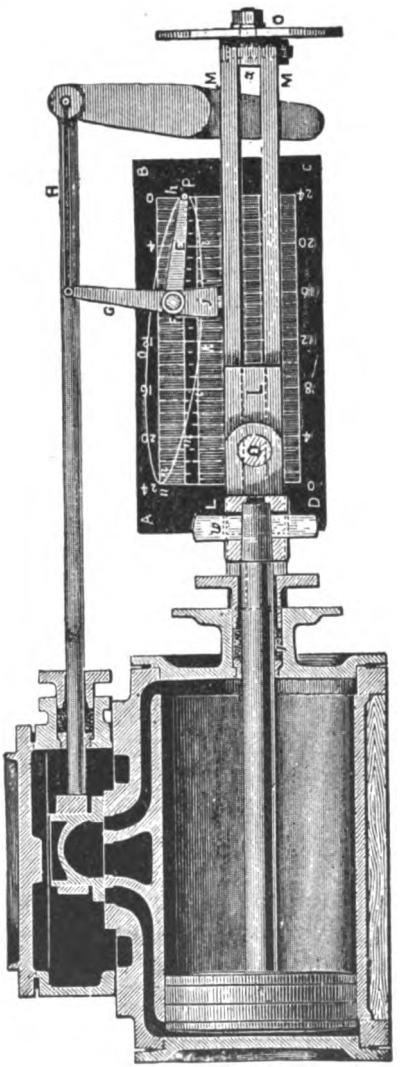

FIG. 137.

motion of the valve from its central position, corresponding to any crank-angle, by an equation involving the length of the

crank and connecting-rod which drives the valve, the length of the valve-stem, and the angles which the crank and connecting-rod make with the straight line through the centre of motion of the valve-crank. This line coincides with the seat of the valve or is parallel to it. When this equation is deduced and simplified (see the Appendix), the second step in the demonstration shows that this simplified equation is a polar equation, and the distance which the valve has moved from its central position for any crank-angle is the length of a radius vector swinging around a pole on the circumference of a circle whose diameter is the radius of the valve-crank. The angle which the diameter of this polar circle makes with the line parallel with the valve-seat will be determined by the angle which the valve-crank makes with the line through the dead-centre when the valve is at its extreme point of throw; in which case the radius-vector becomes equal to the diameter. If there is neither lap nor lead nor cut-off, and the condition is that of Fig. 133, the radius vector should be zero at the dead-centre and should have its maximum value at 90° (see motion-curve, Fig. 133) as in Fig. 138. If the valve has

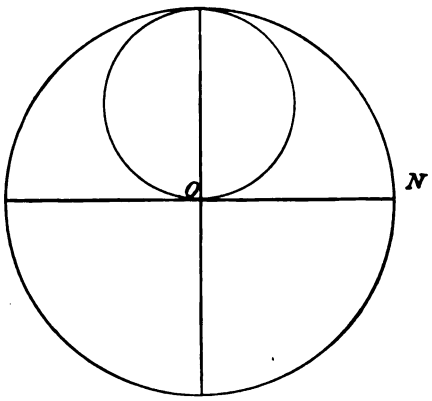

FIG. 138.

a lap, then, at the dead-centre of the piston, the valve should be distant from its central position a distance equal to such lap, and the radius vector for a horizontal engine, which has

been assumed in all this discussion, should have a value equal to this lap. This compels the polar circle to occupy a position at dead-centre such as represented in Fig. 139. *OX* repre-

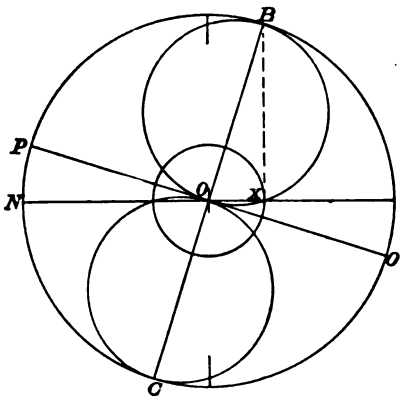

FIG. 139.

sents the lap, if the figure is drawn full size. If the engine has lead as well as lap, the valve must be distant from its central position a distance equal to the sum of the lap and the lead. The radius vector at the dead-centre must then have a value represented by *Oy* when *xy* is the lead (Fig. 140).

In these illustrations the engine-crank is to be assumed as belonging to a horizontal engine on its inner dead-centre, and the rotation to be opposite in direction to that of the hands of a clock. The maximum throw is reached when the crank of the engine is in the position *OB*, and beyond this angle the valve starts to come back and close the admission. The closure of admission will occur when the valve on its return towards its central position is distant from it a length equal to the lap (pars. 85 and 86); hence if with *O* as a centre and with *Ox* as a radius a circle be drawn, it will intersect the circle whose diameter *OB* equals the throw, and which is called the valve-circle, at points which will indicate the angles at which the valve begins to open and at which it closes. The radius drawn through *Z* (Fig. 140) gives the crank-angle at which the inlet-valve opens, and a radius drawn through *W* gives the

crank-angle at which admission ceases or the cut-off takes place. It is obvious that in a valve with lead the valve would open before the piston reaches its dead-centre.

A strict adherence to the Zeuner method would have the circle described on *OB* conceived as attached to the engine-shaft, and the crank when at its dead-centre to lie in the position *ON*. It is so much easier to cause the radius to swing through equal angles in the contrary direction, while the valve-circle remains fixed, that this method is preferred for practical use.

If the diameter *BO* be produced beyond *O* to *C*, and a second circle of equal diameter be drawn upon *OC* as such diameter, a circle is given whose radius vectors give the

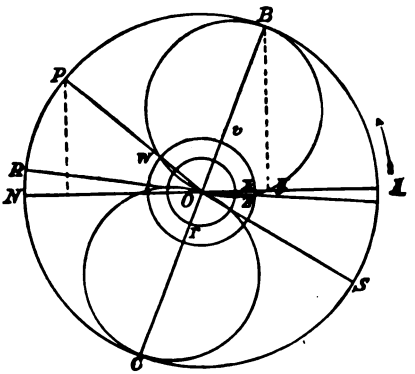

FIG. 140.

exhaust events. If there is no inside lap, the exhaust opens and shuts when the radius vector of this second circle is zero, which is the position when the crank is at *OP* and *OQ* (Fig. 143) If there is an inside lap, the port will not open until the valve has moved through that lap. Hence the effective opening will begin only when the radius vector for the secondary circle exceeds the lap. Therefore if with *O* as a centre and inside lap *Or* as a radius a circle be drawn, its intersections with the secondary circle will give the crank-angle at which the exhaust on the working stroke and compression on the exhaust-stroke begin.

95. Use of the Zeuner Polar Diagram.—The Zeuner polar diagram not only gives all information which is given by the motion-curve, but it furthermore enables the user to design the valve and seat to fulfil specified conditions. In Fig. 140 the throw lap and lead are the given data. The angle AOB shows the advance of the eccentric disk beyond 90° proper for such lap and lead, and the cut-off takes place at an angle AOP from the beginning of the stroke at dead-centre. The design of a valve and its seat proper for the conditions assumed will give a drawing such as Fig. 141.

It is desirable that the valve in sliding upon its seat should come to the edge of it in its extreme throw, in order that the wear of the valve and seat may be uniform all over their

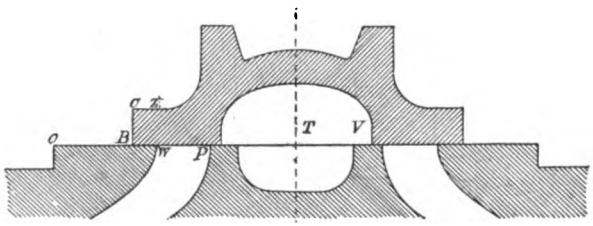

FIG. 141.

surfaces of contact. Starting, therefore, at the point O, which marks the extreme edge of the seat, a distance OB is laid off equal to the throw OB (Fig. 140), which is the radius of the valve-crank, and the maximum distance it can throw from its central position. The point B will be the beginning of the valve, since it projects over the port a distance Ox equal to BW and equal to the lap, and consequently at the point Z in Fig. 141 the outer edge of the port should begin. With the assumed throw of the valve and the assumed lap the port can never be opened wider than the distance vB in Fig. 140. Hence the indicated size for the port WP, Fig. 141, is the length vB in Fig. 140. If the port were made larger, the throw chosen would not open it wide, since BP equals OB; and if WP were less than vB, the valve in sliding would go beyond the point P, which is unnecessary. The calculation

or design must be checked at this point to ascertain whether the area of the port-opening given by the product of *WP* multiplied by the permissible length in the direction perpendicular to *WP* gives an area sufficient or unnecessarily large to admit the quantity of steam required in the cylinder per stroke according to the calculation made in par. 81.

A valve having no inside lap will have the inner edge of its working face which is the beginning of the exhaust-hollow line and line with the edge *W* of the port. If there is an inside lap, represented by *Ov* in Fig. 140, it will give a projection of the valve-face beyond the port-edge *P*.

The steam-port must be separated from the exhaust-port by a partition. The amount of metal in this partition is immaterial provided only it is enough to secure stiffness. It is often one half the port width *PW* or *vB*, when there is no reason for making it anything else. The only effect of metal in this bridge or partition is to lengthen the valve and increase the power required to slide it on its seat (par. 81).

The inner edge of the exhaust-hollow travels to the right or left a distance equal to *OB*, or the throw of the valve. It is desirable that when it is moved all the way to the right the hollow face shall still leave between its edge and the point or line *V* a space *TV*, equal to or larger than the port *PW*, discharging into that hollow from the right-hand port. That is, the motion of the valve to *T* should not constrict or reduce the passage through which the exhaust is escaping any further than it is necessarily reduced by the fixed opening corresponding to *PW*. This fixes the right-hand edge of the exhaust-port in the seat, and the rest of the valve and seat is made symmetrical with the left hand half already constructed.

96. Valve-gear Problems and Design.—It is outside of the present purpose to follow the use of the Zeuner valve-diagram further. It can be made to solve problems covering all quantities when a few assumptions or data are made or given. The point of cut-off is one of the most usual data, as the engineer in most cases desires to work his steam with a certain expansion. The lead is another fundamental assump-

tion. But a variety of combinations is possible involving the throw of the valve, the port-opening for a certain position of the crank, the release and the compression; and for these the student is referred to special treatises.

For the immediate purpose in hand, however, the special problem will be considered in which the throw, point of cut-off, and lead are given and it is required to find the angular advance and lap to fill the condition assumed.

In Fig. 142 let the horizontal line AB represent the

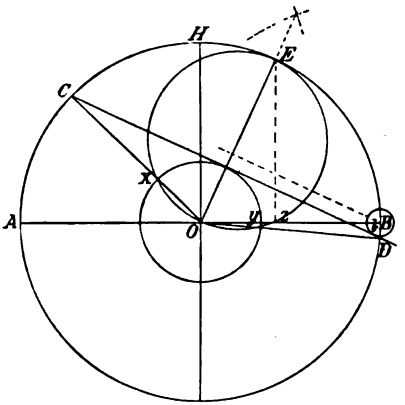

FIG. 142.

whole travel of the valve in a horizontal engine. Bisect the line at O and with OA as radius describe a circle on AB as diameter. Draw the radius OC, representing the angle from B as dead-centre at which it is proposed to have the cut-off take place. This is the point of closure of the valve; and since there is to be a lead, the valve should open before the crank reaches the position OB. The amount of angular motion before the crank reaches OB should be that through which the centre of the crank should move in subtending an angle measured by that lead. If, therefore, with B as a centre and the radius Bl, equal to the assumed lead, a circle be drawn, the radius OD will give the position at which the valve-crank stands when the port just begins to open. The maximum radius vector will be at a point half-way between these

two crank-positions *OD* and *OC*, so that if the angle *DOC* is bisected by any of the usual geometric methods and the position *OE* thus determined, the angle *HOE* will be the angular advance ahead of 90° at which the valve-crank should stand. The length *OX* cut off from the line *OC* by the valve-circle just drawn is the value of the radius vector, or distance of the valve from its central position, when the steam-edge coming back over the port cuts off admission. *OX* is therefore the value of the lap, and a circle drawn with *O* as centre and *OX* as radius will be the lap-circle for that diagram. It is a matter of simple geometric proof to show by similar triangles that the length *yz*, which represents the lead in its customary position, is the same as the length *Bl* used as an expedient in construction.

97. Limitations of the Single Slide-valve.—The cheapness, convenience, simplicity, and permanency of the single slide-valve are the great inducements to its use. It can be shown, however, by the method pursued in par. 96 that the limit of expansive working with a single valve performing all

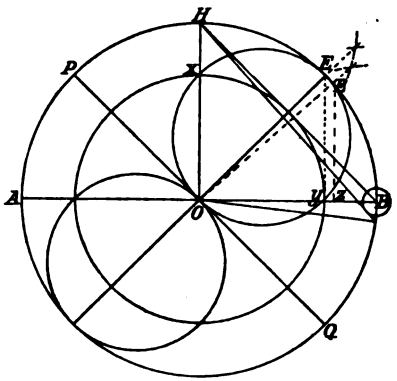

FIG. 143.

functions is reached before it is demanded to cut off at half-stroke. If the conditions of cut-off at half-stroke be imposed and the method of par. 96 be followed, it must be apparent from Fig. 143 that the angle *HOE* will be a little greater than 45° if there is a lead, and will be 45° if there is

none. The drawing of the circle of the lap with a radius OX determined by that valve-circle will give a lap so large in relation to the throw OH that the port-opening becomes absurdly small.

The matter is not materially helped by increasing the throw, because the lap increases with the throw.

Furthermore, if there is no inside lap, the exhaust-opening and closure will take place at angles represented by the lines OP and OQ, which, it will be seen, are 45° from the crank-position which belongs to the ends of the stroke. The exhaust events have thus become distorted so that successful working becomes impossible. Hence with high expansion, secured by the expedient of increasing the angular advance of the valve-crank, the limit is certainly reached before two expansions are secured. A much higher degree of expansion is desired in all fly-wheel engines. How shall it be secured?

98. Valve-gear for High Degrees of Expansion. Two-valve Systems.—The advantages of the single valve induce an effort to make use of it if possible. Particularly in such mechanisms as that of the locomotive and the marine engine, where complication is to be avoided, it is desirable to retain the single slide.

(1) The first method is to design the engine or its gear so that, as it is desired to cut off earlier, the throw of the valve should be lessened. It will be apparent that if the throw were equal to the lap or less than it, the valve would not move from its central position far enough to uncover either port. This makes the cut-off before the stroke begins, and is the limit. If a port of extra width or length will give area sufficient to let steam through in sufficient quantities to give the engine the necessary power, the admission will stop earlier and earlier as the throw diminishes, but, the angular advance remaining constant, the exhaust-ports open and close at the required angle for which they were designed. This principle underlies many designs of automatic cut-off engines, in which the governor varies the throw of the valve as the

speed varies. It is also one of the underlying features of the link-motion used as a cut-off gear on locomotives.

(2) The second method to secure high expansion is to use two slide-valves. These may work in the same valve-chest or in different valve-chests. When the two valves work in the same valve-chest it is usual to have them operated by separate eccentrics, and to divide the functions of distribution between them. The valve nearest the seat will control the exhaust-port openings entirely, and will be driven by an eccentric having a comparatively small angular advance. This principal valve will be called the main, or distribution, valve.

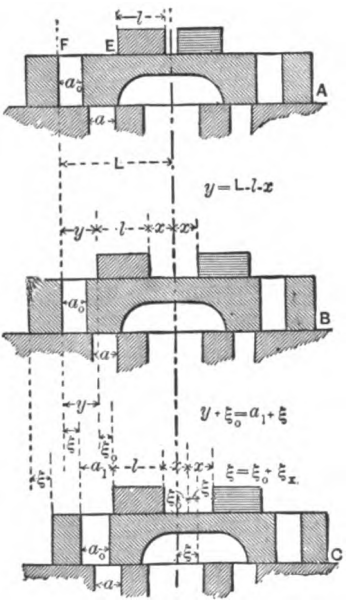

FIG. 144.

The second valve will be driven by its own eccentric, set at a considerable angular advance, and will have no exhaust functions. Its business will be solely to cut off admission of steam into the ports or passages through the main valve whereby steam is admitted to the ports in the seat (Fig. 144). This valve will be called the cut-off valve, and from the fact

that it slides or rides in the back of the main valve this arrangement is often called the riding cut-off. The main valve requires to be prolonged so as to form the seat and port for the cut-off valve. The inner edge of this port performs cut-off functions late in the stroke, and prevents the cut-off valve from opening by its return motion the port which its greater angular advance has caused it to close. This riding cut-off arrangement lends itself easily to automatic adjustment of cut-off, since the release and compression are provided for at fixed points by the lower or main valve, and admission can be varied within very wide limits without affecting these exhaust functions. It may be a solid block, or in two separate blocks adjustable on their rod, as in the type of Meyer valve selected in Fig. 144.

A modification of this system has a partition between the two valves, with one or two rectangular openings in it (Fig.

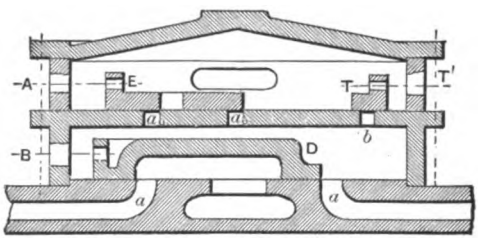

FIG. 145.

145). Steam from the boiler passes to the main valve below the partition when the cut-off valve uncovers the opening. The objection to this arrangement is that the steam which surrounds the main valve partakes of the expansion after the admission is cut off by the upper valve, and the work of such expanding steam is lost. In the riding cut-off to diminish this loss as far as possible, the thickness or height of the main valve is kept as small as consistent with giving the exhaust-hollow the depth which it requires. The small port *b* is a hand opening, or by-pass, to let steam enter the main valve-chest if the engine shall have stopped with the upper port closed.

When two valves are used in separate chests, the exhaust functions belong to one and the steam functions to the other. This makes both design and variation of cut-off exceedingly simple. Fig. 146, showing a section of the Porter-Allen

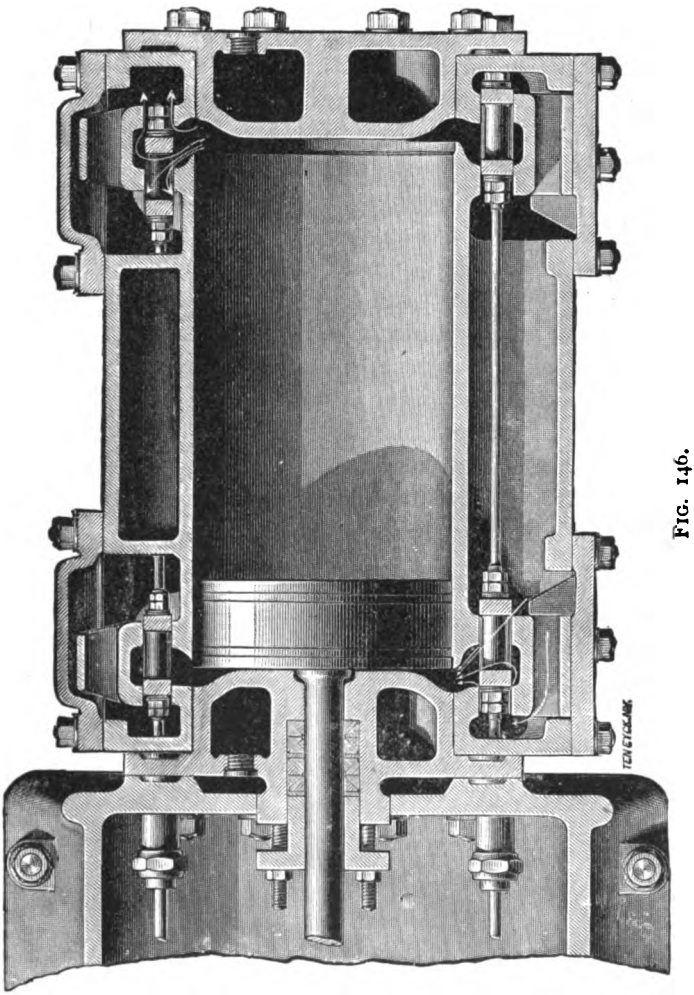

FIG. 146.

engine, presents the features of a valve-gear of this sort in which the two valve-chests are on opposite sides of the cylinder and both are slide-valves. It will be easily seen

from pars. 94 to 96 that the steam-valve need be planned only for lead, lap, and throw, and the exhaust-valve for throw and lap, when compression and release are fixed.

99. Three- and Four-valve Gears.—When the principle of one valve has been abandoned it becomes very simple to design valve-gearing with a steam-valve for each end and an exhaust-valve for both ends, making a three-valve engine, or a separate valve for steam and exhaust at each end, making the four-valve engine. In both the three- and the four-valve engine the same advantages are derived, having the compression and release occur at fixed points in the stroke, while the cut-off and expansion can be varied automatically or by hand without interfering with the exhaust functions. The forms taken by the three- and four-valve systems present almost every combination of lifting- and sliding-valves which can be made. The typical river-boat engine, the older blowing-engines, and the older beam-pumping engines illustrate types of lifting-valves, and the Corliss engine and its imitators illustrate the cylindrical sliding-valve to accomplish these same results. Before examining these mechanisms in detail it is desirable to discuss some special features.

CHAPTER IX.

VALVE-GEARING, CONTINUED.

100. Shortening Steam-passages.—In the typical slide-valve which has been discussed hitherto the valve has been considered as short as consistent with adequate area for ports and for the exhaust-hollow. This results in engines of long stroke in a considerable length from the port at the valve-seat to the end of the cylinder. As a rule in this design the valve is in the middle of the length of the cylinder, although this is not necessary if it be more convenient to have one passage longer than the other. The objections to the long passages from the valve-seat are:

1. The friction which they oppose to the passage of the steam. These passages are usually moulded in the cylinder-casting by means of cores of proper shape, and their surfaces will be rough. The effect of this friction is to increase the difference of pressure which exists in the boiler or valve-chest and in the cylinder.

2. The long passage cools the steam by contact with its sides. This cooling is first by ordinary radiation, but more important than this is the cooling which follows when the passage is in communication with the exhaust-port. The lower-pressure steam, carrying perhaps a mist of watery particles, will absorb heat very rapidly during that part of the stroke in which it is serving as an exhaust-passage. The longer the surface the more heat will be required from the entering steam on the next stroke to heat the metal up to the temperature of the entering steam.

As has been heretofore observed, there is no difficulty in lengthening the valve and thereby shortening the passage.

The size of the exhaust-hollow and the bridges which separate the ports produce no effect upon the distribution. The only objection is that increased length of valve gives an increased area for pressure, and consequently makes the valve demand more power to move it. In early designs for low-pressure steam, where this matter was of little moment, engines with very long slide-valves will be found. They have been sometimes called Murdoch's valves. With high-pressure steam the difficulty has been met in another way. When the single eccentric is to drive a valve performing all valve-functions the usual plan is presented in Fig. 147. It will be observed that

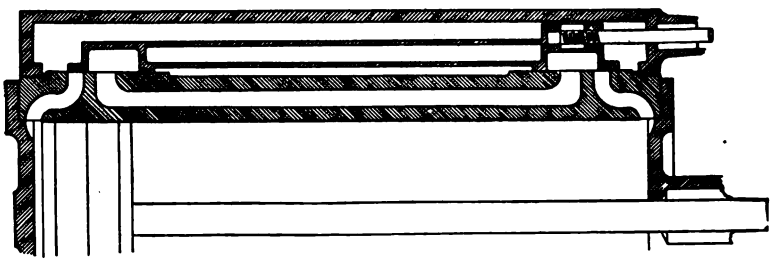

FIG. 147.

while the valve acts as one it is really made in two parts, or like a B valve. The exhaust-port is divided by its special bridge, and the admission of steam is controlled by the left-hand edge of the left half of the valve and by the right edge of the right-hand half. The length of passage is thrown into the exhaust, where it makes no difference, and the length of the steam-port at each end is reduced to the shortest possible line. By joining the two halves by a rod surrounded by the steam in the chest there is no pressure on the valve between the active parts at each end. This same result is sometimes attained by making the valve resemble a low and broad letter H in plan. The uprights of the H are the working-parts of the valve, and the cross-bar between is made hollow and fits the exhaust-port, whose length is at right angles to the length of the steam-ports (Fig. 148).

101. Shortening the Throw of the Valve. Allen Valve. —Another expedient for diminishing the power absorbed by an engine in working its own valves has been to shorten the throw or travel of the valve upon its seat. This must be done without constricting the port-area, which is an essential

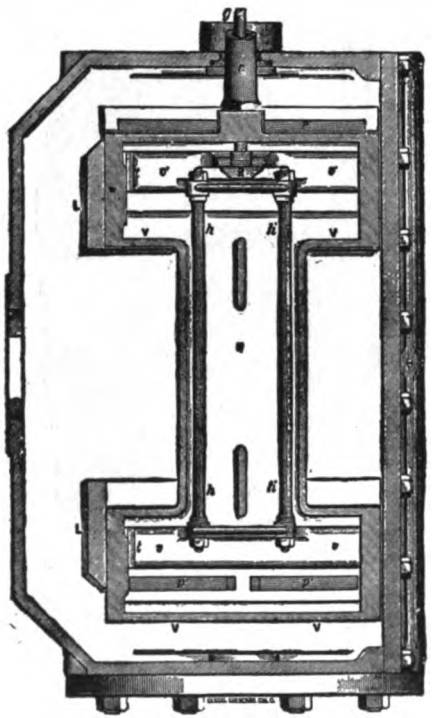

FIG. 148.

condition. If by keeping the throw of the eccentric larger than the throw of the valve, there is yet opened an equal port-area with such reduced throw, there has been given to the eccentric a mechanical advantage to overcome the pressure which holds the valve at its seat. Fig. 149 shows the Allen slide-valve whose characteristic is the passage or hollow through the shell over the exhaust-port, and the use of a comparatively short seat or a seat with more than three ports in it. From the construction and the proportions it will be seen

that when the steam-edge of the valve uncovers the left-hand port by a motion of the valve from its central position the hollow in the shell is by that same motion brought into communication with the steam-pressure at the other end of the valve. In consequence of this a given motion opens twice as

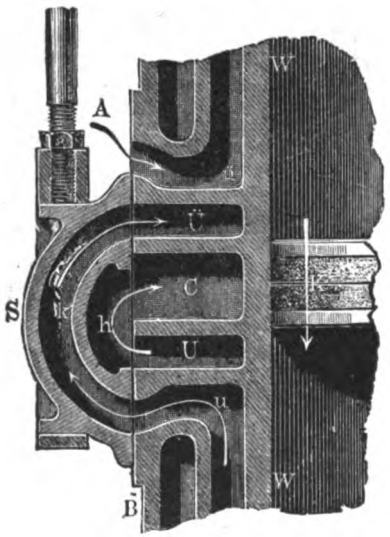

FIG. 149.

much port for the passage of steam into the cylinder as would be the case in the ordinary valve. Steam-pressure is thus very rapidly established as the valve moves a less distance than the port width which it is made to serve.

102. Gridiron Slide-valve.—It will be immediately apparent that if the slide-valve be constructed with alternate holes and solid bars each of one inch in width which match similar holes and bars in the seat, that the motion of one inch which brings the holes in the valve to match the holes in the seat will open an area of port as many times one inch in the direction of motion as there are holes in either valve or seat. Fig. 160 shows a slide-valve of this construction, intended for steam only. It is called from its resemblance a gridiron slide-valve, and the principle of having many openings into

the steam-passage gives it also the name of multiported valve. The adoption of this principle will be observed in many large engines, and is particularly useful for high pressures.

The multiported valve-seat can also be made to serve another purpose, which will be understood from Fig. 161.

FIG. 160.

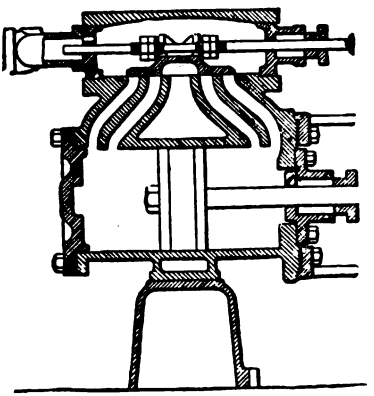

FIG. 161.

The division in the port is carried all the way down to the bore, so that the piston in its movement towards the head of the cylinder closes the inner port at either side before it reaches the end of the stroke. This inner port has been the principal dependence as an exhaust-port, so that when it is closed by the piston a very energetic compression is the result, and the piston is arrested by a cushion of the exhaust-steam. On the steam end the admission is gradually cut off by the closure first of one port and then of the other. This principle of using the piston as a valve to close ports in the bore of the cylinder is the principle underlying several designs of so-called valveless engines. A modification of it is to be noted in Fig. 65.

103. Balancing Slide-valves. Piston-valves.—The power necessary to slide a valve upon its seat is measured by the area of the valve multiplied by the pressure upon that area,

and by a factor expressing the coefficient of friction between the valve and its seat. The pressure is the net pressure, or the algebraic sum of the downward pressure on the valve and the upward pressure exerted from the cylinder against the under side of the valve. It is not a difficult matter to make this calculation for assumed conditions (see Appendix). The work in foot-pounds per minute to slide the valve upon its seat will be the product of the previous factors multiplied by the feet per minute through which this resistance to motion is overcome. It will be seen that the previous discussions have shown how these pressures may be kept as small as possible and how the motion or travel can be diminished. With high pressures and large volumes of cylinders to be filled steps must be taken to diminish pressure on the valve, since the feet of travel must remain always a considerable quantity. The most satisfactory method for accomplishing this result gives rise to what are called balanced valves.

The simplest form of balance-valve is what is called the piston-valve, which is shown in the section of the valve and chest in Fig. 162. The piston-valve consists of an ordinary shell or D valve, which has been made to revolve around its valve-stem as a centre so as to generate a volume of revolution. The plane faces of the typical slide-valve become the surfaces of a cylinder, and the plane valve-seat must become a hollow cylinder which the valve-faces fit like a piston. By referring to Fig. 162, it will be apparent that steam-pressure is equalized upon the two end-faces of the cylindrical valve, and the contact of the valve with its bore prevents any pressure other than friction from getting at the valve sidewise. The only resistance to the motion of such a valve is its own friction, no matter how great the steam-pressure may be. The valve may be arranged with double pistons as in Fig. 162, or with single pistons as in Fig. 163. The objections to the piston-valve are the difficulties from leakage and wear. The pistons cannot fit tight in their bore, because unequal expansion would cause them to be seized by the bore when the latter was cold and the pistons were hot. To prevent

excessive leakage they must therefore be made steam-tight, by means of spring-rings whose elasticity causes them to spring out against the bore while they fit grooves in the piston tightly enough to prevent leakage around them. These spring-rings must be prevented from catching in the ports over which they slide by bridges of metal which prevent their enlargement when the rings are opposite the ports.

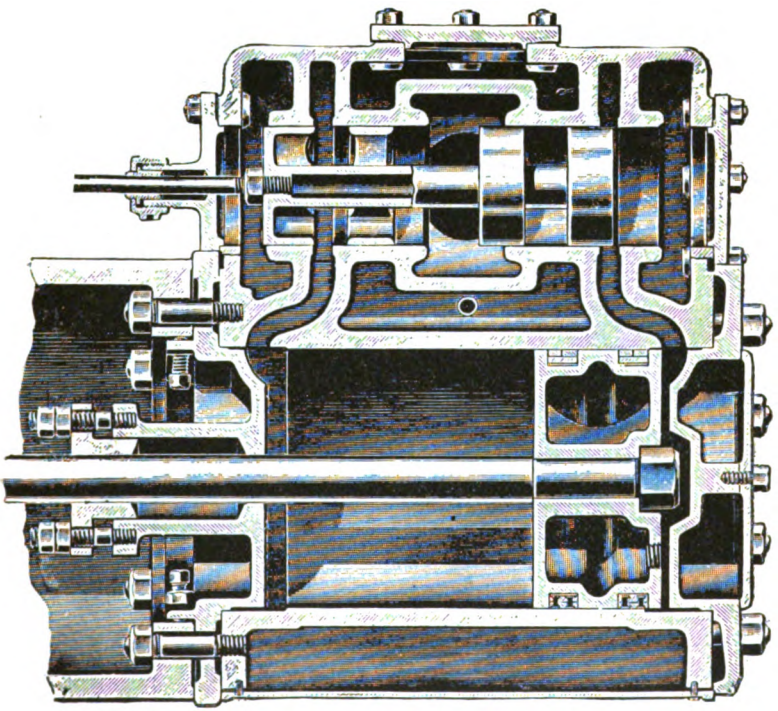

FIG. 162.

These rings, nowever, cause friction and wear. When the piston-valve is used without rings great care must be taken to prevent the possibility of difference of temperature between the piston and its bore. Unequal expansion would cause the piston to be cramped by the bore, and this must be prevented by jacketing the latter with extreme care. Fig. 162 shows this precaution taken. The piston-valve precludes great re-

duction of the clearances and the shortening of the passages. For very large marine engines, in order to diminish the diameter of the valves and at the same time to shorten certain connections, two sets of piston-valves are used, working together from a common valve-rod. The piston-valve is extensively used on steam-hammers, rock-drills, and the like. Its great advantage for steam-hammer practice in large sizes comes from the ease with which the valve can be worked by

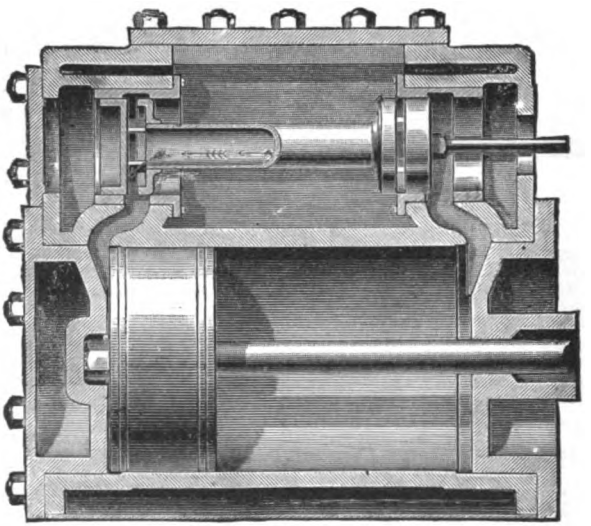

FIG. 163.

hand. A favorite form for such piston-valves is rectangular or square instead of round. Round pistons are easier to make and to pack.

104. Pressure-plate Systems.—The pressure-plate system aims to secure the release of the valve from unbalanced steam-pressure by receiving that pressure on a plate which is supported positively in the steam-chest and underneath which the valve shall slide. The principle is fundamentally the same as the piston-valve; but the valve can be flat, and need only be steam-tight on its top and bottom, where it touches the seat and pressure-plates, respectively.

There are three great systems of arranging the pressure-plate principle. First, the fixed plate, non-adjustable. In this design the fixed plate rests upon lugs or ledges in the sides of the steam-chest, or on its bottom, the length of the plate being such that the valve will always remain under it as it travels (Fig. 159); or the plate may be the top of the steam-chest. The valve may have no packing provision as in Fig. 159, or an adjustment may be provided as follows: To

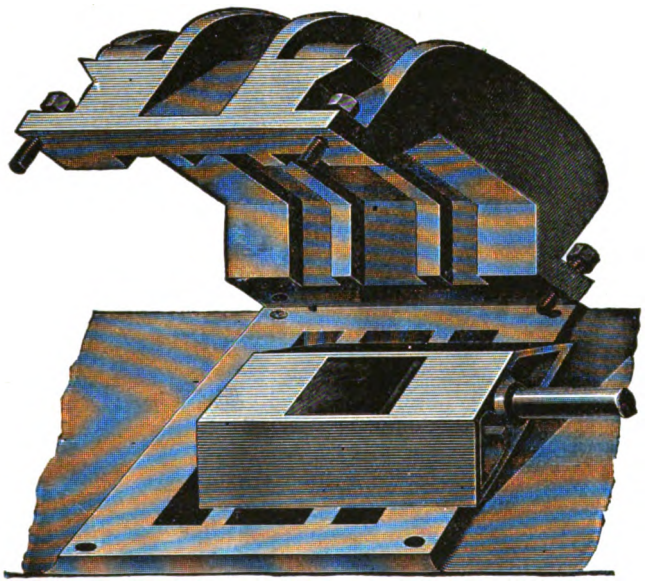

FIG. 159.

the back or top of the valve is fitted a spring-ring or an equivalent device, which fits the valve and the plate in such a way that no steam can reach the top of the valve by reason of the contact continuously made between the valve and the plate through the spring-ring. It will thus be seen that the valve is in equilibrium of steam-pressures all around it except on its back, and the only resistance to its motion is the friction caused by the elasticity of the packing device. It is frequently arranged to have the space inclosed by the pack-

ing-ring communicate with the exhaust through a hole. so that if the packing-ring should leak, the leakage would be into the exhaust-pipe, and it would be impossible for pressure to get upon the valve. Fig. 164 shows the balanced valve of this fixed pressure-plate and adjustable-ring type. The design chosen for exhibition is one which has been much used in locomotive service. In Fig. 159 the pressure-plate has relief-valves on its back which can open by excess of pressure from below, due to water forced back from the cylinder through the extra length of the ports. The piston-valve and

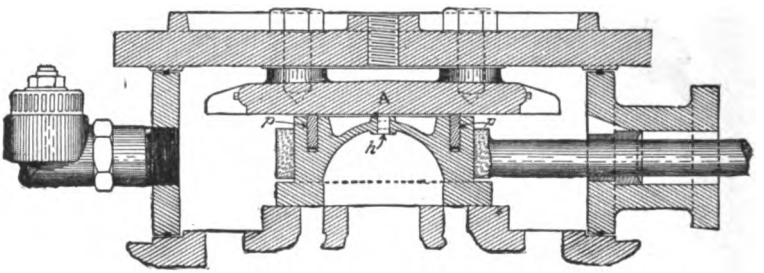

FIG. 164.

the inelastic pressure-plate do not allow this displacement of the valve by excess of upward pressure.

The second type of pressure-plate systems is shown in Fig. 165. In this design the valve is a solid block, but the pressure-plate which fits upon its back is arranged to be supported upon an inclined plane. The pressure-plate is also made to slope at the same angle, so that by means of the adjusting-screw the inclined planes are made to slide over each other; the surface which bears on the valve remains always parallel to itself. It will be apparent that any desired pressure of contact can be made between the sliding-valve and the pressure-plate while the pressure of steam is kept from the back of the valve. The type selected will also serve to illustrate another form of double-ported design for the admission of steam through large areas by small motion of the valve (see pars. 101 and 102). This same method is further illustrated

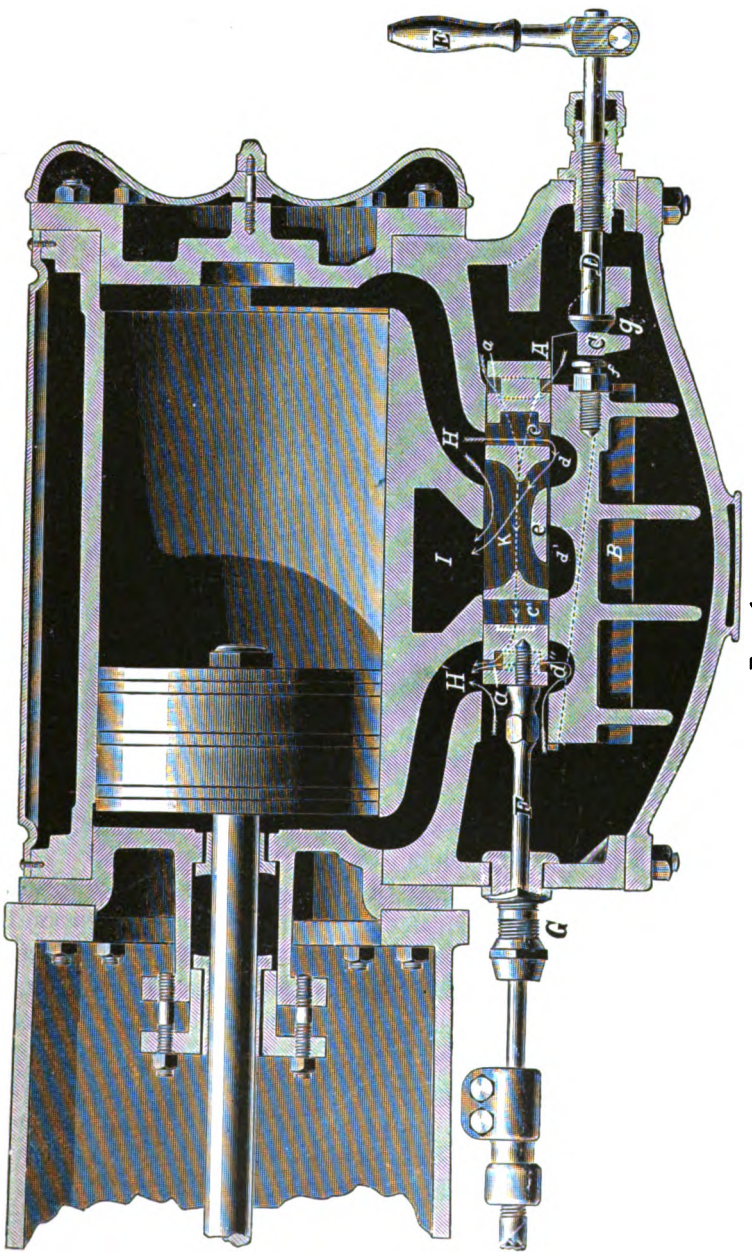

FIG. 165.

in Fig. 166, where the pressure-plate adjusts across the path of the valve by similar inclined surfaces. The same engine is shown in Fig. 146. Or, again, the pressure-plate may bear upon flat surfaces, from which it is held away by packing-

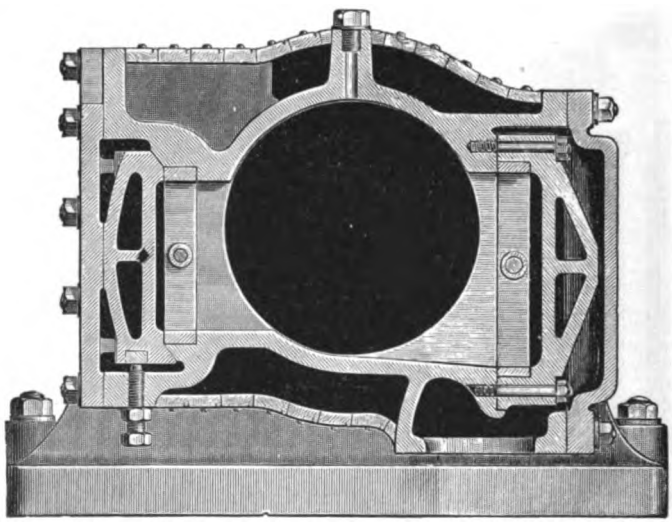

FIG. 166.

strips, which are taken away as wear may render this course necessary (Fig. 167).

The third pressure-plate system has been adopted for rougher grades of work than the two preceding. The pressure-plate is a disk or plate of steel or similar flexible and resilient metal. It is so calculated that the pressure upon it shall force it down upon the valve which slides under it, but its resistance to such flexure shall be sufficient to permit only the desired nip or squeeze to reach the valve and prevent leakage of pressure between the valve and the plate (Fig. 168). In some old designs this flexible pressure-plate was supported at its central point by a stud which came up through the top of the steam-chest, and could be adjusted from outside with steam upon the valve within.

The first two systems are the most usual.

105. Valves taking Steam Internally.—Closely resembling the piston-valve and pressure-plate modifications of it is the third type of balanced valves. In these provision is made to have the upward pressure exerted by the steam upon the area made just enough less than the area exposed to downward pressure so as not to lift the valve. The unbalanced force tends to keep the valve upon its seat. This compels the use of a hollow valve whose upper side shall either fit

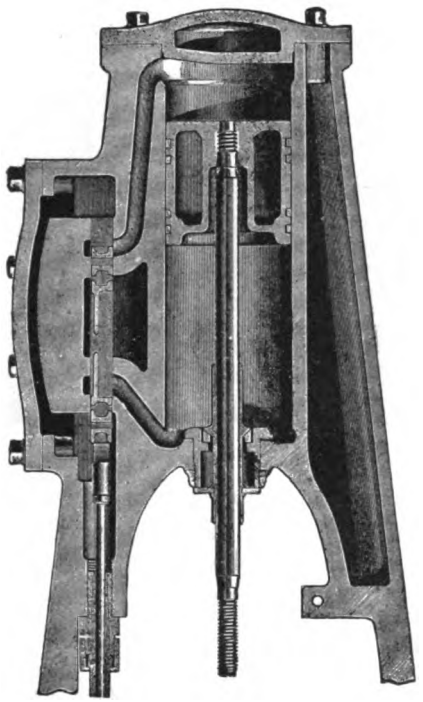

FIG. 167.

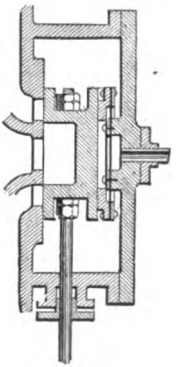

FIG. 168.

against a surface, adjustable or fixed, which shall serve to keep pressure away from the outside of the hollow valve on the side corresponding and opposite to its seat, or a scheme is used in which the pressure is balanced around it (Fig. 169). These types run naturally into the pressure-plate system with steam on the ends only.

106. Valves with Counter-pressure.—A very simple arrangement of counterbalances was applied to many Worthington pumping-engines of large size. The valve was attached

by a link and pin-joints to a piston. This piston fitted a vertical cylinder directly over the valve, the area of the piston being so calculated that it was not quite enough to lift the valve even when the latter had its maximum pressure underneath it. The cylinder needs only to be long enough to permit the swing-link to follow the valve as it moves back

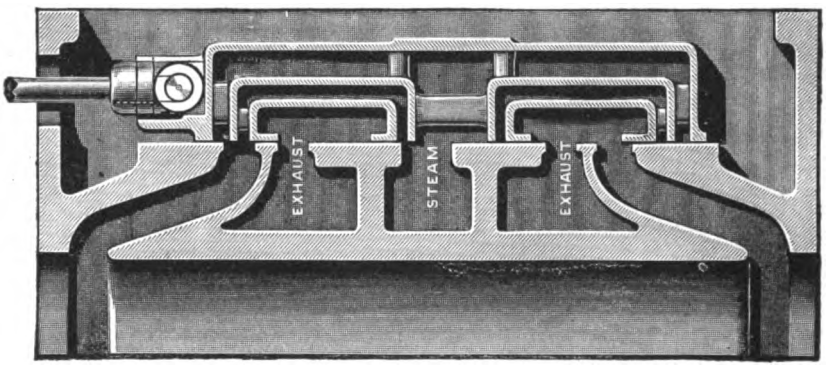

FIG. 169.

and forth. This principle of counterpoising pressure by means of a piston has also been used in massive vertical engines to provide for the weight of the valves and their rods and to keep the strain always in one direction. It can also be similarly used to counterbalance the weight of the mechanism of the engine itself.

Locomotives have been fitted with a nest of rollers which lie in a groove below the surface on each side of the valve. They come just to the level of the seat, and carry the downward pressure to a degree without allowing leakage below the valve and between it and its seat. They form a roller-bearing.

107. Poppet-valves. — It is one of the great advantages of the double-seated lifting-valves that they are nearly, if not entirely, balanced. The poppet-valve as usually constructed consists of two disks secured to one stem. These disks are usually segments of cones so as to seat steam-tight in corresponding conical holes (Fig. 170). The pressure can be brought either between the two disks so as to be downward

upon the lower disk and upward upon the upper, or the pressure may be brought outside of both disks so as to be upwards upon the lower and downwards upon the upper. It will be apparent, therefore, that valves so constructed can be made either perfectly balanced, underbalanced, or overbalanced, according to the area and the direction of the pressure. They are most frequently slightly underbalanced in river-boat engines, where they are much used, because it is convenient to construct the valve-seat of the upper valve large enough so that the lower valve will pass through it.

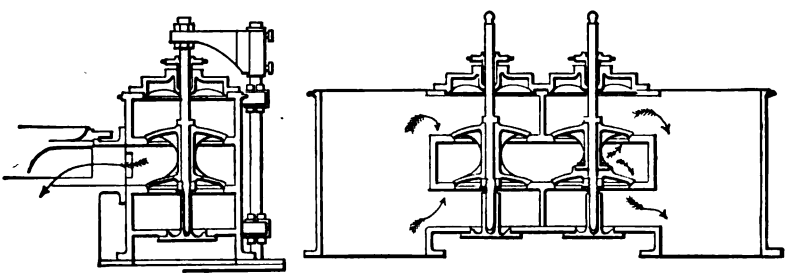

FIG. 170.

This means that the small base of the cone in the upper seat shall be just larger than the large base of the disk which closes the opening in the lower seat. Balanced lifting-valves of this class open a comparatively large area for the passage of steam, and have no friction except that of the stems which pass out of the steam-chest through the stuffing-box. It is doubtless the rise of these stems as the valve is lifted in vertical engines, like the appearances of puppets in the old-fashioned peep-show, which has given its name to this form of valve.

The objections to it, as applied to vertical engines, are the excessive clearance-volume which is entailed, and the difficulty of making them so that they will not leak. In horizontal engines, where the poppet-valves can lift at right angles to the diameter of the cylinder, the loss from clearance need not be so great (Fig. 173).

CHAPTER X.

CAM AND RELEASE VALVE-GEAR.

108. Cam Valve-gears.—The convenience of a cam as a means to operate the valve distributing steam to the engine-cylinder was early appreciated. The profile of the cam, whether revolving continuously or vibrating through an arc or a part of a circle, can be designed to give to the valve exactly the desired motions and at the desired times. It can, moreover, hold the valve open or shut while continuous motion of other elements or organs is in progress which the crank-motion does not permit; and furthermore it permits the sudden or rapid closure of the valve by gravity or by a spring when the profile of the cam lets go of the stem.

Cam-motions are of two great classes. In the first the cam-shaft revolves continuously in one direction. In the second the cam-shaft is a rock-shaft vibrating through an angle first in one direction and then in the other. In cam valve-gears of the first class there are two arrangements usual. In the first arrangement the cam bears against a roller in contact with its exterior surface; such are called outside cams (Fig. 171). The roller is conveniently mounted in the end of the valve-stem and can be in the plane of such valve-stem, or the cam may bear against the end of a pivoted lever which actuates the stem (Fig. 176). In the other arrangement the roller fits in a groove in the side of a cam-plate.

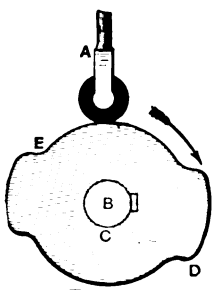

FIG. 171.

The outside cam-motion works the valve in one direction only; for the return motion either gravity or a spring must be

depended on, or else there must be a roller or yoke opposite to the first one to bring the rod back with a motion similar

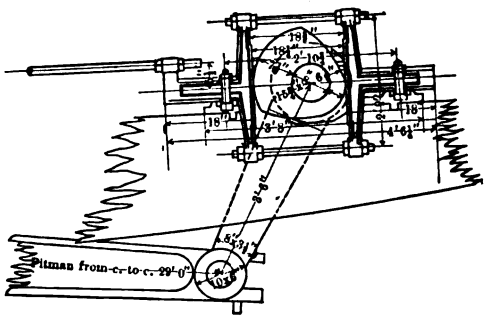

FIG. 172.

to that caused by the cam against the first roller. This outside cam arrangement has the advantage that the roller always turns in the same direction. The two-roller or yoke

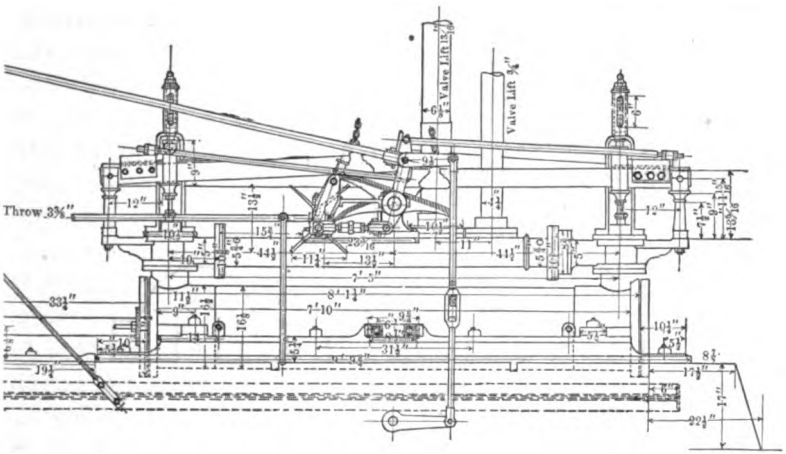

FIG. 173.

plan has a grave objection from the difficulty that wear prevents the distance between the roller or yoke surfaces remaining always the same as the net diameter of the cam at every point. If the roller or yoke does not touch the cam continuously, there is a jar and shock followed by wear at the points where such contact begins.

The side-cam arrangement where the roller fits in a groove has the entire motion of the valve effected by that one roller

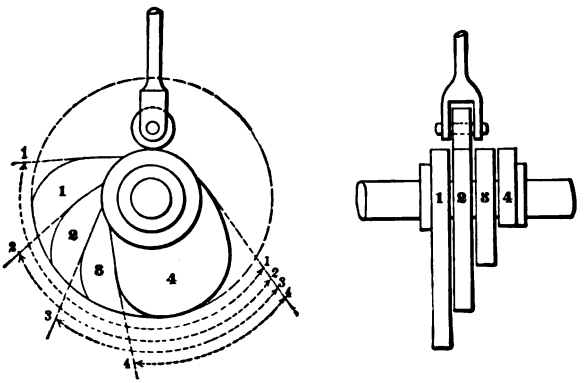

FIG. 174.

and groove. The difficulty is that the inside surface of the groove drives the roller on the lifting stroke, and the outside surface of the groove drives the roller on the reverse stroke.

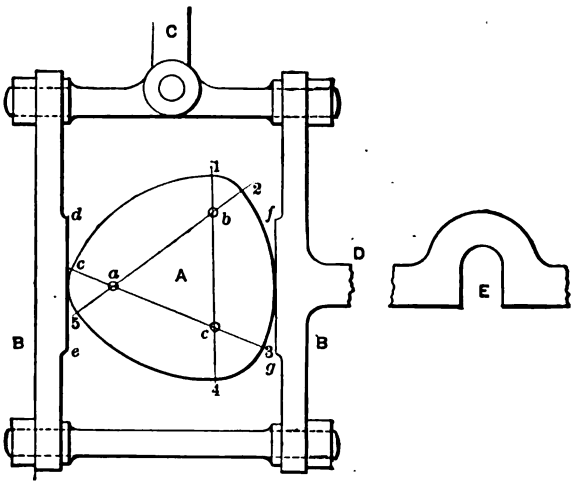

FIG. 175.

Hence at each reversal of motion the rotation of the roller must be instantly reversed, and the inertia of the roller resisting this reversal prevents perfect rolling contact at those

points of reversal, and wear and rattle ensue. The difficulties from the inertia of the rollers and the mass of the valve-rods have limited in the past the use of cams to relatively low rotative speeds. Recently a design has been brought forward in which the reverse motion of the valve-stem is caused by a pressure of air or steam upon a piston on the rod, so that the mass to be moved by the cam is reduced to its lowest terms, and the pressure on all pin-joints is kept constantly in one direction (Fig. 176).

When the cam rocks or vibrates upon an oscillating shaft instead of revolving continuously it drives in one direction only, and the weight of the rod or a spring, or both, must be used to return the valve. This rocking or oscillating cam is almost a distinctive peculiarity of the beam-engines used in deep-river-boat practice of Eastern America (Fig. 30). These are four-valve engines, the two exhaust-valves being on the right-hand side and the two steam-valves on the left, as the observer faces the engine. Eccentrics on the water-wheel shaft transmit a reciprocating motion to cranks upon a rock-shaft which crosses the front of the engine and is divided into two sections at the middle bearing. The valve-rods are lifted by the profiles of curved cams or wipers which bear against the horizontal surfaces of toes which are lifted by the rocking of the rock-shaft. The exhaust-valves must be open full stroke, and consequently the plane of the two wipers has almost a common tangent at the dead-centres, so that the cam on one side will have just closed the valve at the upper end of the cylinder when the cam on the other is to open the valve at the lower end. The steam-cams make an angle with each other, so that there will be an interval between the closing of one and the opening of the valve at the other end. This gives the interval for expansion at the end of each stroke, while securing admission at the proper point. The eccentric of the steam end of the rock-shaft is usually of greater throw than the exhaust side, so as to give greater amplitude to the motion of the cams, and the steam-cams are made longer than the exhaust-cams, in order to give gentle

curves for their action, and yet open the valves quickly and close them promptly. This valve-motion of wipers and toes

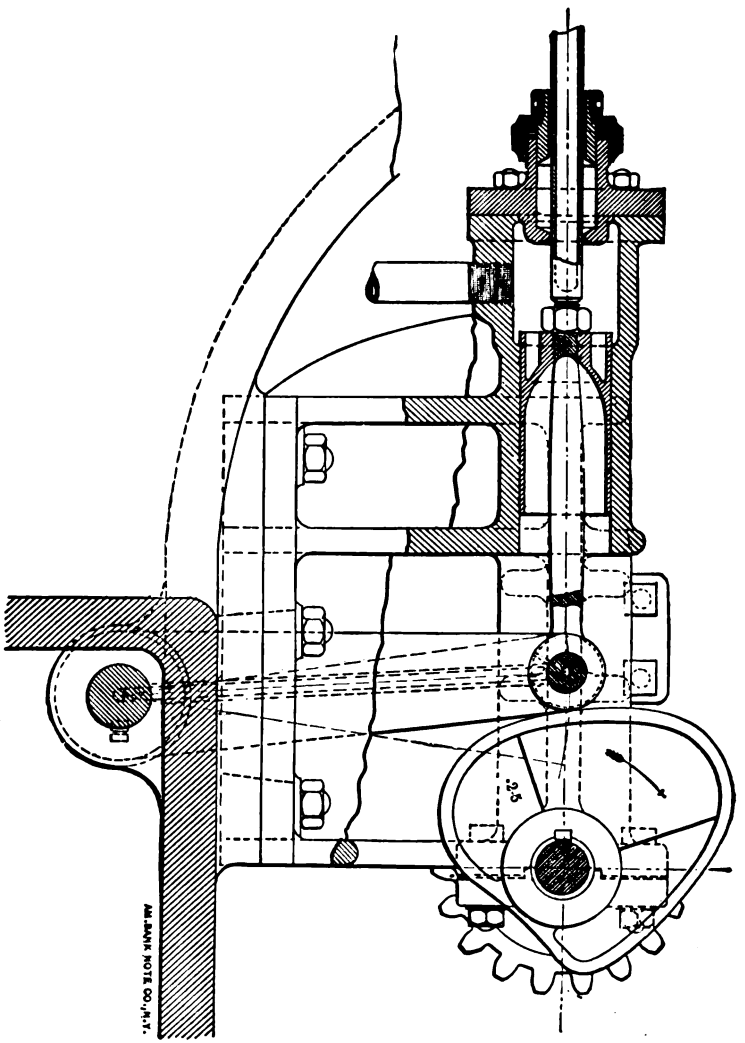

FIG. 176.

was first proposed by the Messrs. Stevens in 1848, and is usually known as the Stevens cut-off.

The rocking cam also appears in Fig. 173, for actuating

the valves of inclined cylinders by bearing against the under side of a pivoted lever to which the poppet-valve is attached.

The Western river-steamboat with horizontal engines for

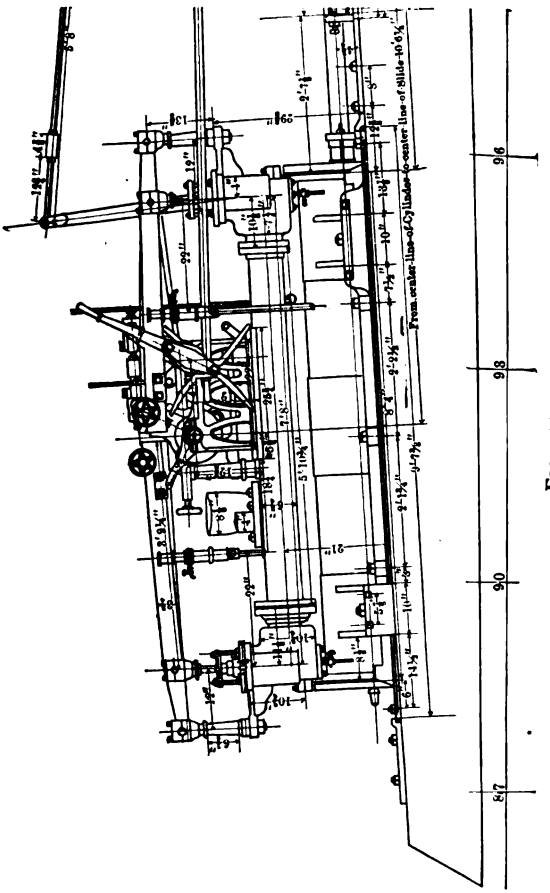

FIG. 177.

its water-wheel usually operates its valves by continuously moving cams on the water-wheel shaft, which bear against the surfaces in a frame to which the revolving rod is attached. The relatively slow motion gives rise to no difficulty with this type of gear (Fig. 172).

Cam motions can be made adjustable or variable by arranging to have the profile of the cam variable. This

is usually done by having the cam made up of several layers which are movable over each other in such a way that the acting face of the cam can be made shorter or longer at the pleasure of the operator. Or the cam is made of a varying profile at different sections of its considerable face, and different parts are brought under the roller or valve-lever (Fig. 174).

It is not often attempted in cam valve-gears to make one cam and one valve perform all the valve-functions. Cam valve-gears are usually three- or four-valve designs. The cam gear is usually worked with poppet-valves, because the valve must oppose the least resistance to motion, and must be balanced so as to be self-closing. Examples of cam valve-gear will be found in Figs. 172 and 173. Fig. 175 shows an arrangement which holds the valve open or shut through a considerable angle of the rotation of the shaft.

109. Trip or Releasing Valve-gears.—Belonging to the same general class as the cam gears are those in which a detent or catch which is pushed or pulled to open the valve is released when the valve is to be closed, so that it returns to its closed position independent of the operating mechanism. This return is effected usually by a weight or a spring or both, so that the valve is closed more quickly than it could be if the connection of the valve to the operating mechanism were positive. This principle of trip or release gears is identified in America with the name of Frederick E. Sickles (1841), but has received its greatest development under the name of Corliss (1849), with whose name it is best identified in Europe. The original Sickles cut-off was applied to poppet-valves lifted by cams. When the cam had lifted the valve-stem to the desired point, a latch connection between the stem and the lifting mechanism was released and the valve closed independently by dropping. As the lifting mechanism descended it displaced the latch or detent until it had passed the latter, when, by a spring, the latch came forward into position to be caught by the lifting mechanism when it was to make its next stroke. As applied to early engines the Sickles principle

was arranged to have the latch release adjustable by hand. It becomes easy to have this adjustment made automatically by the governor, and this easy adaptation has been a great stimulus for the development of this class of valve-gear. A type of gear which presents the trip-and-release mechanism in its simplest form is that which is identified with the Greene engine, Fig. 180. It will be seen that the slide *J* traverses

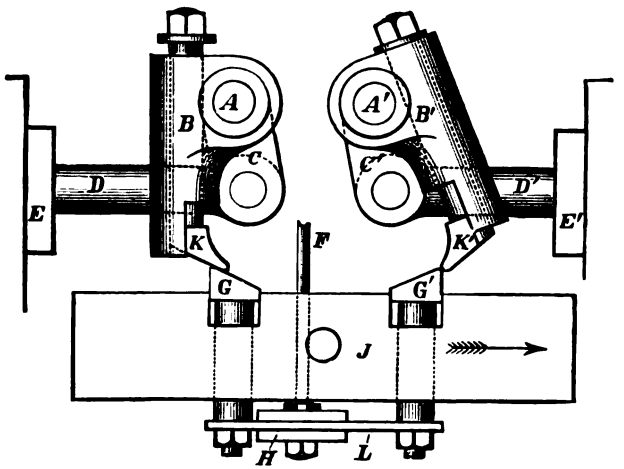

FIG. 180.

back and forth driven by an eccentric. This slide carries the latches *GG*, which are held upwards by means of springs and are inclined upon their upper faces. It will be apparent that as the sharp corner of the latch catches the end of the arm *B* it will swing it upon one stroke, but will be depressed by it on the other. As soon as it has passed by, however, the spring under the latch will force it up so that it will be ready to catch and swing the arm *B* on the next stroke. If the governor mechanism be attached to the rod *F*, it is obvious that, if it acts to depress the latches *G*, the arm *B* moves the valve-stem *D* through a less angle, and lets it go so much the sooner. The exhaust-valves of the Greene engine are operated independently underneath the cylinder, one at each end.

110. Corliss Valve-gears.—The Corliss valve is shown in principle in Fig. 181. The usual gear has four valves—two

of them for steam above the axis of the cylinder, and two for exhaust below. In the form shown they are made directly in the cylinder-heads. It is perhaps more usual to put them upon the sides, as shown in Fig. 182. The characteristic of the

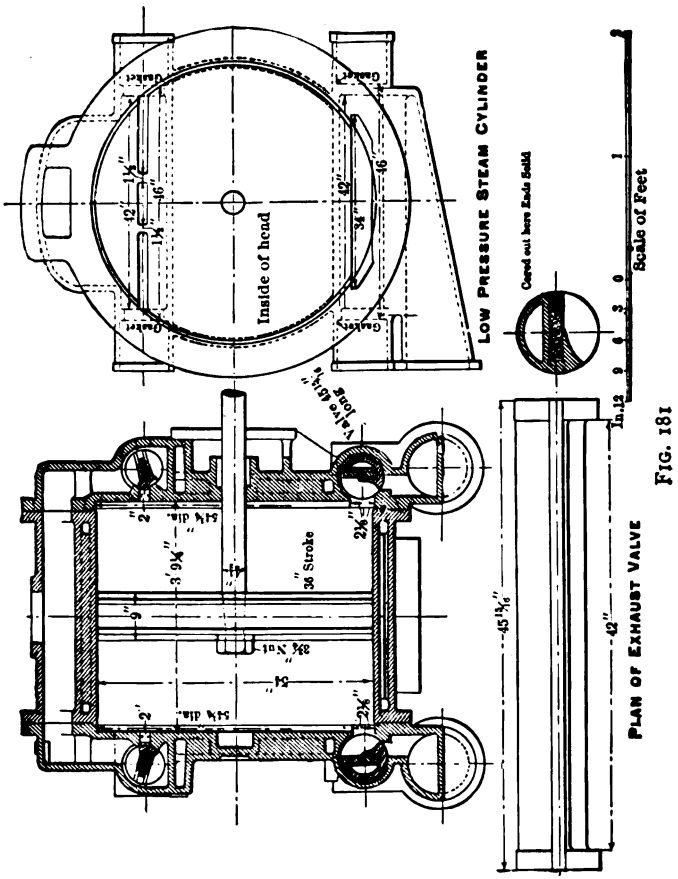

FIG. 181

valve is that the spindle by which the valve is caused to rotate is not fastened to the valve, but is independent of it. This takes away the objection to the cylindrical cock-valve. The valve need not fit tight all about its casing, but must turn when its spindle is turned from without. On the type shown it will be apparent that ports and passages are of the smallest

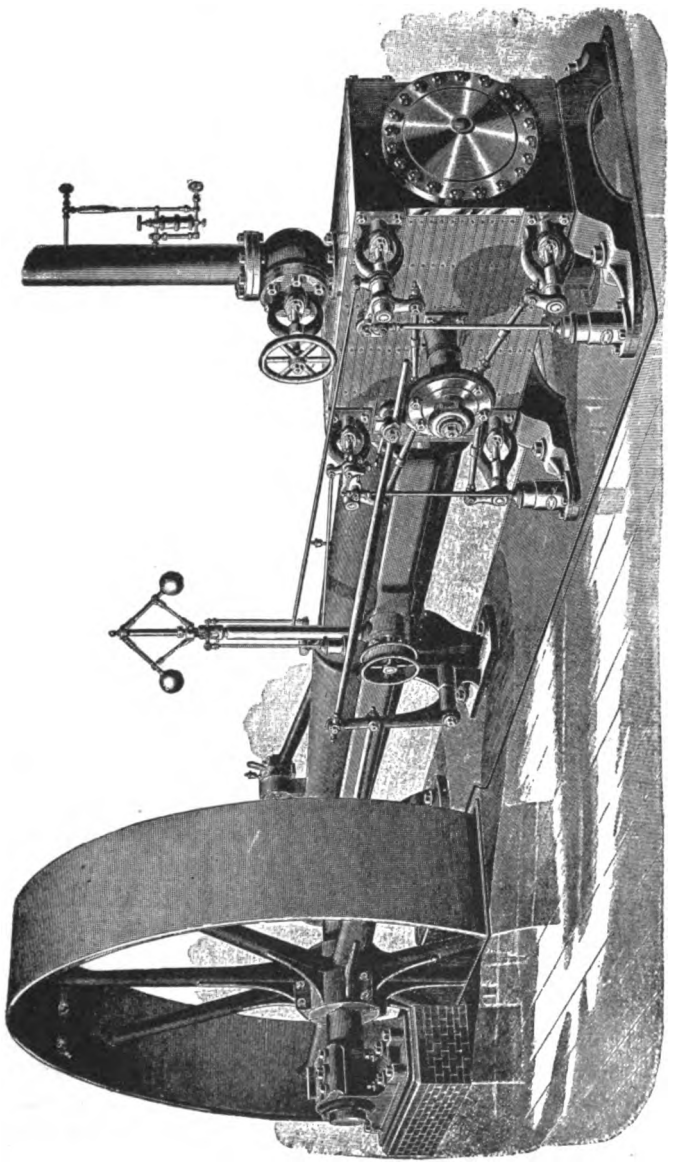

FIG. 182.

possible length and surface, thus taking advantage of the features discussed in par. 100.

The second feature of the Corliss valve-gear is the operation of the four valves from points on a wrist-plate which is made to vibrate back and forth through a considerable angle by its connection with the eccentric. The two upper valves, Fig. 182, are connected near the vertical diameter of the wrist-plate, and the two lower or exhaust-valves connected nearer to the horizontal diameter. It will be apparent from this peculiarity that the steam-valves will be opened rapidly as the engine passes its dead-points, while the exhaust-valve will be held wide open during that fraction of the angular motion of the wrist-plate during which the link of the exhaust-valve is coming up into line with the centre of the wrist-plate and is passing beyond and above that line and is returning to its original position. The other steam- and the other exhaust-valve are without effect on their openings during the stroke in which their mates are in action. The valves usually work in diagonal pairs.

The third feature of the Corliss gear is the release or trip of the steam-valve rods, by which the hold of the wrist-plate upon the valve is dropped and the valve closed suddenly by weight or spring. The peculiarities of the method followed in the detail of this release-gear differentiates many of the various Corliss engines from each other. In the very earliest forms the detent was thrown off as the valve-rod moved up an inclined plane or wedge. Another form throws a cam or eccentric into engagement with a curved arm or toe, and the pressure of these upon each other forces the rod to let go of the catch on the arm of the valve. In all of these forms the adjustment of the gear is usually made by the governor, so that the speed of the engine varies the length of admission by causing the cut-off when the trip occurs. The exhaust-valves are positively connected to the wrist-plate so that release and compression are constant, while cut-off and expansion vary according to the work of the engine.

The fourth feature of the Corliss valve-gear is the closure of the valve by a weight or a spring with dash-pots. The

dash-pot is a cylinder in which fits a piston nearly or entirely air-tight. As the valve is lifted it lifts the piston in the dash-pot. Air enters below in the weighted dash-pot, and when the valve is released the weight of the piston, with or without the help of additional weights, closes the valve, when the retarded escape of air in the dash-pot arrests the motion without excessive shock. In the vacuum dash-pot the piston fits tightly, and the lift of the piston, creating a partial vacuum below itself in the dash-pot, causes atmospheric pressure to become the weight or spring which closes the valve. The compression of the air remaining below the piston performs the cushioning necessary to prevent shock.

111. **Advantages of Trip Valve-gear.**—The advantages of the Corliss and other trip valve-gear are:

1. Quick opening of inlet-valves establishes full boiler-pressure in the cylinder early in the stroke. It is a feature of most of these gears that their construction and operation give large port-areas and little friction through the valves.

2. The inlet-valve closes quickly. The effect of this is to increase the area of the work-diagram by giving a sharp corner at the point of cut-off instead of a rounded curve. A rounded corner at this point has the effect of gradually lowering the pressure from wire-drawing as a consequence of gradual closure.

3. This type of gear, being specially adapted for engines which are designed to be regulated by varying admission, gives the advantage of making the terminal pressure low. Such engines secure this regulation, furthermore, without introducing irregularities in the exhaust functions by virtue of their being always multiple-valve engines.

4. The ease of adjustment of such independent valves if variation at the two ends of the cylinder should be desirable.

5. The small motion and the period of rest for the steam-valves after closure diminish the friction of the valve-gear and the attendant loss of power.

112. **Disadvantages of Trip Valve-gear.**—The trip valve-gear, being almost always a multiple valve-gear, is open to the following objections:

1. The complication and number of parts in most of the gears.

2. The expense of most of the engines fitted with complicated gear.

3. The limitation in rotative speed or number of revolutions imposed by the necessity of engaging the catches and valves. The inertia of the masses precludes an instantaneous action in response to the spring or weight, and the snap-and-catch action becomes noisy when the springs or similar devices have stiffness sufficient to make them positive at speeds faster than 150 revolutions per minute.

4. The trip and the cam valve-gear have this objection in common, that the release of the catch and closure of the valve must be effected by the governor during that stroke of the valve-rod which nominally opens the valve. In other words, in a lifting-valve the release must take place before the valve reaches its point of greatest opening. This limits the range of the ordinary gears of this class with respect to their ability to adjust the point of cut-off. To avoid this last difficulty is the object of certain designs of Corliss gear making use of two parallel wrist-plates (Fig. 183). They can be operated with different eccentrics, and thus a wider range of adjustability secured. This is particularly well aimed at in the high-speed form there presented, in which the trip gear is dispensed with, and the cut-off caused to vary by varying the throw of the steam wrist-plate motion. Such an engine can obviously be run at higher speed than a detachable gear. In the form of valve-motion represented in Fig. 184, which presents the Bates mechanism, the release of the valves is effected without letting go of the valve-arms. The valve-rod is so jointed that the strain on the valve keeps the valve-rod folded over its centre of motion until the wrist-plate in its motion causes the line of strain on the valve-rod to pass outside of the centre-line through the wrist-plate pin. When this happens, caused by the governor action, the valve-rod unfolds and the weight causes the valve to drop shut.

113. Steam-thrown Valves.—It has been worked out by

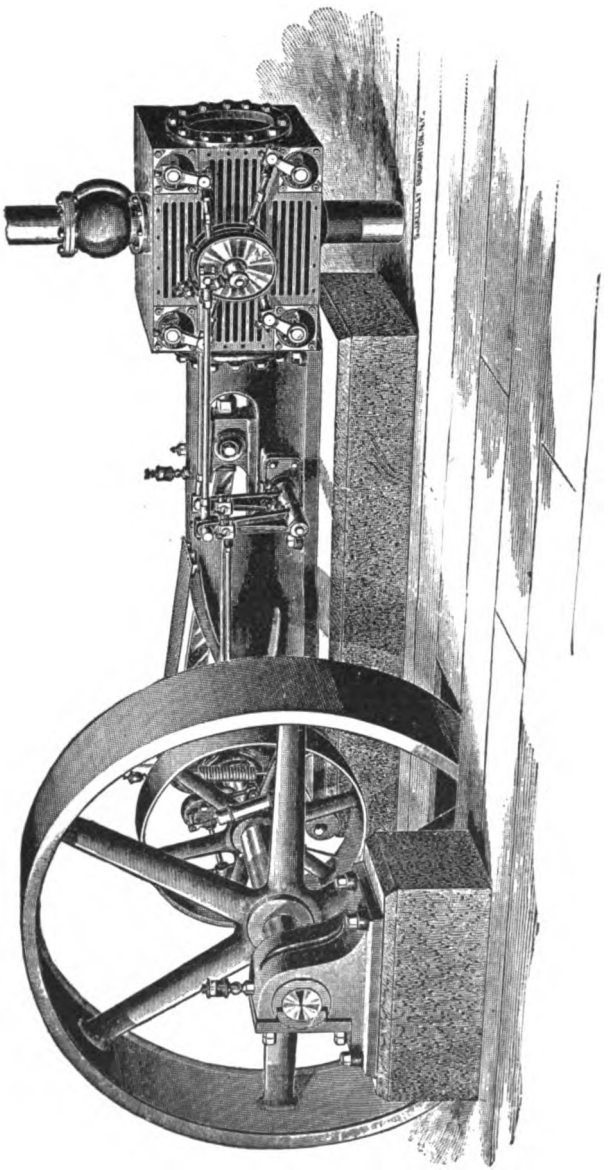

FIG. 183.

several designers to operate the valve of the engine by a steam-cylinder instead of by a positive connection by rods to the shaft. This peculiarity is the feature of most direct-acting pumps having no fly-wheel. In the absence of the fly-wheel and with constant resistance a pump of this class whose piston-rod is connected to its own valve-rod will stop at the end of its stroke, with its valve covering the ports so that no succeeding stroke can occur. The solution of this problem which is most usual is to have the piston of the main engine operate a small steam-valve before the end of its

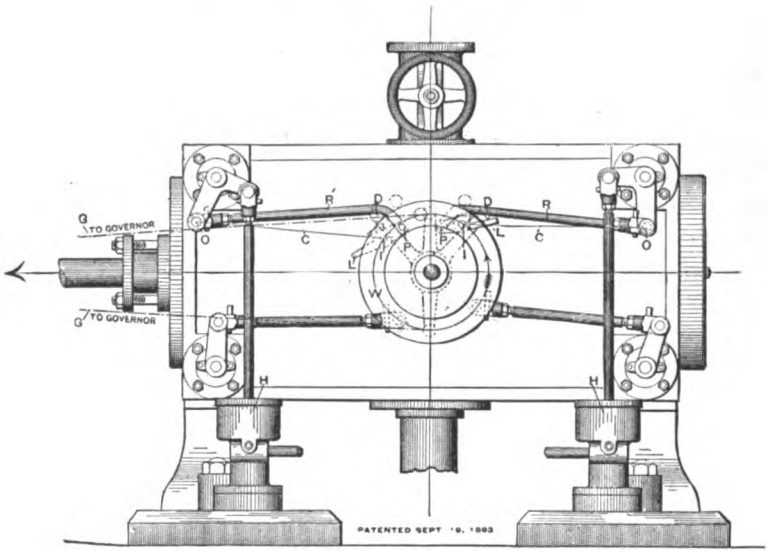

FIG. 184.

stroke. This small steam-valve admits pressure to an auxiliary piston in the valve-chest of the main engine, and this piston, yielding to the pressure, moves in its cylinder, carrying with it the valve of the main engine into the position to admit steam to the main cylinder for the reverse stroke. It will be apparent that this principle precludes stalling or stopping on the centres, because the main valve admits steam to the main engine until the valve of the main engine is reversed by the auxiliary engine. Such engines can run at any speed or slowness, and will start from rest when steam is turned on. They

must be full-stroke engines working without expansion, and have nothing but exhaust compression to keep all strokes of uniform length. (See Cornish Cataract, par. 41.)

The valve-gear of a duplex pump is identical, the only difference being that the auxiliary cylinder of the single pump has been made to do pumping work instead of merely throwing the valve of its consort engine. The two cylinders lie side by side, and the valve of the first cylinder when it reaches the end of its stroke is operated by the working stroke of the second cylinder at about the middle of its travel. This peculiarity brings about a pause at the end of each traverse

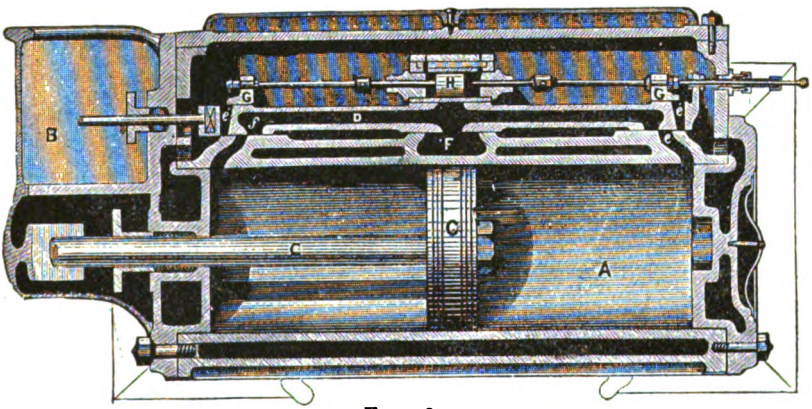

FIG. 185.

of the water-piston or plunger, whereby the water-valves have a chance to seat themselves before the current of water through them is reversed.

Almost the only form of mill- or factory-engine using the steam-thrown valve was that brought out by the firm of Babcock, Wilcox & Co., about the close of the Civil War, and presented in Fig. 185. A little steam-cylinder, whose piston is *H*, threw the cut-off blocks *G* by steam admitted alternately on one and the other side of the piston *H*. The period of such admission was controlled by the governor, while the main or distributing valve was driven by an eccentric and rod in the usual manner. This illustration will serve also as an example of short passages for steam and long passages for exhaust (par. 100).

CHAPTER XI.

REVERSING VALVE-GEARS. LINK-MOTIONS.

114. Reversing-gears with One Eccentric.—It will be apparent from discussions in parts of Chapters VII and VIII, which have treated of the setting of valves, that if the valve had neither lap nor lead, so that the angular advance of the valve-crank was 90° ahead of the engine-crank in order to go forward, it could not be at the same time 90° ahead of a crank which was to turn backward. A very simple reversing-gear for a valve of this type can be made by having the valve-stem driven from a rocker-arm and so constructed that the rod of the eccentric can be geared to it either on the same side of its centre of motion as the valve-stem or at will upon the opposite side. From the discussion in par. 83 it will be apparent that when the motion of the eccentric-rod is reversed by the rock-shaft the engine will turn in one direction, and when it is not so reversed it will turn in the other. When the valve has lap or lead or both, and is intended to work expansively, the valve-crank is 90° + an angle a, which represents the angle AOE in Fig. 142, ahead of the main crank. Hence the position of the centre-lines of eccentrics for forward and backward motion will be distant from each other an angle represented by $180° - 2a$, and a reversing motion by the method just described is impossible.

There are two methods of reversing an engine using one eccentric. The first is to have the eccentric loose upon the shaft and free to move independently of that shaft between two stops which are bolted, keyed, or otherwise secured to the shaft. The loose eccentric has a corresponding lug or

projection which engages with these stops. The angular distance between the stops upon the shaft is so adjusted that when the first one engages with the lug upon the eccentric-disk, the relation of the eccentric-crank to the main crank is that which adjusts the valve-gear to distribute steam for forward motion. The resistance of the valve as the engine turns in one direction keeps the lug and first stop continuously in contact. If the engine-shaft be turned in the opposite direction by operating its valves by hand, the first stop will leave contact with the lug, and the eccentric will stand still by reason of the friction of its attachments until the second stop on the shaft comes in contact with the lug on the eccentric. The adjustment of the second stop is such that when it touches the lug the relation between the eccentric and the main crank is that for distributing steam for backward motion. This arrangement of loose eccentric with lug and stops on the shaft has been a very favorite design for ferry-boat engines. The working of such boats in and out of slips is done by hand-working of the valves in any case, and their comparatively slow rotative speed and the large masses in the disks and rods lend themselves to this arrangement.

The second single reversing-gear adjusts the eccentric through the angle $180° - 2\alpha$ by having the latter borne upon a sleeve to which it is feathered, so that it must rotate with it and the shaft, while the sleeve can be slid lengthwise on the shaft under the eccentric. This sliding of the sleeve is done by a lever which has a latch attachment so that it can be locked in the desired position. The sleeve has a spiral slot cut in it, the slot subtending the angle of $180° - 2\alpha$ and fitting a radial pin projecting from the shaft. It will be obvious that when the sleeve is slid lengthwise along the shaft the slot and pin will twist the sleeve through the angle $180° - 2\alpha$, and carry the eccentric through that same angle. The latch prevents readjustment except at the will of the runner. This makes a very compact reversing-gear, but is limited to engines of small size (Fig. 50).

115. Reversing-gears with Two Eccentrics. Gab-hooks.—It makes so much simpler a reversing-gear to use two eccentrics, one set $90° + a$ ahead of the crank for forward motion, and the other set $90° + a$ behind it, which becomes that same angle ahead of the crank for backward motion, that this type of reversing-gear is much the most usual. There is a rod from each eccentric which is to be hooked and geared to the valve-stem at will, and the method of bringing the forward and backward eccentric-rod into gear with the valve-stem constitutes the differentiating feature of all forms of motions.

The simplest and oldest device to attach the eccentric-rods to the valve-stem is a hook. This hook, called a gab or gab-hook, is simply a hole which fits a pin on the valve-stem or on a rocker-arm connecting to it, which hole has one side cut out and away so that it can be lowered down upon the pin or lifted off from it. Of course the two hooks must not be engaged with the same pin at once, and many different methods are used to take care of the hook and rod which for the time being are not to engage with the pin. The simplest is a lifting-roller so adjusted that when brought against the under side of the rod it lifts it above the plane in which the pin travels. This may be done also by lifting a suspending-link. Other devices involve the use of cams or bars which shut down over the sides of the hook and fill up the hole,

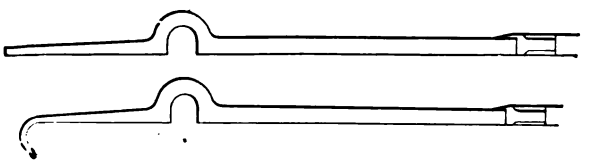

FIG. 186.

and are held in place by a latch or snap. With these the eccentric-rod may slide upon the pin itself, but when these appliances are in place the hook is closed and takes no hold of the pin. Fig. 186 presents certain forms of gab-hooks.

The objections to the gab-hook are three:

1. The engine reversed by this means must have a low speed of rotation.

2. The engine has to be of such a character that the reversal can be leisurely. It is not convenient to reverse at speed with a gab-hook, but the engine must be turning slowly when the hook is dropped upon the pin.

3. The engine must be of such a character that it can be started by hand-working of its valves. The reason for this is that there is but one position of the main crank in which the hook of the forward gear and that of the backward gear coincide, so that either can be dropped upon the pin and operate the valve properly to pass from forward to backward motion. This position is the dead-centre, either outward or inward, on which the engine-runner would never stop his engine if it could be helped, so that hand-starting is compulsory.

To avoid the objections to the ordinary gab-hook so that the engine might be reversed at speed and started in the reverse direction without hand-working, the mouth of the hook was widened and the sides lengthened so that it took somewhat the shape of an inverted letter V. The distance apart of the horns of this V hook was made equal to the travel of the eccentric-rod plus the diameter of the pin, so that, no matter where in its course the pin might happen to

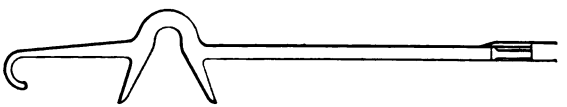

FIG. 187.

be, the sides of the hook pressed upon the pin would slide it in the direction of motion until it caught into the hook proper at the foot of the V. These V hooks were early solutions of the problem of reversing the locomotive engine. Figs. 187 and 177 give the general appearance of such hooks.

116. Link-motion of Howe or Stephenson.—The difficulties attendant upon large-size hook-gears for reversing when they came to be applied in high-speed practice brought about the development of what have been called the link-

motions. If the forward and the backward hook be made to face each other so that one hooks upon the pin from the top and the other from the bottom, and if these two hooks be

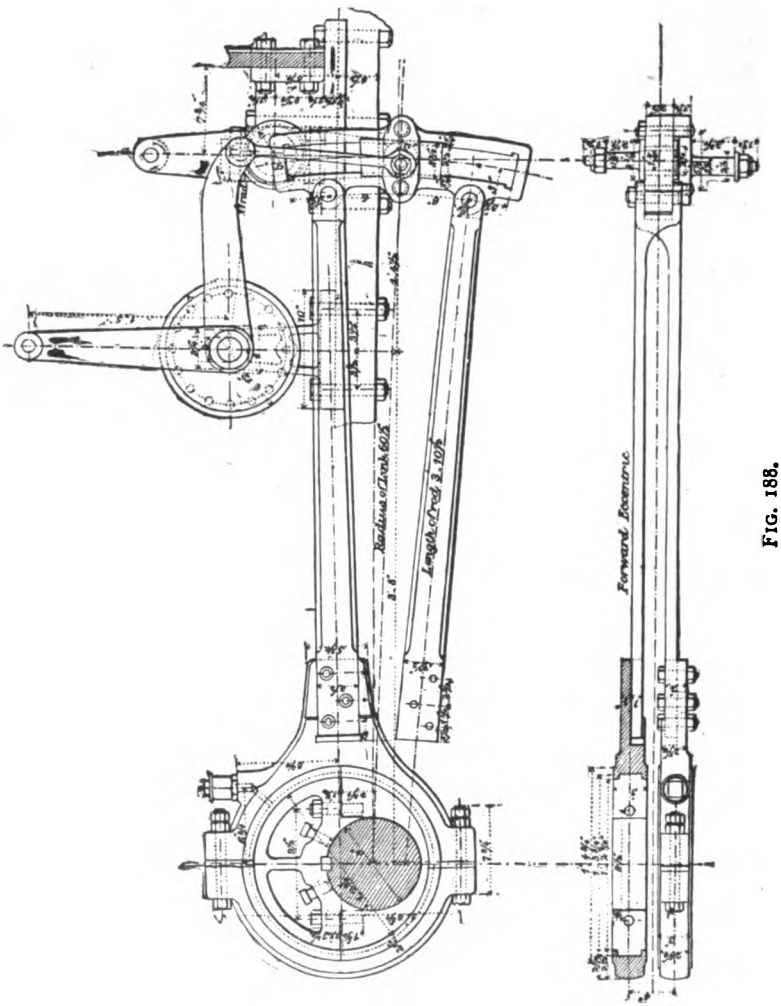

FIG. 188.

joined together on their outer and inner edges by two arcs of circles struck from the centre of the shaft, there will be derived the Stephenson link. The upper hook of the old gear

becomes that part of the slot in the link just behind the joint of the forward eccentric-rod to the link, and the lower hook the similar part of the link-slot behind the joint to the backward eccentric. The curved profile of the link keeps the two eccentrics from undesired motion, and the pin of the valve-stem fits in a suitable block in the slot of the link, so that the latter is always ready to be moved to bring either forward or backward eccentric to drive the valve, while the eccentric not required simply vibrates the link around its virtual centre without affecting the valve. Fig. 188 shows the typical Stephenson link-motion as designed for locomotive practice on the Pennsylvania Railroad, and Fig. 189 its skeleton

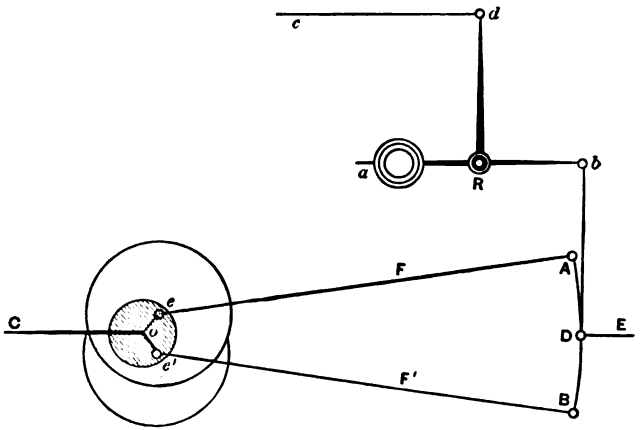

FIG. 189.

diagram. There require to be attached to the link convenient connections to bring the forward or backward eccentric into line with the pin and to hold it at the desired position, but their construction requires no explanation.

This simple form of reversing-gear was applied to early locomotives turned out in England by Stephenson, but strong claims have been advanced by a William Howe for its first suggestion in 1843.

117. Features of the Stephenson Link-motion.—The Stephenson link-motion has certain peculiarities. If the valve had neither lap nor lead, so that the two eccentrics were

180° apart, it would be apparent that the link would vibrate around a virtual axis at its middle point, and that when the pin connected with the valve-stem coincided with that axis the valve would have no motion. The angle between the eccentrics is not 180°, on account of lap and lead, and hence when both eccentrics are near the horizontal line in a horizontal engine they are each moving the link in the same direction at top and bottom. That motion, however, is usually so small that it does not uncover the laps over the port; or in other words, cut-off takes place before the stroke begins. At intermediate points above and below the centre the travel of the valve is less than full throw of the eccentric, and by reference to Chapters VII and VIII it will be apparent that earlier cut-off and greater expansion will be secured by this diminished throw, and yet without seriously distorting the exhaust events, since the angular advance is not disturbed. It is no disadvantage in locomotive practice to have compression increase with earlier cut-off. The heavy duty of the locomotive is in starting its load from rest, and at very high speeds on a level track the engine is doing much less work, so that it can be operated at earlier cut-off. The compression is a decided advantage at the high rotative speeds. It is the simplicity of combining the variable cut-off gear which is desirable with the reversing-gear which is necessary, and in one mechanism so simple as to be operated with one lever, which has given the Stephenson link-motion its popularity for the locomotive.

The only objection to be urged against the Stephenson link is its slight inaccuracy, which produces a variation of the lead at different points of cut-off. By reason of the fact that the link is raised and lowered, carrying with it the rods, the latter are shifted around their eccentric-disks. It will be seen that when the angle is varied which the eccentric-rod makes with the line through the dead-centre of the engine-crank, from which angles are counted, there will be of necessity a motion of the valve at dead-centres of the engine-crank, since the effect produced is to diminish the angle $90° - a$, which

is therefore the same as increasing the angular $90° + a$ which measures the angular advance ahead of the crank. To increase this angular advance ahead of the crank is a thing which is done where the lead is to be increased (par. 91). The lead, therefore, increases as the cut-off is made earlier. The following table shows the extent of these variations in a standard locomotive gear, especially when a little worn.

Notch in Sector of Lever.	Travel of Valve.	Port-opening.		Point of Cut-off.		Point of Release.		Lead.
		Forward.	Back-ward.	Forward	Back-ward.	Forward.	Back-ward.	
20	5	$1\frac{1}{4}$	$1\frac{1}{4}$	$20\frac{5}{8}$	$20\frac{1}{8}$	$23\frac{1}{8}$	$23\frac{1}{8}$	$\frac{1}{16}$
19	$4\frac{1}{8}$	$1\frac{1}{4}$	$1\frac{1}{4}$	$19\frac{5}{8}$	$19\frac{1}{8}$	$22\frac{1}{16}$	$22\frac{1}{16}$	$\frac{1}{16}$
18	4	$1\frac{1}{8}$	$1\frac{1}{8}$	$18\frac{7}{8}$	$18\frac{1}{8}$	$22\frac{1}{8}$	$22\frac{1}{4}$	$\frac{1}{8}$
16	$3\frac{1}{8}$	$\frac{7}{8}$	$\frac{7}{8}$	$16\frac{1}{8}$	$16\frac{1}{8}$	$21\frac{1}{16}$	$20\frac{9}{16}$	$\frac{1}{16}$
14	$3\frac{1}{8}$	$\frac{11}{16}$	$\frac{11}{16}$	14	14	$20\frac{1}{16}$	$20\frac{9}{16}$	$\frac{1}{16}$
12	$2\frac{7}{8}$	$\frac{9}{16}$	$\frac{1}{2}$	12	$11\frac{3}{4}$	$19\frac{1}{2}$	$19\frac{9}{16}$	$\frac{1}{16}$
9	$2\frac{5}{8}$	$\frac{7}{16}$	$\frac{13}{32}$	$9\frac{1}{8}$	$9\frac{1}{2}$	$18\frac{5}{8}$	$18\frac{5}{16}$	$\frac{1}{32}$
8	$2\frac{1}{8}$	$\frac{11}{32}$	$\frac{9}{16}$	8	$6\frac{3}{4}$	17	$16\frac{5}{8}$	$\frac{1}{32}$

The throw of the eccentrics was 5 inches, the steam-ports $1\frac{1}{4}$ inches and the exhaust-ports $2\frac{1}{4}$ inches wide. The lap was $\frac{7}{8}$ of an inch outside and $\frac{1}{16}$ inside.

118. Gooch's Link-motion.—To counteract the difficulties of the Stephenson motion caused by shifting it around the eccentric and shaft, Sir Daniel Gooch, a railway motive-power engineer of England, reversed the Stephenson link and

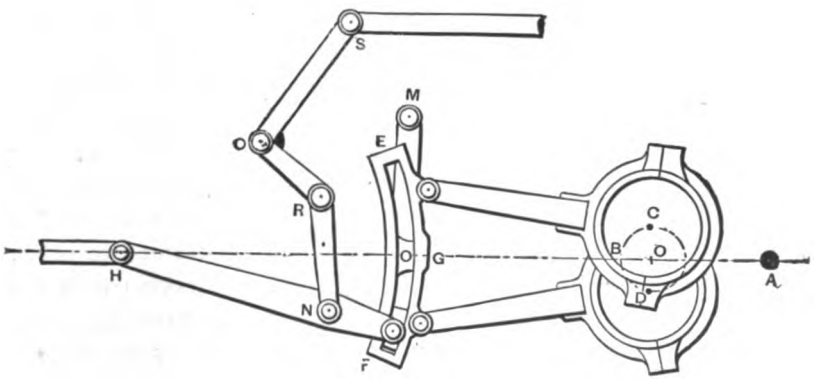

FIG. 190.

made the valve-stem pin slide up and down in the link which was suspended, so as to be unable to rise or fall (Fig. 190).

It is obvious that the reversing and cut-off action are retained, but the variation in the lead is eliminated. This motion has never been popular in America, since for its satisfactory working the valve-stem must have considerable length, and the design of American locomotives makes it difficult to secure this. If the curvature of the link has a short radius, irregularity in the valve-motion is introduced.

119. Allan's Link-motion.—The Allan link-motion combines the characteristic features of the Stephenson and Gooch. The link and valve-stem are swung from opposite ends of a lever pivoted at or near its centre, and variation in position of the stem and link is produced by lifting one and lowering the other. The advantage of this form is the straight profile of the link, which makes it easy to machine in the shops, but, like the Gooch link, it has never met much acceptance among American locomotive-builders, where the type of outside-cylinder engine, which is preferred, makes it necessary to put the valve mechanism between the frames under the boiler. It has the advantage over the other two that the weight of link and of valve-stem partly balance each other so that counter-balancing weights or springs are not required as in the other forms.

120. Radial Valve-gear. Joy's Valve-gear.—Variations have been made upon the link-motion hitherto discussed in the effort to do away with one of the eccentrics or both. The eccentrics in fast-running engines are sources of friction by reason of their large diameter, and they not infrequently give trouble from heating. The general name of radial valve-gear has been applied to such valve-motions as transmit a motion to the valve-stem from an arm one end of which moves in a closed curve and which has another point constrained to move in either an open or a closed curve by its connection with the frame through levers or slides. The closed curve described by the first point is usually a circle, an oval, or an ellipse, and motion is imparted from an eccentric or a crank or by the connecting-rod.

The best-known valve-motion of this type is Joy's valve-

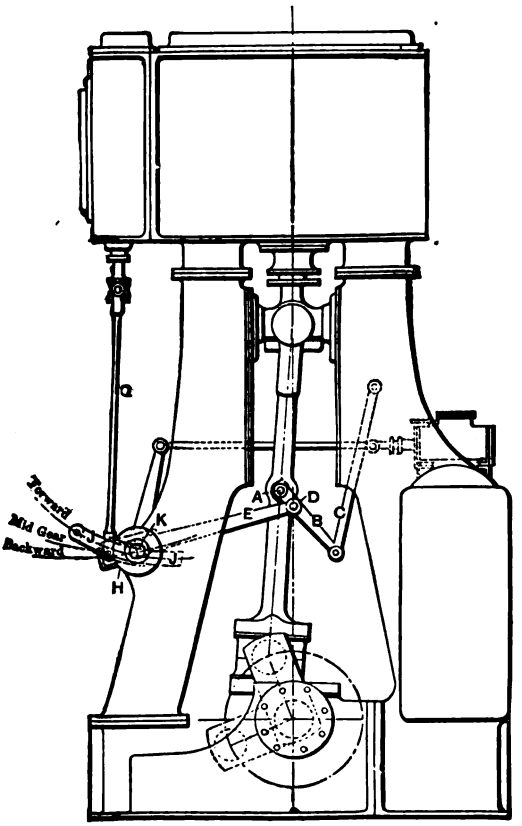

FIG. 191.

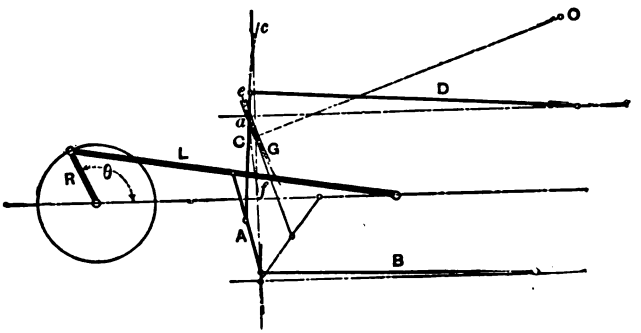

FIG. 192.

gear, shown in Fig. 191 as applied to a marine engine, and in Fig. 192 in outline. It has been used quite a little in both marine and locomotive service. It will be seen that the motion originates from a point on the connecting-rod which gives from its connection to a secondary link a reduced motion to the lever which drives the valve-stem. The point *D* describes an oval. The other end of the link slides in a curved path to provide for the back-and-forth motion of its first end. The reversing effect is caused by the angle at which the curved slot is inclined. A variation in the point of cut-off is produced by the variation in the throw of the valve-

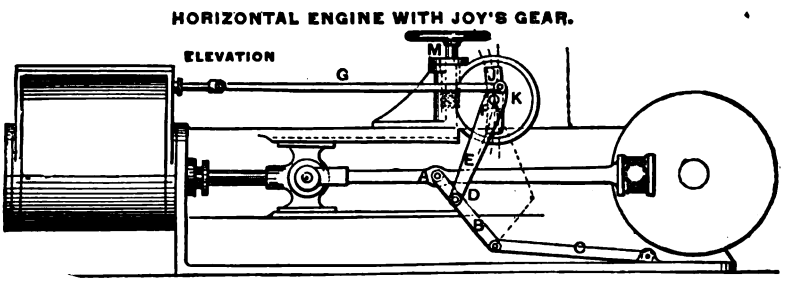

FIG. 193.

stem, which is least when the curved slide is midway between its forward and backward position. The slide may be replaced by causing the point *K* to vibrate from its connection to a link whose radius is the same as that used in describing the slide (*J* in Fig. 195). The Joy valve-gear is made up entirely of pin-joints for the moving parts, and gives equal lead, cut-off, and port-opening in both gears. The objection to it in locomotive practice is the exposed position of the links outside of the frames, where accidental injuries are most likely to affect them. Fig. 193 shows this gear applied to a stationary engine.

121. **Walschaert Valve-gear.**—Almost the only other form of valve-gear which has contested with Joy's the sole acceptance with locomotive-builders is a Swiss motion which bears the above name of its inventor. Fig. 194 shows that the double motion is derived partly from the engine cross-

head and partly from a crank or eccentric 90° from the main engine-crank. The valve gets an aggregate motion from the cross-head and from the curved link, and reversing is effected by reversing the motion derived from the eccentric-rod when the sliding-block is on one side or the other of the fixed centre

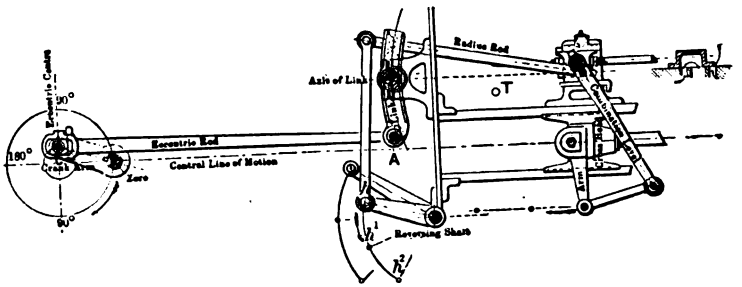

FIG. 194.

of motion of the curved link. It will be seen that such a gear produces no variation in the lead.

The valve-motion designed for locomotives by Mr. George S. Strong has many features similar to the foregoing. The motion is obtained from a single eccentric, which has two levers attached to the strap. One is rigidly bolted to it, and the other connected by a pin-joint. The two levers have a common fulcrum-pin which is suspended by a link from a block above, whose position can be varied upon a sector. The position of the blocks upon the sector determines the inclination of the path through which the fulcrum-pin travels. The exhaust-valves of the Strong locomotives have their own motion independent of the admission. This engine uses gridiron valves.

122. Brown, Marshall, Hackworth, and Angstrom Valve-gears.—The valve-gears identified with the above names are reversing-motions with one eccentric opposite to the crank. The difference between them is mainly in the method used to guide the end of the eccentric-rod farthest from the shaft. Fig. 195 shows a Marshall gear as applied to marine engines. The one end of the eccentric-rod *I* describes a circle concentric with the shaft, and the end

farthest from the shaft swings in an arc controlled by the link *J* and by the position of the fixed centre of the link. The valve-rod and stem are attached to the eccentric-rod *I* at the point which will give the desired throw to the valve. If the centre of the link *J* be thrown over to the right, the engine will reverse, and at intermediate positions the throw of the valve is diminished and cut-off takes place. The Brown gear has a block whose inclination is varied, as in the Joy gear, and Angstrom uses a pair of radius-bars to make a parallel motion and compel the head of the rod to travel in a straight path.

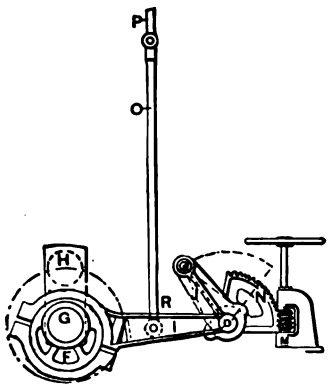

FIG. 195.

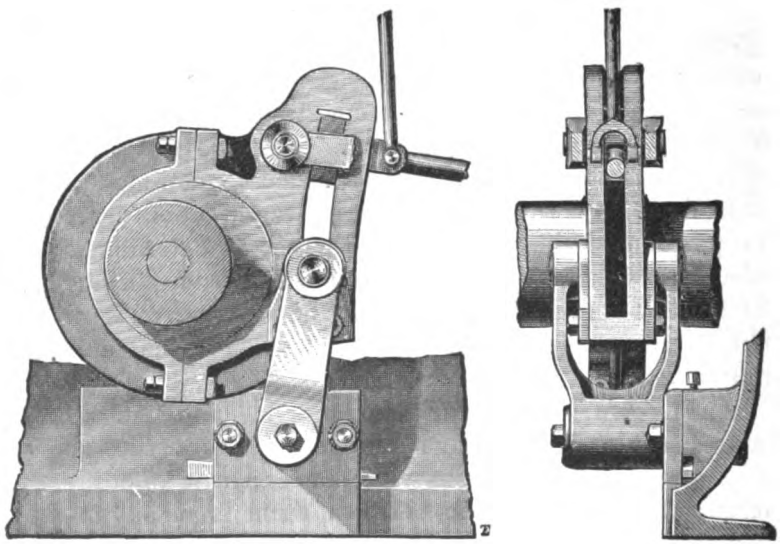

FIG. 196.

123. Allen Link-motion.—The link-motion first proposed by Allen is the one which in a modified form is known as the

Pius Fink gear. It has no eccentric-rod properly so called, but the link is an integral part of the back strap. The half of the strap which carries the link has a fulcrum-pin by which it is attached to the engine-frame above or below the shaft, so that the motion of the centre of the link is an aggregation of the back-and-forth motion of the strap as a whole, and the up-and-down motions caused by the constraint of the fulcrum-pin which prevents undesired motion of the point where it is attached. Fig. 196 shows the Allen link. If the engine is not intended to reverse, but variation in point of cut-off only is desired, the slot in the upper half above the fulcrum-pin only is needed. As the valve-stem approaches the centre-line of the shaft, its motion diminishes. In the Porter-Allen engine the separate exhaust-valve is driven from a fixed point near the end of the slot, giving constant travel, release, and compression. The eccentric of the Allen link is set opposite or at 180° with respect to the crank.

124. Link-motion for Riding Cut-off Valves.—It adds considerably to the complication of a valve-gearing which uses an independent cut-off valve when it is required to reverse the motion of both valves. The cut-off valve may have its independent link-motion coupled to the reversing-levers so that one motion reverses both the main and the cut-off valve. To avoid this complication many designers have arranged the cut-off valve to work with an eccentric 180° distant from the main crank, so that the cut-off valve works equally well with forward and with backward motion of the main valve.

Link motions for locomotives operated with cut-off valves are identified with the names of Polonceau, Gonzenbach, and Meyer. The student is referred to special treatises for study of their peculiarities.

125. Power Reversing-gears. — The Stephenson link-motion has been a favorite valve-gear for marine engines, for reversing rolling-mill engines and similar massive designs. The weights and masses to be moved and the necessity for quick action have compelled designers to apply mechanical power to reverse the link-motion. Steam power or hydraulic

pressure have been the usual methods. Steam power has been applied first by means of a reversing-engine on whose shaft was a screw. The nut of this screw travelling in one direction or the other moved the link into forward or backward gear. The second plan is to attach the rod of the tumbling- or rock-shaft to a steam-piston in a cylinder. This would be a too rapid reversing motion, so that it must be controlled for speed and the piston must be held still or latched at the desired point of the motion of the link. This is attained by attaching to a prolongation of the piston-rod a second piston which moves in a cylinder filled with water or oil at both ends. The motion of this oil-piston from one end of the cylinder to the other will be controlled by the passage of the oil through a pipe connecting the two ends of the cylinder through a valve. The velocity of motion is controlled by the greater or less opening of this valve, and when the valve is shut the piston is locked in place and the link is held. The third form applies the principle of steam steering-engines to the link-motion. The motion of the engine to throw the link is continually closing the admission-valve of this auxiliary engine, so that continuous motion of the hand is necessary to keep the link moving. When the hand stops the engine stops. This prevents the attendant from jumping the valve-gear.

Hydraulic-pressure reverse-gear is available where water under sufficient pressure can be had from pumps or accumulator. The power cylinder is sufficient with hydraulic pressure, since a closure of both inlet and outlet valves to the piston locks it rigidly in place and holds the link at the desired position. The piston-rod of the hydraulic cylinder either throws the link directly, or operates a tumbling- or rock-shaft to which the link is connected by rods.

CHAPTER XII.

VARIABLE CUT-OFF VALVE-GEARS.

126. Introductory.—The discussions of Chapter VI should have made clear the distinction between a throttling-engine and a variable cut-off engine. The foregoing treatment of valve-gearing should have made it clear that there were several ways in which the valve-gearing could be so designed that the point of cut-off could be varied at the will of the engine-runner by his adjustment of the valve-gear. The conditions which make this design to be preferred to an automatic variation of the point of cut-off by the engine-governor are to be met in engines for propulsion, such as the locomotive and the marine engine, in engines for pumping and hoisting where the work does not vary irregularly, and in many cases of factory practice where the variation is in starting the machinery only, but not in the regular service of the engine.

The methods to be used to vary the points of cut-off by hand are usually the same as those which will be used when the governor is to make the point of cut-off vary. It will be seen that four general principles underlie the methods which will be used in either the variable or the automatic cut-off engine to secure this end.

127. Cut-off Varies by Varying Throw of Valve.—The discussion of motion-curves in par. 93 showed that the cut-off became earlier as the throw of the valve became less. This is the way the link-motions act, and in engines for propulsion and for hoisting, which require to be reversing as well, the link-motion will always be found. The Allen or Fink link (par. 123) can be made an automatic variable cut-off by causing

the governor, as the engine speeds up, to lower the valve-stem operated by the slot in the link, so as to diminish the throw. The slider in that slot can be raised and lowered by hand, if desired, by having it mounted upon a screw.

The second great method of securing cut-off by varying throw is to arrange the eccentric so that the effective valve-crank can be made less or more. In the discussion of shaft-governors hereafter it will be seen that it is quite easy to vary the eccentricity of the eccentric without changing its angular advance by means of an equilibrium between revolving weights and springs. The eccentric can be made to have a variable eccentricity by mounting it upon the outside of another eccentric which shall be adjustable under the outer one. The effective eccentricity of the outer one can thus be varied between the sum and the differences of the eccentricities of the two eccentrics.

The third method of varying the throw is to be met in cam valve-gears. The profile of the cam can be made to be different at different transverse sections. A mechanism which slides the cam underneath the roller which it drives will cause the valve to open farther and remain open longer when the valve-stem is driven by the wider and more prominent profile of the cam. This lengthwise sliding of the cam on the cam-shaft can be done by hand or by a governor.

128. Cut-off Varies by Varying Lap of Valve.—The discussion of lap in Chapter VII, which showed it to be a matter of construction of the valve itself, might appear to indicate that the lap of a given valve is not a variable. This is true for a valve-gear dependent upon one valve only, or in which the steam-ports and cut-off edges of the valve are parallel. The discussion in par. 96 will have shown that as the lap is increased the cut-off becomes earlier.

Fig. 197 shows the form of riding cut-off valve having the simple expedient of making the valve in two parts, which are attached to the valve-rod by being fitted to screws on that rod. It will be noticed that one screw is right-handed and the other is left handed. When the rod is turned around its axis

by a hand-wheel or through similar means outside of the valve-chest, the two blocks are drawn together or separated according as that motion is right-handed or left-handed. A swivel-joint in the valve-rod permits this motion of adjustment, and

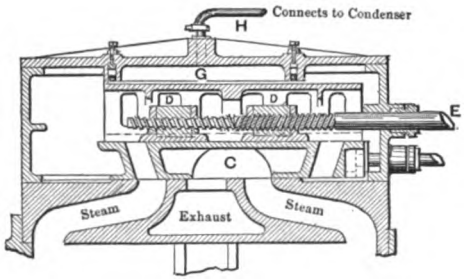

FIG. 197.

an indicator bearing a graduated scale can easily be attached to the valve-stem connection, so as to indicate the effective length of the valve from out to out, and the point of cut-off which belongs to each particular length of the valve.

Fig. 198 presents a scheme for securing a variable lap by

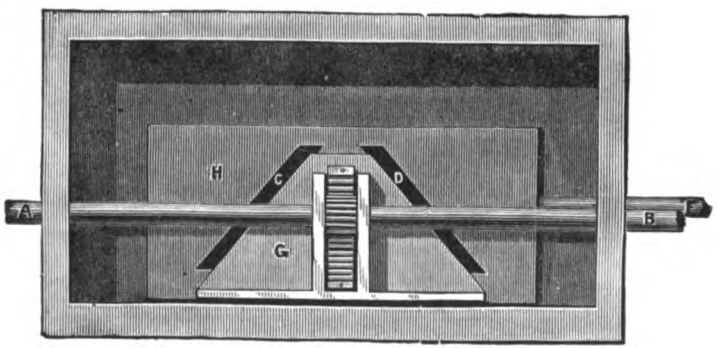

FIG. 198.

means of a similar secondary motion of adjustment for the rod of the cut-off valve. It will be observed that the ports and cut-off valve are trapezoidal in plan, so that if the valve be sliding back and forth in the position indicated it will have a certain lap with respect to the length of the ports. By rotat-

ing the valve-stem, the pinion which it carries will cause the valve to slide in a plane farther up in the chest, so that the lap at each horizontal line has become longer than it was in the position shown. This rotating of the stem and adjustment of the plane of the cut-off valve can be effected either by hand or by the governor. When it is to be done by the governor the mechanism becomes more simple when the method is followed which is shown in Fig. 199, which is the characteristic

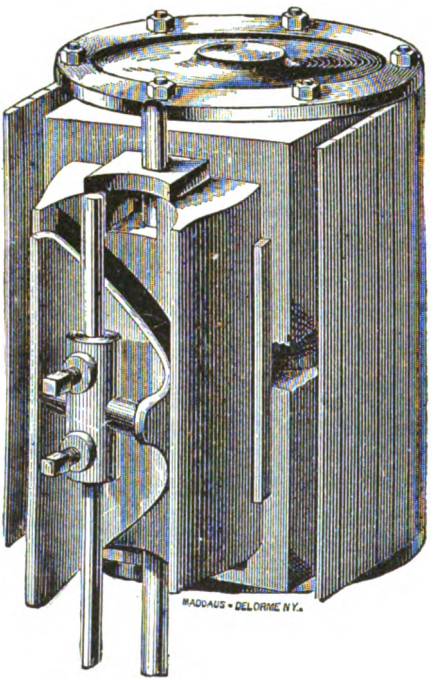

FIG. 199.

feature of the Rider cut-off valve-gear The flat plane of Fig. 198 has become the surface of a cylinder, and the cut-off valve is a part of another cylinder. As the spindle of the cut-off valve is turned through an angle as it slides up and down as usual, the surface of contact with the main-valve ports becomes longer and longer, the lap over the ports increases, and the cut-off grows early.

A scheme for securing an equivalent for the variation of the lap is represented in Fig. 200, in which it will be observed

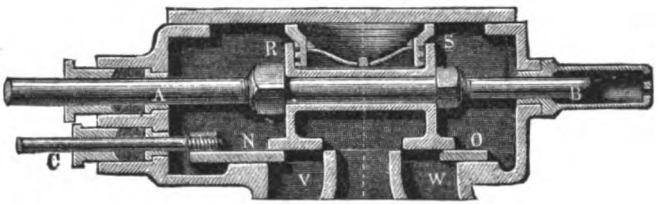

FIG. 200.

that the steam-edge of the port is made with a false seat to which motion can be imparted through the rod *C*. As cut-off takes place with the outer edge of the valve as it approaches its central position from its extreme throw, it will be apparent that to have the valve-seat moved to meet the valve is to produce the same effect as lengthening the lap of the valve over a stationary port. It is only necessary that provision should be made to vary the angular advance of the eccentric which drives the rod *C*. This shows a balanced valve also (par. 104).

129. Cut-off Varies by Varying Angular Advance of Eccentric.—To avail of this method to vary the cut-off, the eccentric cannot be positively fastened to the shaft. There must be some provision similar to the methods described in par. 114 to adjust the relation of the eccentric to the crank, or the mechanism of the shaft-governor (see Chapter XIII) must be so connected to the eccentric as to produce this effect. The objection will be that, while cut-off will become earlier with increasing angular advance, the exhaust events are distorted. An exception of note is to be met in the valve-gearing of the Buckeye engine, in which the ingenious expedient has been adopted of mounting the cut-off valve mechanism upon a rocking-arm which is a part of the main-valve gear. Increasing degree of expansion without interference with other functions follows from simple change of the angular advance.

130. Cut-off Varies by Varying Point of Release or Trip.—This form of variable cut-off gear has been fully discussed in Chapter X. The primary intent of most trip-gears is to have the period of the release of the admission-valve variable at will. The cam valve-gears can be similarly made variable by so arranging the cam itself or the lever which it operates that an adjusting mechanism shall cause it to come out of contact at the desired point of the stroke. The methods for accomplishing this result are very numerous and can be quite simple.

CHAPTER XIII.

GOVERNORS FOR STEAM-ENGINES.

131. Introductory.—The governor of a steam-engine is the device or appliance whose function is to control the mean energy of the steam-engine when the external resistance varies. Its functions differ from those of the fly-wheel, which has to regulate or supply excess of energy and give it out when demanded for a short period. As soon as its capacity for storing or restoring energy is exhausted a permanent change in the speed of the engine occurs, and then the governor must take hold to control and vary the supply of energy to the cylinder and thus maintain an equilibrium between resistance and supplied energy at the normal or desired speed.

The usual condition is that the speed of the engine or number of revolutions per minute shall be kept the same, and the governor is expected to produce variations in the pressure in the cylinder by the methods discussed in Chapter VI. It will thus be noted that while the governor is really an appliance for controlling energy, its immediate function upon its way to discharge its principal duty has become to control the speed of the engine. It may thus be seen that the governor may be expected to do two duties. The first will be to prevent disaster to the engine in cases where, by some breakage of belt or transmission machinery, the load should be entirely and suddenly taken off from a large engine. In the absence of any governor-device, an engine under this condition would "race," speeding itself up until its own internal friction replaced the released load. Usually before this happens something else in the way of disaster has occurred from the bursting of the fly-wheel by the centrifugal energy developed

within it, or from the entrained water which the steam has brought mechanically with it into the cylinder. It is this sort of racing due to sudden withdrawal of the resistance which has been the strain which has broken the shafts of steamers and wrecked their engines. The governor should be able so to check the delivery of energy to the cylinder that, even under such an accident as this, the racing or running away should be impossible. The second function of the governor is an extension of the first and increases it. With a governor of the first sort it will be expected that the unloaded engine will run a little faster than when it is fully loaded. The governor which would fulfil the second function would be one in which, no matter how the load might vary, the distribution of energy per stroke is so exactly proportioned to the resistance that the rotative speed of the engine will be constant under all variations. The governor which meets this second requirement and under all variations of load causes the engine to make the same number of revolutions in a given time, and hence each revolution in the same time, is called an isochronous governor. A governor to prevent running away and racing need not be isochronous. The governor which is intended to vary the point of cut-off in each stroke should be as nearly isochronous as it is convenient to make it. It is really the engine which becomes isochronous when so governed, and many engines are in use which attain isochronism within the limits of ordinary detection. Isochronism is more usually approached at high rotative speeds than at low (see pars. 35 and 36), but practical isochronism is attained with a permitted variation in most cases of two per cent above and below the normal. It will be seen that if the governor is to depend upon the variation in the engine-speed to readjust the supply of energy, that variation of speed must occur and must affect the governor before it exerts its control. Hence the governor is always "hunting" the engine and a little behind it. As the interval is shortened between the change of speed and the adjustment caused by that change, the engine approaches isochronism more closely. The governor

to be isochronous should therefore be sensitive and should not be sluggish.

132. Classifications of Governors. — Steam-engine governors may be variously classed. They may act to throttle the steam in the pipe (par. 74), or they may act to vary the duration of the admission but not its pressure (par. 75). The first class will be called throttling-governors, the second class cut-off governors.

Governors are nearly always founded upon an equilibrium or balance of forces at the desired or normal speed, so that the disturbance of that equilibrium due to a change of speed calls for an adjustment of the mechanism, and the motion of the adjustment alters the distribution. A direct relation between speed and centrifugal force has long induced designers to plan their governors in dependence upon the energy generated in revolving weights by centrifugal force. A second classification, therefore, would be to divide governors into centrifugal, inertia, and resistance governors according as variation in speed is desired to produce a variation in equilibrium between these forces and some other in opposition to them. The class of centrifugal governors may be divided into two according as the acceleration due to centrifugal force is balanced by the force of gravity or the tension of springs. The spring-governors are sometimes called balanced governors, because most of them will work in any position. The resistance-governor is operated by a variation in the resistance offered to motion by some part or organ of its construction. This is most usually done by the use of a fluid, when the governor becomes a fluid governor, or by a braking action which is stronger or weaker than the normal according as the speed increases or diminishes. The inertia-governors depend upon the principle that the variation in inertia of a revolving mass follows instantly upon a tendency to vary the speed, and change in position following the change of inertia adjusts the mechanism.

Governors may be classified again according to the method adopted to effect change in the valve-gear or the distribution.

Under this grouping they would appear in three classes. The first and most generally used might be called position-governors, in which the weights or masses produce their effect to diminish or increase the energy admitted to the cylinder as the position of these weights is varied by the preponderance of weight or some other of the forces which are in equilibrium at normal speed.

The second group would be called disengagement-governors. These are of several types, but their underlying principle is that at normal speeds the governor is without effect upon the regulating-train or is disengaged from it. As the speed varies above and below that of normal rate the governor engages or puts in motion a train of mechanism whereby the supply of energy is diminished or increased. This is a specially useful type of governor for water-wheel motors, but can easily be applied to engines. It will be seen, however, that it is likely to be a better type for safety against racing than to secure continuous isochronism.

The third group in this class will be called differential governors. In this class a certain normal speed is fixed by braking or a uniform resistance or a separate mechanism, and when the governor revolves at this speed it is without effect upon the regulating-train. Above that speed or below it the difference causes a motion of readjustment to take place, and this difference according as it is positive or negative closes or opens the supply of energy.

Governors may be divided again according to the arrangement or disposition of their mechanism. This gives rise to the division into spindle-governors, which revolve around a vertical axis or spindle, and shaft-governors, which revolve in a vertical plane with the main shaft of the engine as their axis or around an independent horizontal axis. The class of shaft-governors requires no connecting mechanism between the engine-shaft and the governor. The spindle-governors are connected to the engine-shaft by belting or gearing or both.

133. Fly-ball or Watt Conical Pendulum Governor.— James Watt in 1784 made application of the conical pendulum principle to the steam-engine as a means of controlling its energy. It had been used previously as a means of regulating clockwork, but lends itself so easily to the requirements of steam-engine practice that it has been the foundation of nearly all governing apparatus used until quite recently.

As applied in the early Watt engines, the governor consisted of two heavy balls suspended by links from a pin connection in a vertical spindle. The spindle is caused to revolve by belting or gearing from the main shaft, so that as the speed increases centrifugal force causes the ball to revolve in an orbit farther and farther from the spindle. The position of these balls can be made to vary a train connected with

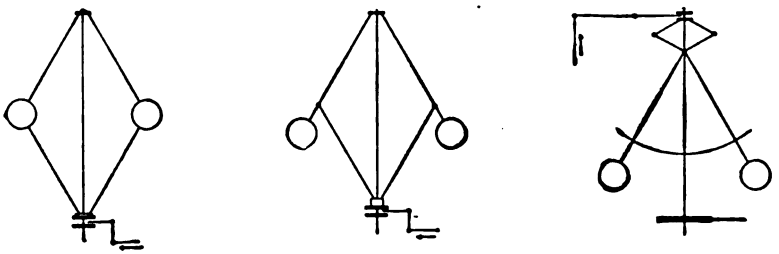

FIG. 205.

controlling valves, so that the admission or the throttling shall vary directly with their position. This makes this governor a typical position-governor. The connection of the balls with the train may be made by links from the balls to an adjusting collar on the spindle, or the links from the collar may be attached to the suspending links between the balls and their joints, or the suspending links may be prolonged beyond their point of support, and the regulating-train attached to these prolongations. The first plan produces the greatest change for a given change in the orbit of the balls. The other plans give usually greater leverage upon the regulating-train, so as to make lighter balls as effective as heavier ones arranged in the other way. Fig. 205 presents typical arrangements of the fly-ball or Watt governor.

134. Theory of the Watt Governor.—The theory of the conical pendulum-governor depends upon the balance between the effort of gravity represented by the line w in the left-

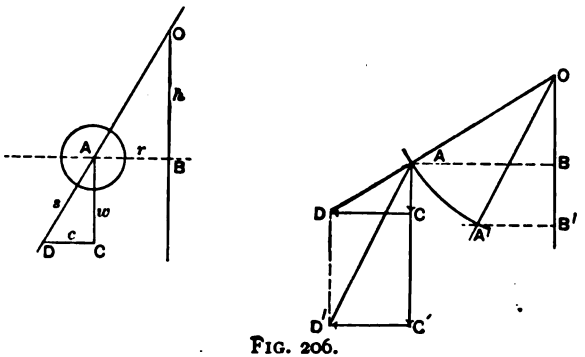

FIG. 206.

hand diagram in Fig. 206 and the acceleration caused by centrifugal force represented by c in that same figure. If h represent the vertical height on the spindle between the joint of the arm and the plane in which the balls revolve when the spindle makes n revolutions per minute, we have, by similar triangles,

$$\frac{h}{r} = \frac{w}{c}.$$

But $$c = \frac{Mv^2}{r} = \frac{w}{g}\frac{v^2}{r}.$$

Hence $$h = \frac{gr^2}{v^2}.$$

If $$v = 2\pi rn,$$

then $$h = \frac{g}{4\pi^2} \times \frac{1}{n^2},$$

or $$h = \text{a constant} \times \frac{1}{n^2}.$$

In other words, the distance of the plane of the balls below their point of support varies inversely as the square of the number of revolutions per minute. It will therefore be apparent that there will be a height h belonging to every

speed, so that the balls will be at their highest point at the highest permissible speed, and the valve operated by such a governor in a throttling-engine should be tightly closed by such maximum rise of the balls.

135. Defects of the Fly-ball Governor.—The fly-ball governor as thus constructed is a satisfactory device to prevent racing, but it is not isochronous unless made so by modification or by peculiarities introduced into the regulating-train or into the valve which it controls. It will be apparent that the opening of the valve or mechanism to admit more pressure to the cylinder is done by the weight of the balls. In large engines or where heavy masses are to be controlled, the balls must have suitable weight or mass to give the governor power to overcome the resistance of the valves and train and work quickly. It will be equally apparent, however, that the weight or mass of the balls will make them reluctant to yield promptly to a change in speed by reason of inertia or living force stored in them. Furthermore, increased weight in the balls increases friction at the swinging joints, and friction is further caused by any cramping action when balls are driven by the spindle, and changes of speed cause either balls or spindle to twist at such joints. The inertia (which is counted on as a means of regulating in the newer governors) made the old fly-ball governor both sluggish and lacking in sensitiveness. Moreover, the massive balls had to turn slowly to prevent the storage of too much energy in their revolving mass. Where the spindle principle has been retained and gravity is employed to open the valves when the speed falls, four types are to be noted in the search for closer isochronism.

136. Loaded Governors.—The loaded governor is an early solution of the problem of securing power in a governor without adding to the revolving mass of the balls. Fig. 207 illustrates a loaded governor as worked out for the Porter-Allen engine. It will be seen that the weight being placed on the spindle and symmetrical with the axis tends to pull the balls inward with a constant effort independent of the

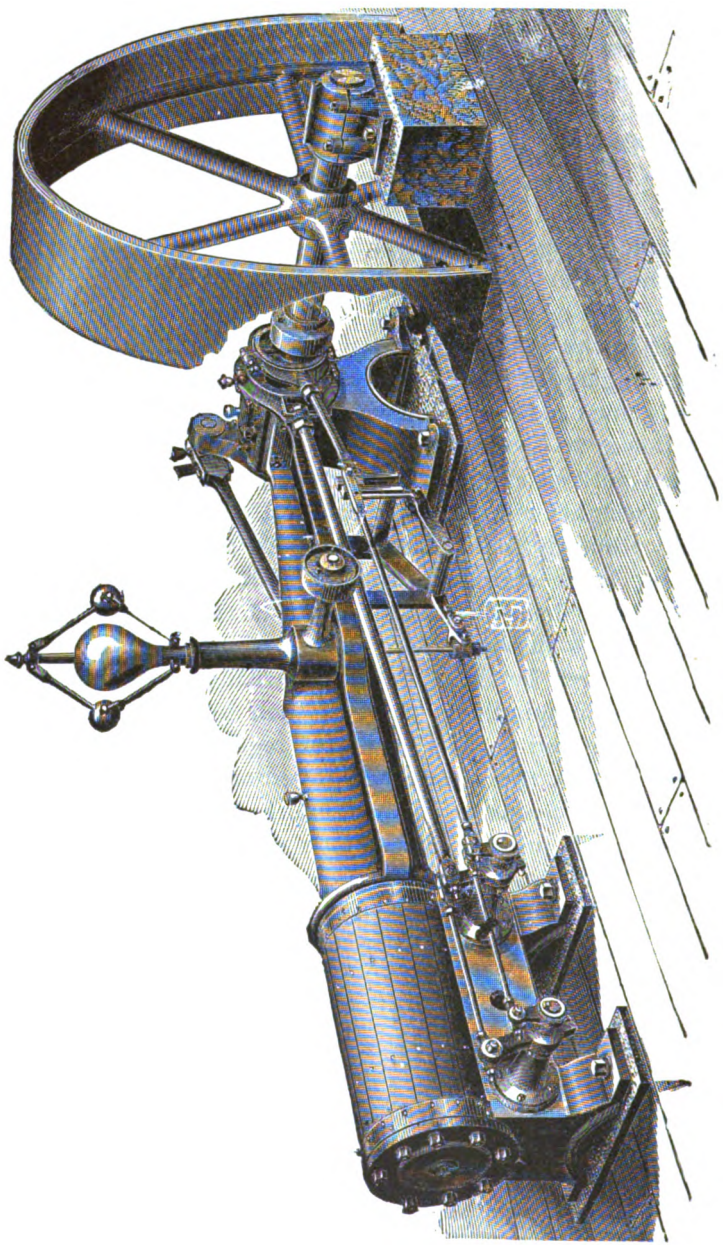

FIG. 207.

speed. The effect of this is to increase the force represented by the line w as shown in the right-hand diagram of Fig. 206, which is to increase the value of h which corresponds to any value of n. This can only be done by increasing the constant in the second member of the equation for h in par. 134, so that the given change in speed produces more change in height. Or, in other words, the given change in height will take place with a less alteration in velocity. This has therefore increased the sensitiveness of the governor, but not its friction. Furthermore, in the actual governor, as the weight for closing the valves is taken away from the balls the velocity of the governor-spindle can be greatly increased. Hence the governor takes less time to act upon a change of speed in the engine, because the governor can turn faster than the engine and it takes less time to act upon such change of speed. The loaded governor appears in several other forms among the designers of European engines, but the principle in all is the same.

137. Parabolic Governor.—It will be apparent from the equation

$$h = \text{constant} \times \frac{1}{n^2}$$

that the governor which should be perfectly astatic or should give perfect isochronism should be one in which h should travel through its widest variation for the least change in the value of n. The smallest change in speed should make the plane of the balls travel to its lowest limit for a decrease, and to its highest limit for an increase, in speed. At their highest limit they close their valve tight, and at their lowest limit they open it wide. Stated otherwise, the mechanism of the governor should be such that not only an actual change of speed, but merely a hint or suggestion of an intention to change, should be required in order to cause the governor to readjust the supply of energy in the proper way. This condition is met in the governor mechanism by causing the balls to travel outward from the spindle upon the arc of a parabola. A parabola has the property that its subnormal is constant

and equal to the parameter. The arms which connect the balls to the spindle can be made normals to a parabola by their construction (Fig. 217), and the height h in the equation of par. 134 and of the diagram Fig. 206 will then be this constant subnormal. In Fig. 217 the curve LC is the evolute of

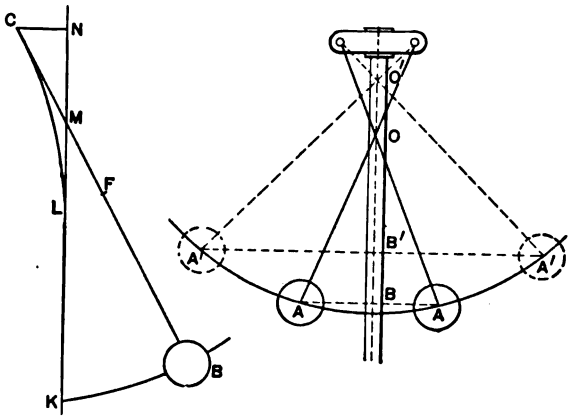

FIG. 217.

a parabola, and a flexible connection unwrapping from this curve will compel the ball B to move upon a parabolic curve. No matter in what part of the arc of the parabola the balls may be revolving, as centrifugal force sends them out the height h remains the same; whence it follows that the balls are in absolutely unstable equilibrium, and will when wide open or closed tight adjust the regulating-train with no change whatever in the value of n. This makes such a governor hypersensitive, or too sensitive to be of practical use. The effect of sudden changes of load with such a governor would be to introduce momentary departures from the normal or mean speed. This difficulty of the exact parabolic governor is corrected in two ways. First, by attaching a dash-pot to the governor-spindle, and secondly, by the use of approximate parabolas for the path of the balls. The dash-pot method attaches to the adjusting spindle a piston which fits in a small cylinder filled with oil. The resistance offered by the oil to displacement from one end of the little cylinder to the other

through and around the piston serves as a brake, to prevent jumping or racing or hunting, while no real resistance is offered to changes of position. The approximate parabolic governor is sometimes called the cross-armed governor. The suspending links are hung from points which are the centres of a circle whose radius is the radius of curvature of the parabola for that part of its arc over which the ball is to travel (*BC* in Fig. 217). This type, first introduced by Farcot in France, has been widely used. Greater power can be given to such a governor by loading it. Fig. 208 shows the Steinlen loaded approximate parabolic governor.

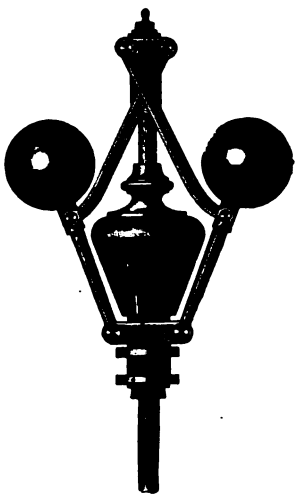

FIG. 208.

138. Balanced Governor without Spring.—Many forms of governor have been devised to secure an approach to isochronism by aiming at balancing the effect of gravity in part and thus make the governor more acutely sensitive to changes of speed. The direction in which this has been sought most frequently is to connect a second smaller weight to the suspending link on the opposite side of the vertical spindle. This arrangement has taken many forms, but perhaps that shown in Fig. 209, which shows the Buss governor, presents a European type as well known to Americans as any other of its class. The Babcock & Wilcox governor, shown in Fig. 210, will stand as representative of another solution, in which the weight of the balls is eliminated from the forces in action by the connection through the radius-rods P to the revolving spindle. Since the lengths of the rods n and P can be so related to each other that P shall be one half the length of n, a parallel motion will be formed so that the balls fly in and out, not in arcs of circles as in previous spindle designs, but in a horizontal plane. They do not have to be

lifted, therefore, in order to travel in a larger circle, and an increased speed is not needed to maintain them in their advanced position. That there may be a force to bring them in, the spindle is lifted by the weight W operating through a bent lever. The proportions of this lever and the variation of

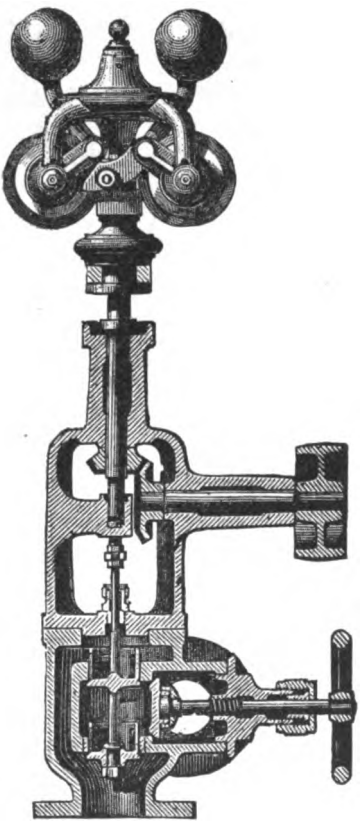

FIG. 209.

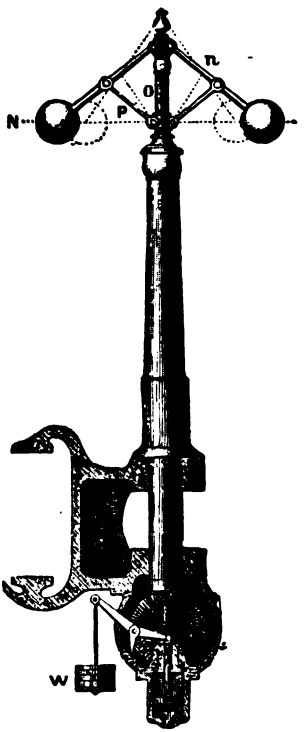

FIG. 210.

its arms are so adjusted that the centrifugal force at any given speed will just balance the weight in all its positions. Any increase in speed will cause the balls to preponderate, and a diminution of speed will cause the weight to preponderate. By connecting the spindle to the cut-off mechanism, the cut-off will be changed until the speed comes again to the

standard where the force resident in the weight balances the downward pressure on the spindle due to the centrifugal force of the balls. By increasing the weight W or diminishing it the desired speed can be varied. The dash-pot serves to prevent instability or jumping.

139 Balanced or Spring Governors.—A much nearer approach to isochronism is made by those forms of governor which substitute a spring for the force of gravity to draw in the balls and open the valve when the speed falls. This has been a very fruitful field for governor designs, and successful spindle-governors and all shaft-governors depend on this principle. They approach isochronism more closely because the tension of the spring can be made to increase as the centrifugal acceleration increases, so that the revolving weight and the spring are in equilibrium only at the normal speed.

Early forms of successful spring-governors of the spindle type are Pickering's, Fig. 211, and Waters', Fig. 212, Gard-

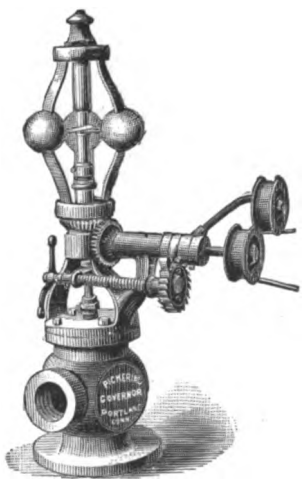

FIG. 211.

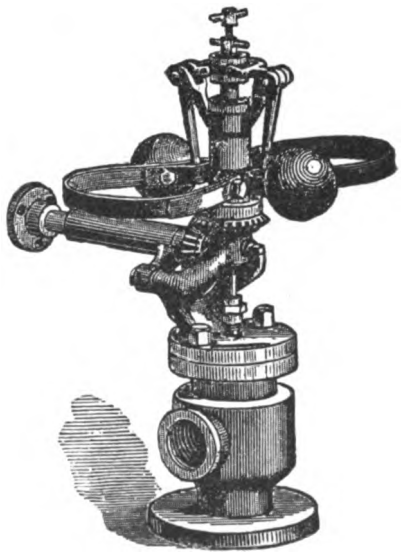

FIG. 212.

ner's and Wright's, Fig. 213. In Pickering's governors the jointed link of the typical fly-ball spindle-governor is replaced

by a flat steel blade to which the balls are secured rigidly through their centre of gravity. There are usually three balls, and the curve of the springs is such that in action they take the curve known as the cyma-reversa. In the Waters governor the balls are similarly mounted on flat-blade springs which are bent before fixing to the spindle into the form shown. The object in both cases is to get a balance between centrifugal force and the resilience of the spring at the normal speed only, and a preponderance of one effect over the other at all other speeds. In these designs the balls are small and light and revolve at high speed.

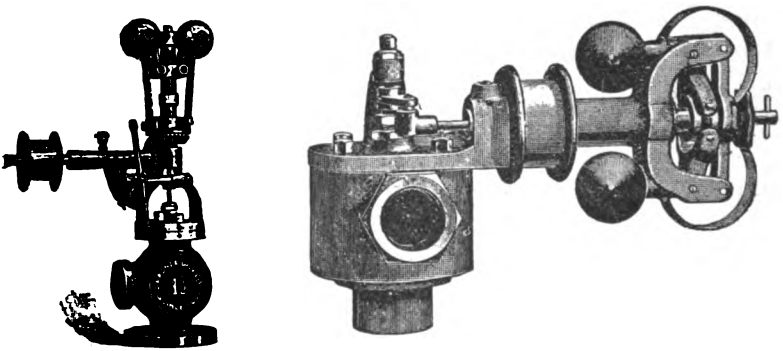

FIG. 213.

The first spring governor using an initial tension of the springs was patented by Chas. T. Porter in 1861. His claim was for the idea of giving to the spring of a centrifugal governor an initial deflection of such amount that in every position of the balls the radius of the circle described by them and the distance through which the spring is deflected shall bear a nearly constant ratio to each other.

140. Shaft-governors.—When the vertical-spindle idea is abandoned and the revolving mass is attached to the horizontal shaft of the engine so that it turns in a vertical plane, the balanced and spring principle is a necessity, and gravity must be eliminated. The methods pursued in the design of shaft-governors differ very widely, while yet possessing much in common. Two pivoted masses or weights are disposed symmetrically on the two sides of the shaft, and their ten-

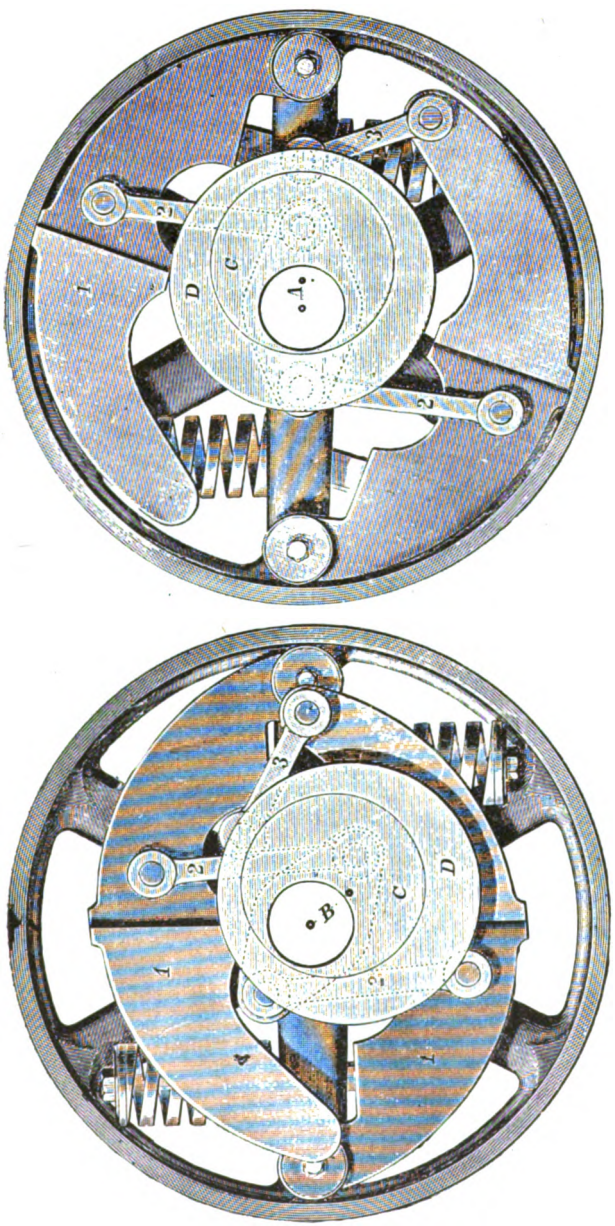

FIG. 214.

dency to fly outwards is resisted by springs either in simple spiral form or in flat-leaf form. The outward motion of the weights closes the admission-valve earlier, and the inward preponderance of the springs closes it later. Equilibrium exists only at a certain fixed speed, and that speed can be varied by varying the spring tension. Fig. 214 shows a shaft-governor of this type in its position of early cut-off on the right and latest cut-off on the left.

141. Inertia-governors.—Fig. 215 will serve as a type of the governors which are planned to produce their controlling

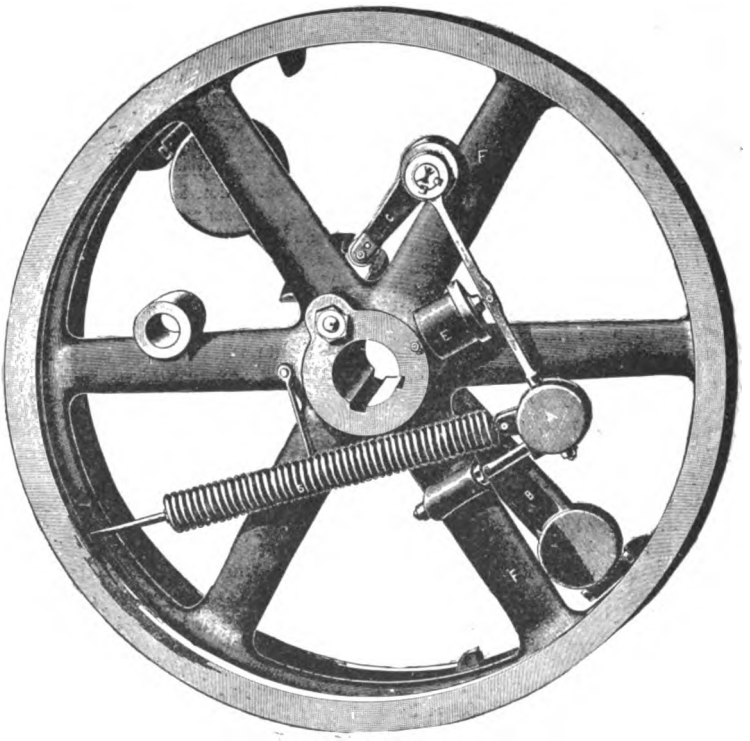

FIG. 215*b*.

effect by the change of position which will occur when a weighted lever *B*, pivoted at *P*, finds that the fly-wheel which carries it is lagging behind or overrunning the normal speed. At the normal speed a weighted lever occupies a certain posi-

tion between the stops shown in the cut in equilibrium with the spring tension, which at rest would hold it against one of them. When the load varies the speed of the fly-wheel, the revolving weights keep on at their previous speed, thus changing the relation between the lever and the fly-wheel, and adjusting the admission mechanism until the normal speed is

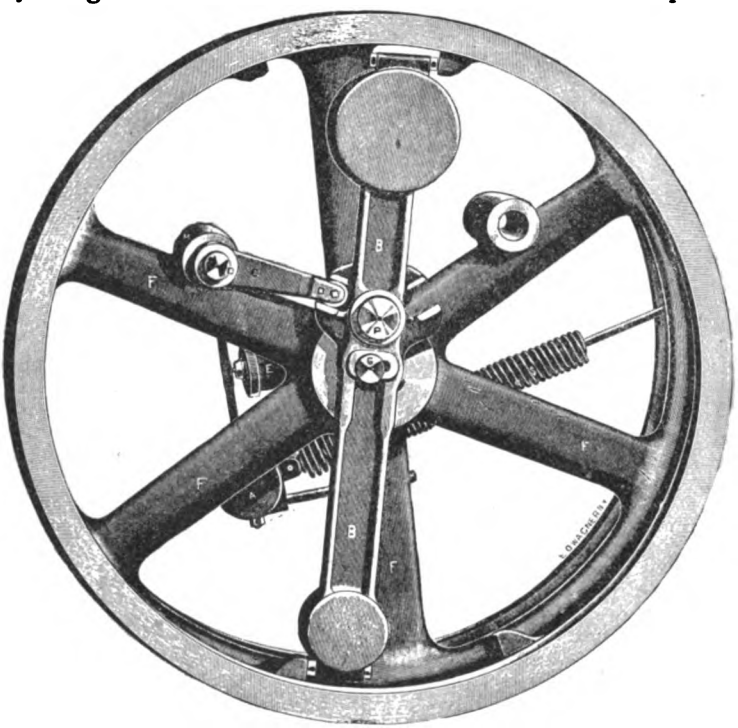

FIG. 215*a*.

regained. This can also be done by mounting the weighted arm nearer the circumference of the fly-wheel, or balancing the drag or lag of the weight due to inertia by a proper spring. Fig. 216 shows a construction of this sort.

The instability of inertia-governors, which is the consequence of their sensitiveness, makes it necessary that many of the forms should be steadied from too rapid fluctuation by dash-pots.

142. Spindle- and Shaft-governors Compared. — The shaft-governor must be a cut-off governor. The spindle-governor may be either a throttling or a cut-off governor. The shaft-governor turns at the speed of the engine, and is valuable only at high rotative speeds. The spindle-governor can turn faster than the engine if desired, and can work at low rotative speeds. In some recent designs the shaft-governor has been geared from the main shaft so as to be run at a different speed. The shaft-governor is compact, and is directly connected to the engine-shaft, and therefore prompt in action. The spindle-governor is connected either by belt or shaft to the main shaft, and a breakage of such belt or the accident of its slipping or running off its pulley permits the engine uncontrolled to run away. The balls drop as the governor ceases to turn, and the valves open wide, letting full power on the engine.

143. Resistance-governors.—The class of resistance-governors is less in use under high-speed conditions than it was when rotative speeds were low. A very successful form of such governor was one in which the opening of the throttle-valve was controlled by a rod attached to a weighted piston in a little cylinder. A small pump operated by the engine-shaft forced oil or water under this piston, while a graduated orifice permitted it to flow back into the suction of the pump. When the engine speeded up, the oil or the water was pumped into the cylinder faster than it could flow out, so that the piston was lifted and the energy reduced. When the pump and engine worked too slowly the weighted piston descended and more energy was admitted to the cylinder.

Another form of resistance-governors has a propeller-wheel revolving in oil within the cylindrical casing. The revolution of the inclined blades tends to force the propelled shaft lengthwise, and this tendency is resisted by weight or spring. When the engine speeds up above the normal, the spring is compressed and the weight lifted; and conversely, as the speed falls the weight or spring slides the shaft. Another form replaces the propeller by a paddle-wheel which turns in oil

within a ribbed casing. The paddle-wheel tends to carry the oil around with it, and the oil catching on the ribs tends to

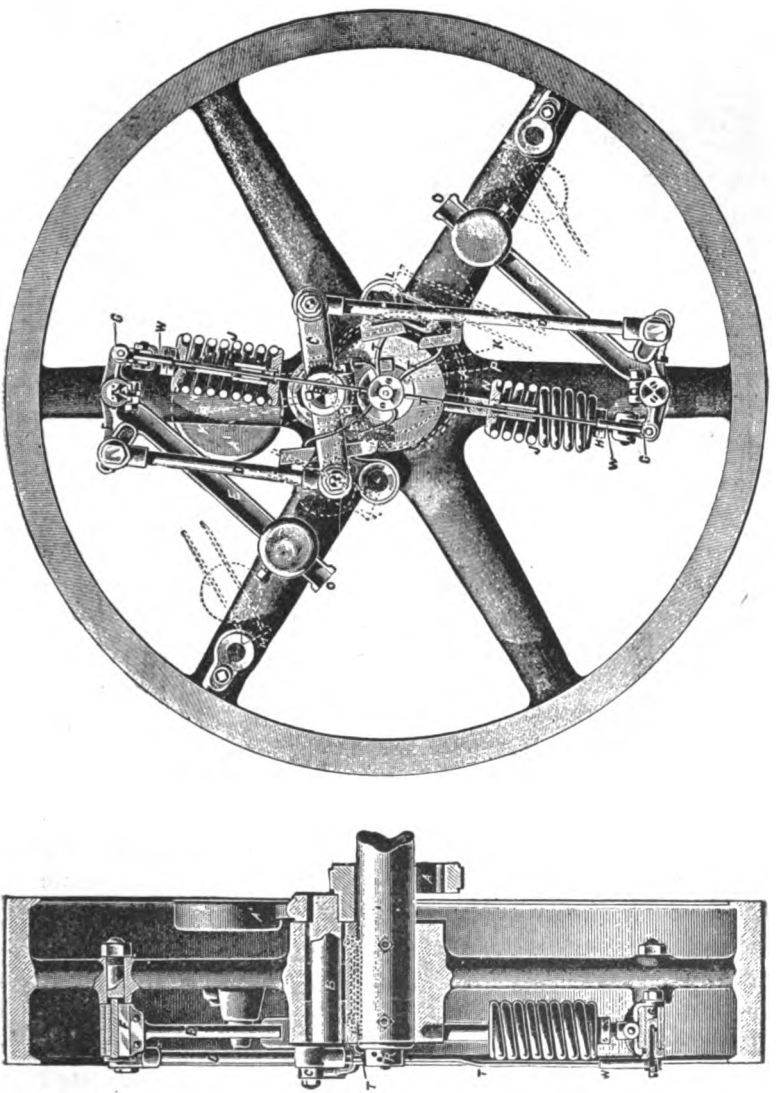

FIG. 216.

revolve the casing. This tendency is resisted by a weight acting upon an increasing leverage, so that equilibrium can only

exist at a definite speed. In these two latter forms the position of the spindle and of the casing as determined by the speed adjusts the admission of energy to the cylinder. (Fig. 218.)

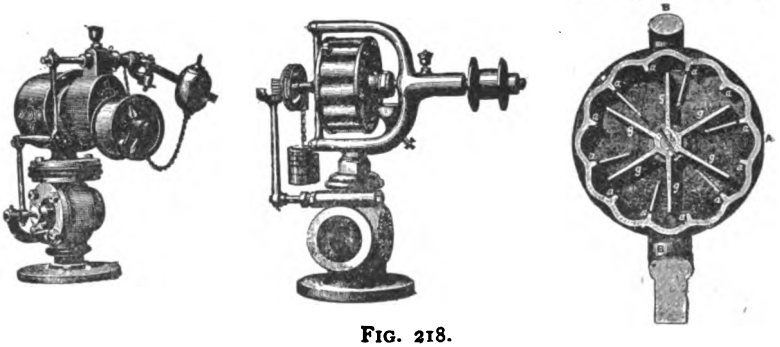

FIG. 218.

Resistance-governors are isochronous in principle, but lack sensitiveness to respond instantly to minor variations of speed. The objection to them is that they absorb continuously a certain amount of power, while in the balanced types, when no rearrangement of forces occurs, nothing but friction has to be overcome. Resistance-governors will become large in proportion as the density of the fluid decreases. This has stood in the way of attempts to make fan-governors which would revolve in the air. The superior viscosity of oil makes it a better resistance than water.

144. **Electromagnetic Governors.**—Governing devices of this sort have been applied with success in central-station work, both with steam and water as a source of motor energy, where the resistance is the generation of electric current by dynamos. In this case the speed and power of the engine are controlled directly by the resistance by simple devices. A governor of such sort consists of an electromagnet or solenoid to which current is supplied from the line wire. When the electromotive force rises beyond the normal, a motion of the armature towards the magnet takes place against the force of the weight or spring. The latter is so adjusted as to hold the armature in a fixed position at a normal speed and intensity of current. It is only necessary to connect the

armature to the valve-gearing by convenient means. When the spring is in excess there is too little current, and more energy should be admitted. When the magnet is in excess there is too much current, and the energy of the engine should be cut down. Governors of this sort will vibrate on each side of the mean intensity of the current and keep up a perpetual approach to isochronism.

145. Dynamometric Governors.—Designers of governor appliances for their engines have sought to make the resistance control the effort in the cylinder directly, and without having to make use of variation of speed indirectly to control the effort. While the electromagnetic governors just discussed (par. 144) belong to this class in one sense, they are indirect methods except where the work of the engine is the generation of electric energy. The best known attempt to solve this problem directly was to make the belt-wheel a sort of transmission-dynamometer. The belt-wheel was not keyed to the shaft, but was driven by the latter through a second wheel whose arms were connected to the arms of the belt-wheel by means of springs. It is obvious that with a given resistance in pounds on the belt-wheel the two sets of arms would separate until the stress in the springs balanced the resistance. From that time on the two wheels would remain in the same relative position until there was a change in the resistance, to which the springs would instantly respond and produce a new relation of position. The change in the angle between the driving arm on the shaft and the driven arm of the belt-wheel was made to vary the admission, so that the energy of the cylinder varied directly as the load. Such a governor was properly called a "weigh the load" governor. The difficulty connected with it and with the other governors by which the same object has been sought has been that the adjustment of the valves could not be controlled within sufficiently narrow limits. Even with dash-pots to deaden the oscillation it has not been convenient to secure isochronism of the engine. It was hypersensitive, and adjusted the valve-gear through a wider range than actual variation in the load required.

146. Safety-stops.—It will have been noticed from the preceding that in the case of fly-ball governors the fall or drop of balls in gravity types and the drawing in of the balls in spring types are the motions by which the valves are opened wide. This fall or drop of balls will happen in belted governors when the belt runs off and breaks. As soon as the engine is released from the control of the governor, and the latter from its position admits the maximum energy to the cylinder, the engine runs away, with probable disaster in its train. To diminish this danger many forms of governors have attachments which are called safety-stops. Their object is to close the valve controlled by the governor when the latter shall have lost its normal action by some breakage so that the balls fall. They are of two kinds, mechanical and electrical. In the mechanical safety-stops the usual underlying principle is to have a detent or trip which the governor in its normal position does not touch, but which will be released should the drop of the balls permit the descent of a rod or lever to its lowest point. Such drop of the balls will release the detent, which shall permit the action of a spring or weight powerful enough to close the valve when thus released. In many constructions the setting of the weight or spring and its catching by the detent will be done by hand after the engine has reached its normal speed and the rotation of the balls has lifted the tripping-rod out of the way. In another form the spring is set by a ratchet motion, so that it sets itself after the normal speed is reached.

The electrical safety-stops usually act in essentially the same way, but the convenience for the transmission of power which is offered by electric methods permits their functions to be extended. A very practical form of electrical safety-stop has a weight or spring powerful enough when released to force the balls to the top of their range, and close off admission to the cylinder. This weight or spring is held out of action by a detent attached to the armature of an electromagnet. The armature may be held away from the magnet with a spring of graduated force, so that the normal current in the coil shall not be able to draw the armature to the magnet and

thus release the weight. Overspeed, exciting the magnet beyond the equilibrium-point, will release the detent, releasing the weight and throwing the governor-balls up. This same result can be attained by differential currents. A convenient and useful extension of this idea has been to connect the releasing detent by buttons or switches to different rooms or departments. In case of accident in such department, by pressing the button or throwing the switch the weight controlling the governor-ball would be at once released and the driving-engine would be stopped.

Automatism with instantaneous action is a prime requisite of such devices, and it is very desirable that they should not have to depend upon the setting or memory of the engine-runner to be made ready.

147. Marine-engine Governors.—The locomotive and the traction engine commonly use no governor. Their resistance does not vary suddenly, and a human intelligence must always be at hand to control them in any case. In marine engines, however, while in smooth waters the same condition prevails, in rough weather the pitching of the vessel may release the screw from its resisting medium and suddenly take the load off the engine. Obviously this is a source of danger both to the long and flexible shaft and to the screw itself when it suddenly re-enters the water while moving at too great velocity. Many marine engineers prefer to meet this difficulty by keeping one of their staff continually at the throttle-valve in bad weather, and no form of revolving governor exactly meets the case. Some of the shaft-governors operating by springs independently of gravity would meet the case most nearly, but for the size of the engines in question and the increased complications and weight which would be introduced. A form of marine governor which has been introduced in many marine engines is a species of pendulum arrangement operating a valve in the steam-pipe. Fig. 219 shows a general detail of such a device. When the vessel is on an even keel, the pendulum attached to a spherical casing hangs vertically, and all steam-openings coincide so as to leave free passage from boiler to engine. As the ship pitches

it changes the angle of the steam-pipe, to which a fixed casing is attached, while the pendulum-ball remains vertical. The effect of this pitch or send of the ship slides the openings past each other, and throttles the passage for steam to the engine. If the pitch is enough to send the openings past each other, no steam

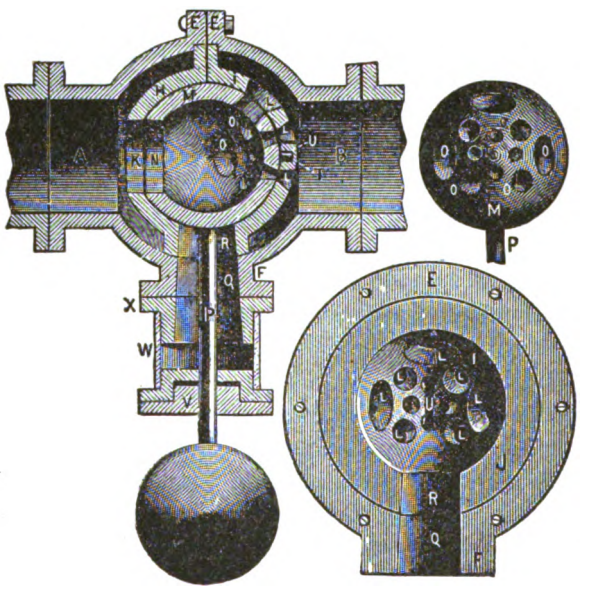

FIG. 219.

can get through. The pendulum swings steam-tight by means of flexible or spherical joints at the opening through which it protrudes. Most engineers even with such a governor attached to their engines do not relax their vigilance at the throttle.

148. Connections of the Governor to Control the Engine.—The student is referred to the discussion in Chapters VI and XII for the methods which may be used to make the governor in any of its forms control the speed and energy of the engine. The number of combinations possible is very great, since almost any kind of governor can be applied to produce variation in the point of cut-off by the methods discussed in Chapter XII. The methods for hand-adjustment of such variation are usually made automatic by properly gearing the governor mechanism to the mechanism which operates the valves.

CHAPTER XIV.

ENGINE FOUNDATIONS AND BED-PLATES.

149. Introductory.—In the chapters which have preceded, the general features of the steam-engine have been examined in their relation to the steam-engine as an appliance for bringing the expansive force of steam to produce a regulated motion. This discussion of the subject rests directly upon the underlying general principles of science, and is independent of much which belongs to detailed construction. This discussion belongs, therefore, to the professional side of steam-engine construction, rather than to steam construction as an art. In the chapters which follow the practical details of the construction of a number of types has to be included. It will be sought to cover as wide a field of practice as space will permit, with the view to familiarizing the reader with successful and standard details of engine-building. The underlying principles of the treatment will be to imagine an engine delivered to the power plant disconnected and in parts, and a clinical discussion is to be held upon each part as the engine is assembled in its place and made ready to be run.

150. The Bed-plate of a Horizontal Engine.—It will be recalled that the typical power-plant engine consists of a bed-plate (par. 11) to which, as the fixed link of a chain of mechanism, all other parts of the engine are attached. To this bed-plate the cylinder will be attached at one end and the revolving shaft at the other, while the guiding and transforming mechanism must be steadied and aligned by it. This bed-plate will therefore be a mass of metal of sufficient weight and strength to take care of the forces at play in the mechan-

ism without springing or distortion. Since weight is no objection in stationary engines, but is rather an advantage, it will be found that cast iron is much the most usual material for bed-plates in such engines. In the locomotive, on the other hand, wrought-iron forgings form the bed-plate or frame, and for marine engines steel castings or a combination of castings and forgings have been much used recently.

The bed-plate of a vertical-cylinder beam-engine, such as is usual in river-boat practice, is often called the sole-plate.

The ordinary bed-plate of a horizontal engine appears in a comparatively small number of typical designs. Historically an early type is known as a tank or box bed-plate. It consists essentially of a box very much longer than it is wide, without top and often without bottom. The sides are made up of a combination of mouldings, and the top of the sides is formed into wide flanges upon whose upper surface are bolted the cylinder and guides and the crank-bearing of the shaft. The space between the sides gives room for the motion of crank and connecting-rod. It doubtless received its name from the practice with condensing engines of utilizing the area below the cylinder and mechanism to accommodate the tanks used for the hot or the cold well (par. 50). Fig. 225 shows a tank bed-plate of the ordinary type. It may also derive its name from its resemblance to a cast-iron trough.

An improvement upon the tank bed-plate seeks to dispose of the metal required in a bed-plate more economically in the line of the stresses. It appears in many forms identified with the names of a number of various builders. That which is usually identified with the name of Corliss in America transforms the bed-plate into a brace between the two independent castings of the crank-bearing and cylinder. Each of these has its own supporting foot or pedestal, and the bed is a casting bolted to each, and either not supported by any contact with the foundation or by a central foot only. This form of bed-plate is sometimes called the girder bed-plate because the shape of the brace, in order to resist the strains upon it, becomes that of an I in both the vertical and in the

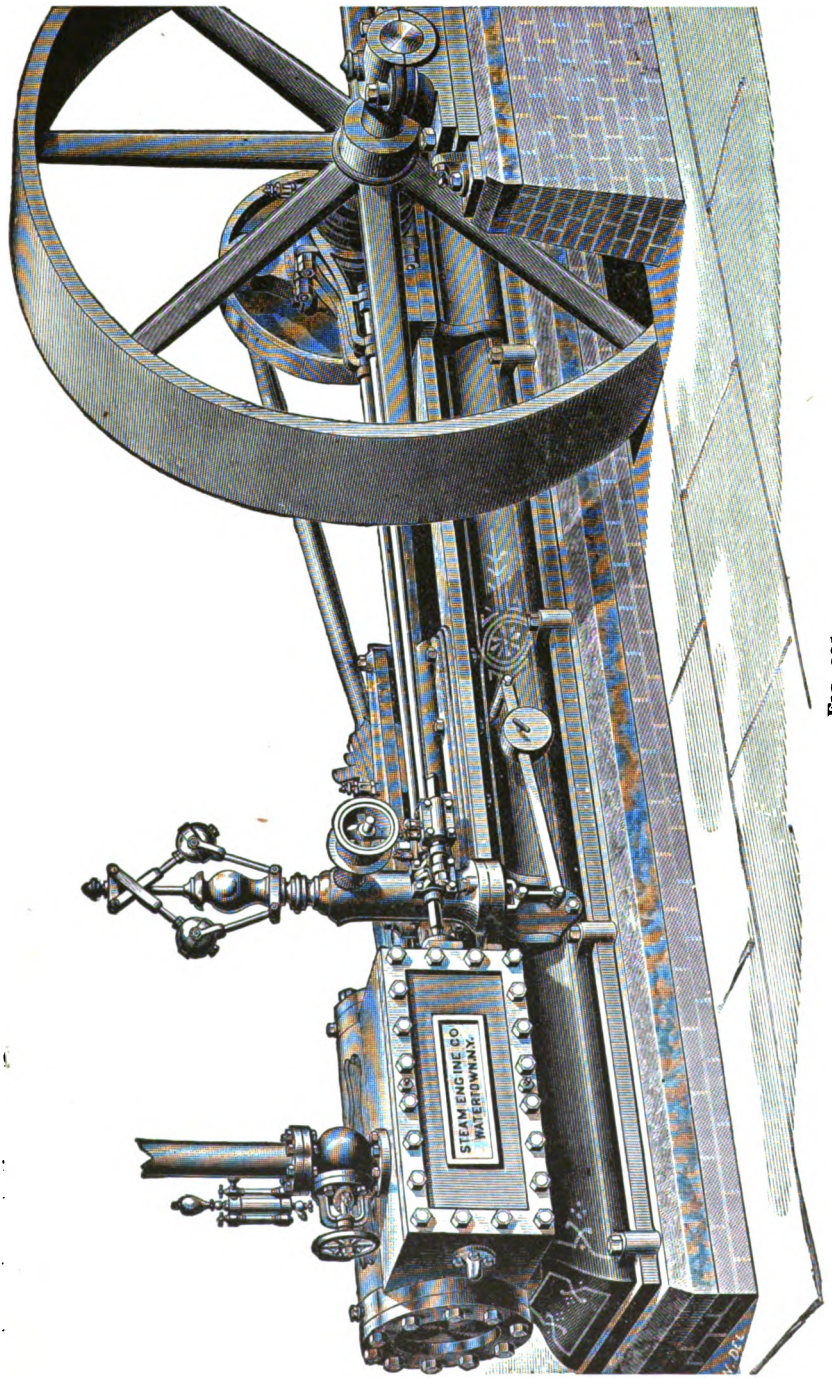

FIG. 225.

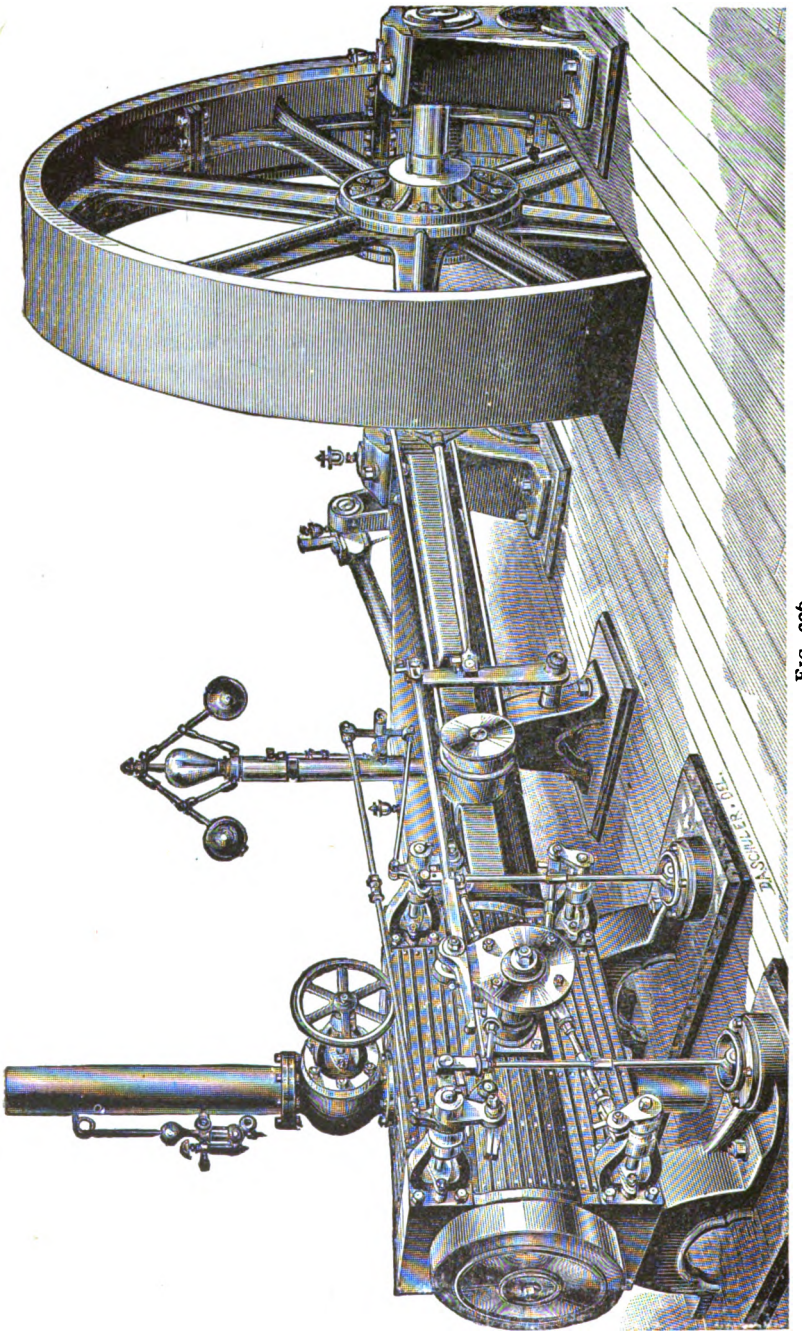

FIG. 226.

horizontal plane. Fig. 226 represents a standard bed-plate of this type, and Fig. 227 shows a section through the girder (see Fig. 182 also).

A modification of the Corliss bed-plate is identified with the name of Tangye of England, in which the cylinder overhangs the end of the bed-plate proper without a supporting pedestal or foot. This gives to the bed-plate its greatest

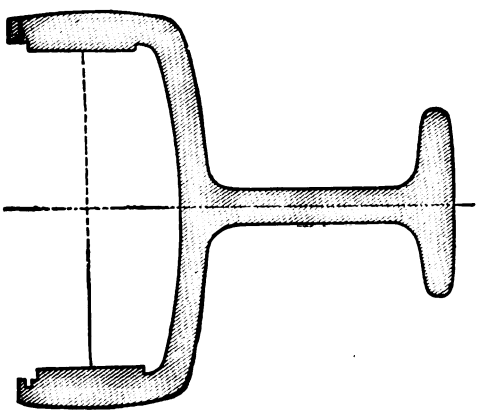

FIG. 227.

mass around the guides, and the crank end is moulded with easy curves to clear the space required for the motion of the crank and connecting-rod. Fig. 228 may stand for this design as well as Figs. 92, 95, and others. The advantage of the Tangye (sometimes also called the Porter) bed-plate is the convenience of having the bottom of the cylinder exposed beyond the foundation, to take the exhaust-pipe or drip to a point into which water will naturally gravitate. Furthermore, the cylinder is free to expand with heat all in one direction, without producing a tendency to flex or distort the bed-plate.

The Tangye and Corliss bed-plate designs are susceptible of combination or modification almost indefinitely. Fig. 1 shows such combination, and it will be found a feature of other types illustrated. The "straight line" engine (Fig. 229)

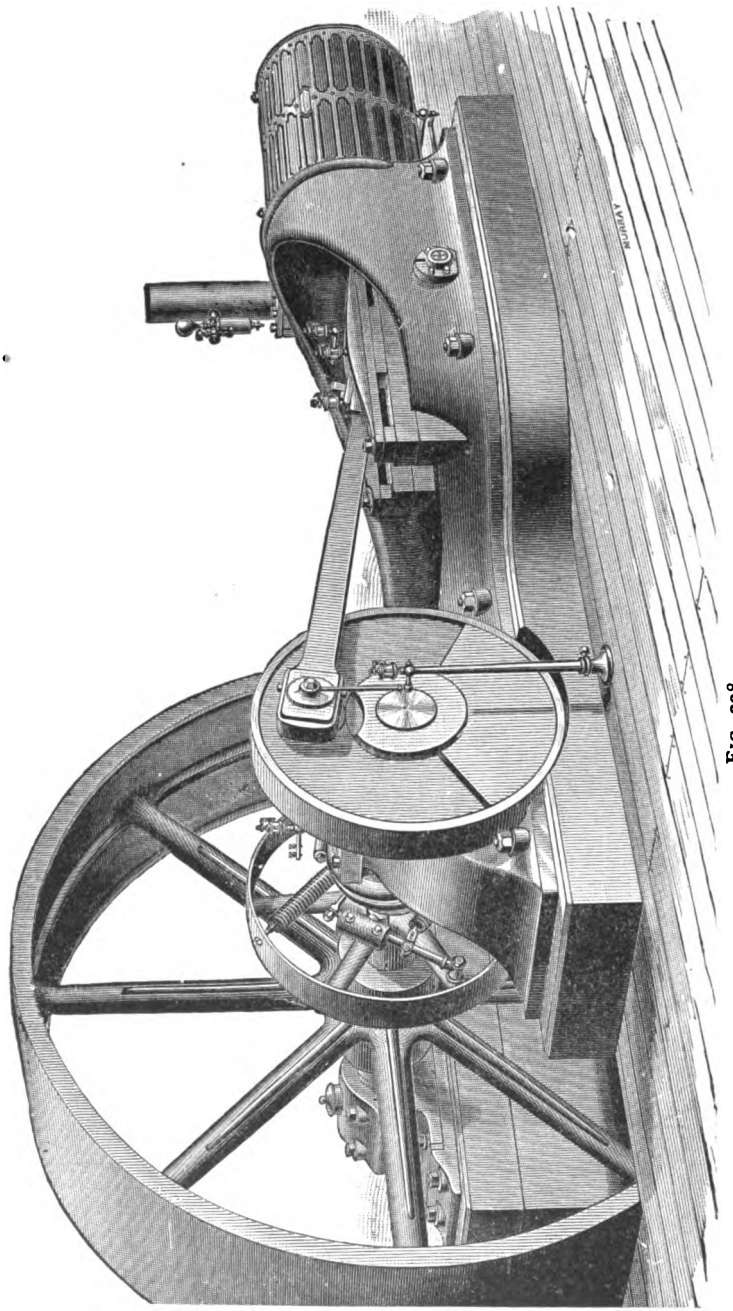

FIG. 228.

carries the principle of permitted expansion to its logical end by having the crank-bearings tied to the cylinder by straight-line braces bolted to both, but the cylinder is not fastened to the foot which supports it, but simply rests upon a bearing-surface. The engine can be designed to have all components downwards upon the pedestal in the absence of rigid connections, which removes the tendency to distort in expanding.

151. The Bed or Frame of a Vertical Engine.—It has been seen (pars. 17 to 19) that the vertical engine has the cylinder almost always over the shaft. Hence the frame becomes a proper casting to carry the crank-shaft from which a suitable columnar structure shall arise to carry the weight of the cylinder and serve also to guide the cross-head. The general appearance of these columnar castings in the usual marine engine has given them the name of A frame (Fig. 18). In recent designs, to secure greater accessibility for the mechanism one side of such frames is made of hollow steel columns or rods, such as are fitted on the engine shown in Figs. 15, 17 and 53. Accessibility is a prime necessity of good design for vertical engines of this class, and is much better secured with such open frames.

In beam-engines the bearing for the beam requires to be so designed as to keep satisfactory alignment. In early designs it will be found to resemble a massive column or pillar (Figs. 60 and 91); in later engines a nearer approach has been made to the A frame or gallows-frame usual in river-boat practice. The gallows-frame in recent large engines is made of steel plate moulded into box-girder shape and strongly braced.

The weight and strength of bed-plates of cast iron is rarely made a matter of calculation. To make it more than heavy enough and to dispose the metal in it in forms pleasing to the eye, which secures solidity and grace combined in a design, have been the objects which will be apparent from the study of successful practice. It is desired that the mass of metal in the bed-plate be sufficient to absorb by its inertia the effect of forces suddenly applied in the cylinder or suddenly

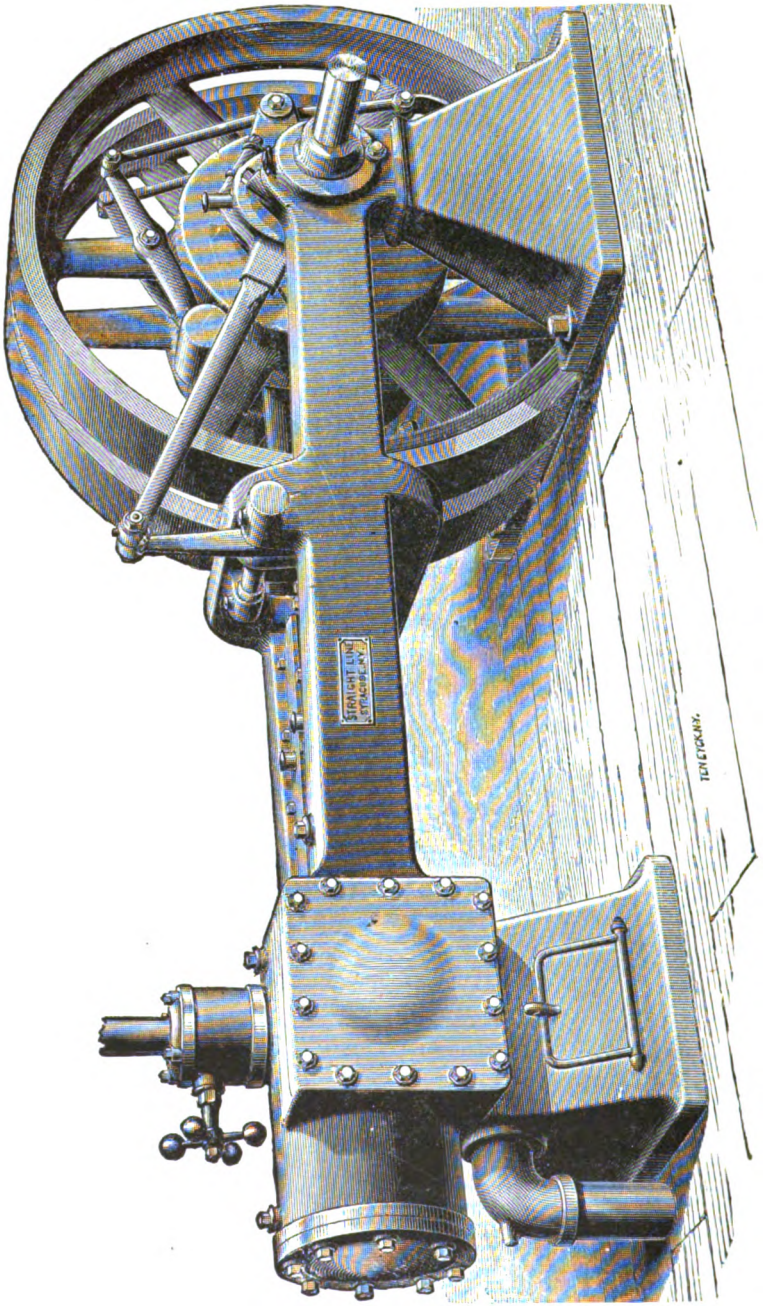

FIG. 229.

Digitized by Google

to be arrested at the crank-pin. The effect of these is like a blow of some intensity, and there should be mass enough in the bed-plate to have it serve the purpose of an anvil. When there is sufficient mass in the bed-plate, it will absorb vibrations caused by unbalanced forces in action in the mechanism and prevent their reaching either the ground, the foundation, or the material by which they might be transmitted. If the bed-plate proper were of sufficient mass, the engine would not need to be secured to a massive foundation, but could stand on simple blocks adequate to support its weight. It is an old rule that the anvil should have a mass ten times that of the hammer-head which strikes on it. It is almost impossible to make the bed-plate of the stationary engine too massive.

152. The Foundation of an Engine.—It is possible to make the bed-plate of an engine massive enough to make any other foundation unnecessary. It is not usual, however, to do this, because there are other purposes served by a proper foundation outside of that of absorbing the action of forces in the engine mechanism. Sometimes below the bed-plate proper a surbase of cast iron is used to which the bed-plate is bolted, and which in turn is secured to the foundation. It is more usual to have the bed-plate rest directly on the foundation. The functions of an engine-foundation are threefold.

1. To support the concentrated weight of the engine upon the ground by distributing that weight over a sufficient area to prevent settling. Accepted figures for the supporting power of different soils are given in the following table:

Alluvial soil.....	from .5	to	1	ton per	square foot.
Clay, soft	" 1	"	1.5	"	"
" dry.....	" 2	"	4	"	"
" thick	" 4	"	6	"	"
Sand, clean dry.....	" 2	"	4	"	"
" compact.....	" 4	"	8	"	"

Gravel and coarse sand, from 4 to 8 tons per square foot if protected from water.

Hard rock, up to 200 tons per square foot in thick strata.

If the soil is so unreliable as to require piling, crib work, and other artificial underpinning, the student is referred to text-books which make a specialty of foundations.

2. The engine-foundation must go deep enough or far enough below the surface to be beyond the effects which cause unequal settling either from frost, vibrations, or the influence of loads borne by adjacent ground. The depth below the surface desirable for an engine-foundation will vary, but it is rarely safe to permit less than three feet of foundation below the general level. In excessive cold and in exposed situations the effect of frost will be felt down to six feet below the general level.

3. The engine-foundation should have mass and weight sufficient to hold the engine still against unbalanced forces. It will be readily seen that in the case of a high-speed engine the weight of piston, rod, cross-head, and part of the connecting-rod have to be started and stopped many times a minute. The pressure due to this comes upon the piston, but the cylinder-head and cover has an equal pressure to force it the other way. At the end of the stroke the living force of this same mass has to be arrested. This can be done by steam (pars. 88 and 90), or the crank-pin may have this work to do. If the steam does it, the reaction comes in the cylinder-cover and tends to slide it lengthwise; and if the crank-pin is to do it, it is desirable to balance the weights of these reciprocating parts by a weight opposite the crank-pin which shall provide for a storage of energy to be given out at the shaft in a direction opposite to that of the reciprocating parts and equalize their effect in jerking or jarring the shaft. The locomotive engine presents in its usual design a striking illustration of the counterbalancing of a reciprocating weight by a revolving weight between the spokes of its driving-wheels. It is possible by carefully proportioning the weight and acceleration which belong to the reciprocating parts to equalize in a great degree the shocks upon the crank-pin when the strains reverse, but a necessity for strength precludes the use of very light weights for these parts, and nearly all engines

are counterbalanced to secure quiet and steady running. The presence of the revolving counterbalance either in the crank or in the fly-wheel throws the engine-shaft out of balance, since there is weight on one side which has no equivalent weight symmetrical to it. While, therefore, the engine has been balanced in one direction, it has been thrown out of balance in the plane at right angles by reason of this counterbalance. The designer must therefore select in which plane he will have the engine balanced. In horizontal engines it is much more convenient to balance the engine in the horizontal plane, so that it shall have no tendency to slide lengthwise upon its supports. By doing this with a revolving counterbalance there has been introduced a force which tends to lift the engine and cause it to vibrate up and down. The weight or mass of the foundation must be sufficient to hold the engine down against the action of such forces. In vertical engines the sliding tendency in a horizontal plane is also the one to be counterbalanced, and the foundation must absorb in such an engine the vertical forces which play in a plane parallel to the cylinder-axis (see par. 33).

4. The engine-foundation must furnish sufficient mass to absorb vibration if the bed-plate is not massive enough to do it alone. The foundation being made up of masonry is easily and conveniently built up in place, while to make a massive casting would not only be more costly per cubic foot, but would make weights of such magnitude that handling would be troublesome.

When the foundation rests on rock and is not sufficiently massive it has been found that the vibrations caused by reactions in the engine are transmitted almost perfectly to the adjoining foundation upon the same rock. Great care has to be observed to attain success.

153. **Construction of Engine-foundations.**—The foundations for very large engines will be of cut or dressed masonry according to the usual specifications for first-class masonry. Where the importance of the structure warrant it, tunnels or thoroughfares will be made or left through the mass of the

foundation by which access may be had to the lower ends of the bolts by which the bed-plate is bolted to the masonry (Fig. 230).

For small engines, footings of rough masonry or ashlar may be used to distribute the pressure, and on this footing the foundation proper of brick will be built. The third plan is to make the foundation a monolith of concrete. Upon a proper footing to distribute the weight, a box of rough boards without top or bottom is laid, and within it successive layers of cement concrete are thrown in and well rammed until the desired height is reached. When brick is used it should be of first quality, hand-burned, and laid in cement-mortar. Common lime-mortar is liable to crumble and disintegrate under vibration, and the whole principle of the foundation is to have it act as a solid mass. When appearance is to be considered, the face of the brick foundation may be made of face or Philadelphia brick, while the interior is of ordinary grades. Since the bed-plate is to be bolted to the foundation, the greatest care must be observed in locating the necessary bolts in their proper places.

154. Footings to Prevent Vibration.—The mass which it is convenient to get in a vertical engine bed-plate is often not enough to provide for the absorption of all vibration. The vertical engine, when chosen because floor-space is to be saved, does not call for extended area in the foundation, so that sufficient mass can only be gotten by going deep. Where this is inconvenient, or where rock is struck, engineers have had to provide special footings to arrest vibration. It has been tried by some to underlay the foundation proper with timber or rubber, but a springing material of a class to which these belong is often the occasion which causes the very difficulties they are designed to prevent.

Vibration of machinery or any solid substance is of two sorts: the material either swings crosswise as in the vibrating string of a musical instrument or in a flapping belt, or the motion of the particles is lengthwise or parallel to their long axis. If the oscillation or vibrating period of the material

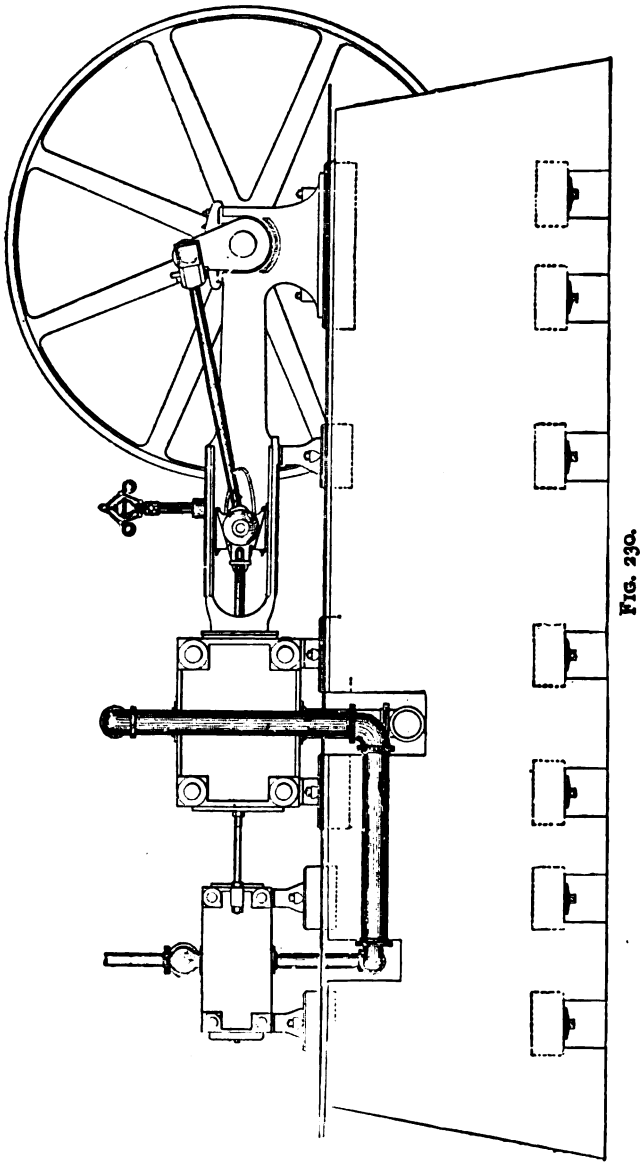

FIG. 230.

used as an absorber of vibration happens to coincide with the vibration period caused in the engine-frame by the speed of reciprocation or by the belt-flap, the deadener partakes, and multiplies the objectionable vibration. What is to be sought to deaden vibration and arrest its transmission is some material to underlie the foundation which shall be without any resilience whatever.

Probably no better material is to be found for the purpose of stopping vibration than sand, if it can be kept dry and all motion prevented, and the foundation-block itself is of sufficient mass. The foundation-pit is dug two or three feet deeper and two or three feet wider on all sides than the foundation proper is to be. This pit is surrounded with proper sheathing to prevent the displacement of the sand, which is filled in two or three feet below the bottom of the foundation, and then around it on the sides as it is built up. Hair-felt or mineral-wool layers have been used underneath the footing-course. If the foundation-block is not massive enough, these methods or expedients only aggravate the difficulty which they are intended to cure. Very satisfactory results have been obtained abroad from the use of asphaltic concrete for massive footings. It possesses a certain sort of elasticity with its massive character, and its period of vibration is so definite and so much shorter than the period of the engine's vibrations that the latter are broken up and neutralized before they reach the transmitting rock or hard-pan.

Most annoying vibrations are caused in high-speed engines by the impact of steam in an exhaust-pipe with elbows. The difficulty is intensified when there are water or oil drops in the exhaust current. Their impact against the elbow which deflects them will set lengths of pipe atremble, and their motion will be transmitted over a very extensive area.

155. Foundation-bolts.—The bed-plate requires to be strongly and stiffly secured to the foundation in order that the latter may act with the bed-plate as one mass, and to prevent the bed-plate from moving upon the foundation. These bolts will vary in size with the size of the engine, but

it is very undesirable to use bolts of such small diameter that it can be possible to twist them off with any ordinary wrench. Common diameters of bolts for engines of medium size would be from 1⅛ to 1½ inches diameter. The largest engines will require 2-inch bolts, but the smallest would use ¾-inch. The length of these bolts will be determined by convenience. It is desirable to have them go a good ways down into the foundation, if not all the way to the bottom, in order that the upward strain upon them may be widely distributed in the foundation.

The location of these bolts in the foundation must be determined by the holes in the bed-plate through which they have to pass. It will be seen by examining typical bed-plates that as a general rule there are bolts at the cylinder end, or in the feet, and bolts at the crank-shaft end (Fig. 230). The bolts, furthermore, have to be built into the foundation,

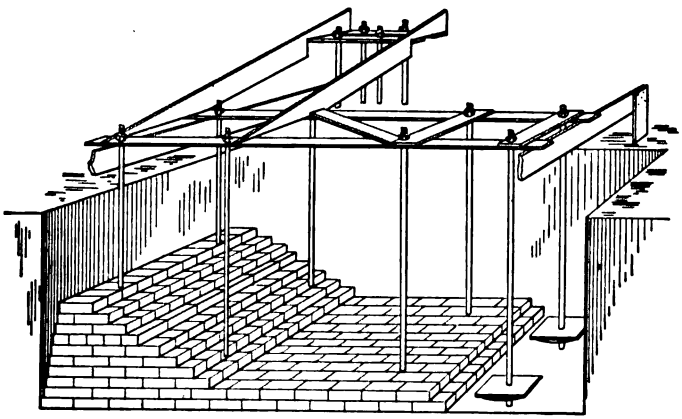

FIG. 231.

and at such a height that when the foundation is completed, and the bed-plate placed upon it, the upper end of the bolts shall protrude through the holes in the bed-plate enough to take the nut which these upper ends are to carry.

The method used to secure this object is shown in Fig. 231, which presents a typical arrangement for this purpose. The

wooden frame is called a template. It has holes made through it at points which correspond to the holes in the bed-plate, and when the nuts are in place on the upper end of the bolts the template is adjusted to the proper height above the datum plane, or plane of reference, and the foundation is built around the hanging bolts. The lower ends of the bolts are fitted with thread and nuts, on top of which rest the bearing or distributing plates or washers of cast or wrought iron. The distributing-plate is to enable the effort of the bolt to be borne by a number of bricks without danger of pulling through, and the nut and thread permit a vertical adjustment of the bearing-plate so that it shall come at the under surface of a joint in the coursed masonry. To permit of a certain limited horizontal adjustment of these foundation-bolts, several builders have surrounded the bolts with a length of pipe reaching from the bearing-plate to the top of the masonry. The diameter of this pipe is so chosen that the bolt can be deflected within the hole which the pipe makes, and, after the bolt is in place and the alignment completed, the space between the bolt and the pipe is filled with cement and the position of the bolt is fixed. The template in Fig. 231 shows the bolts required for the outer bearing of the engine-shaft attached to the principal template. This is usual when drawings of the template are furnished by the engine-builder and it is desired to make the foundation all in one piece. Where the length of the engine-shaft makes it desirable to have a separate foundation for this outer bearing it is usually more convenient to work with an independent template.

156. Alignment of Foundation-template.—The foundation-bolts of the bed-plate will bear a certain relation to the axis of the cylinder. The axis of the cylinder should be in a plane truly at right angles with the axis of the engine-shaft. If the engine-shaft is to drive a line-shaft by belting or gearing, these two shafts should be truly parallel. Hence it is of prime importance to have the cylinder-axis perpendicular to the line of shafting, and the template which carries the bolts must be very carefully placed or oriented with respect to these

determining lines. The drawing furnished by the builder of the engine from which the template is to be made usually has on it the centre-line of the cylinder, so that it can be laid out upon the boards of the template.

For the obtaining of the vertical plane through the cylinder-axis a line stretched over the foundation-pit and carried to suspended plumb-bobs is the usual device. For laying off the centre-line of shafting or wall-lines the expedient of snapping a chalk-line upon the floor is the most convenient. The centres of the shaft are transferred to the floor by plumb-lines, or offsets may be taken from permanent walls. Such centre-lines having been established, the plane at right angles to it is established by points and lines using either a transit with graduated horizontal limb and making repeated readings, or by the ordinary geometric methods, or by the use of a massive T square whose head and blade exceed six feet in length and whose squareness has been carefully verified.

If a pulley or belt-wheel has been placed upon the line-shaft to which it is desired to draw a perpendicular line, a most convenient method is to stretch a twine or fine wire across the diameter of the pulley as nearly as the shaft will permit. With pulleys which have been turned, the edges of the face determine a plane perpendicular to the axis, so that the tense string touching the face at one point will only touch the face at a point on the other side of the shaft when the further end of the string lies in a plane which is perpendicular to the axis. This same method is a very convenient one to extend for the purpose of bringing two shafts parallel to each other where both carry pulleys.

157. Locating the Bed-plate on the Foundation.—The foundation being completed, the bed-plate is to be lifted upon it and dropped into place with the bolts passing up through the holes in the bed-plate. Where cranes or similar lifting appliances are a feature of the power-house equipment this process becomes simple. In their absence the bed-plate must be lifted by jacks and blocking high enough to clear the bolts.

It must then be rolled on skids into place, and then lowered by the successive withdrawing of the blocking.

The masons or bricklayers who have built the foundation do not usually have appliances for working to as close dimensions or as accurate levels as the setting of the engine requires. Furthermore, the top of the foundation is rarely a true plane, while the bottom of the bed-plate is very nearly a plane as a rule. It is necessary, therefore, to make a joint between the bed-plate and the masonry-work which shall support the bed-plate all over and in a plane as nearly level as it can be made. This process is so much easier when the brickwork or jointed masonry is covered by a single flat cap-stone, that where the dimensions of the foundation permit its use it will be preferred. It is usually a sawed or planed slab of bluestone or flagstone from four to six inches thick, and a little larger than the foundation-pier to which it serves as a finish or coping. The holes for the foundation-bolts have to be drilled in it, and it is lowered to its place upon a good bedding of cement. In the absence of such a cap or coping the bearing of the bed-plate comes upon a surface which is full of joints. The bed-plate is lowered over the foundation-bolts, and rests upon thin flat shims, or wedges of metal, which are placed on each side of the bolts between the bed-plate and the foundation. The nuts of the bolts are then screwed home, compressing the shims, while the bed-plate is carefully levelled as the strain is taken at each bolt. By driving in or loosening the shims any distortion or warping of the bed-plate by the bolts is prevented, and the bolts are tightened home until they refuse to go further.

The bed-plate is now rigidly bolted to the foundation and rests upon a number of points in a plane. Between the bed-plate and the foundation is a place between the shims equal to their thickness, and this joint requires to be filled. The materials used for this purpose in setting a bed-plate and making the joint are five. They are methods applicable to the setting of any machinery.

1. Shredded oakum may be driven into the joint with a

chisel, as the seams of wooden vessels used to be calked. This makes an elastic sort of joint, but it lacks permanency.

2. Felted hair is used in the same way and has the same properties.

3. A rust-joint, as it is called, may be used. This is made by taking a thin cement-grout into which cast-iron borings or chips are introduced with a little powdered sal ammoniac and flour of sulphur. A dam of putty or clay is made around the outside of the bed-plate, and this mixture run into the joint and well worked in with a trowel. The rusting metal unites the mixture to the iron, and the cement to the stone.

4. The sulphur-joint. This is one of the most widely used methods for bedding the engine. A clay or putty dam is made around the bed-plate, and the ordinary roll sulphur melted in an old kettle and poured into the joint between the bed and the masonry. It expands on solidification somewhat like ice to fill every interstice and give full support to the bed-plate. It undergoes no deterioration from oil or vibration. If care is not taken in melting the sulphur, it will become too hot and begin to oxidize, giving off an irrespirable gas. Sulphur in melting becomes fluid at a comparatively low temperature, becomes more viscid as the temperature rises, and passes to a second fluidity just before it is ready to burn.

5. The type-metal joint. Advantage is taken of the property possessed by certain antimony alloys (such as Babbitt, type-metal, etc.) of expanding at the moment of solidification to use them for bedding or jointing bed-plates. The method of using them is the same as that practised with sulphur, and they are preferred by many engineers particularly for bedding the narrow feet used with Corliss bed-plates.

158. Alignment of Outer Pillow-block or Shaft-bearing.—It will have been observed in many of the engines which have been illustrated that the crank-shaft has a bearing on each side of the crank-pin and connecting-rod. Such engines are called centre-crank engines. The two bearings for the shaft are on the bed-plate, and the fly-wheels overhang their

bearings. Figs. 92, 93, and 229 illustrate engines of this type. Side-crank engines, on the other hand, have a shaft bearing behind one crank on the bed-plate, but the outer end of the shaft requires an independent bearing. The fly-wheel or belt-wheel or both will usually be upon the length of the shaft between these two bearings. (Fig. 226.)

It will be seen at once that the location of this outer bearing is of vital importance. In smaller engines it can be provided for approximately by the template as shown in Fig. 231, but for large engines and for its final adjustments in small engines a different method should be used.

If the outer bearing is too high or too low, it will force the crank to revolve in a plane making an angle with the true vertical plane, and twist the connecting-rod in each stroke. If out of place in a horizontal plane while correctly located in a vertical plane, it will force the crank to revolve in a plane which makes an angle with the axis of the cylinder, in which case it will bend the connecting-rod in each stroke; or it may be out of place in both planes, so that the connecting-rod will be both twisted and bent. The effect of either or both errors of alignment of this outer bearing is to wear the crank-pin out of its cylindrical shape, and to cause a knock or pound, and heating at the joint, which no adjustment of these bearings will cure. The proper method of aligning the outer bearing involves, first, the establishment of the true axis of the cylinder after the bed-plate is in place and the foundation-joint complete. This is best done by stretching a fine piano-wire through the empty cylinder, carefully adjusting it to the centre of the bore and fastening it tightly stretched to walls or fixed objects. To get the wire central is a matter of painstaking care and trial with gauges of wood or metal whose length is the cylinder-radius. The axis of the cylinder being established, the shaft and crank are put in place in the bearing on the bed while the outer bearing is provisionally supported and located. The shaft is then turned until the crank coming towards its inner dead-centre touches the wire which marks the prolongation of the cylinder-axis. It will touch it at a

certain distance from the end of the crank-pin and from one of its collars. (Fig. 2.) The shaft is then turned over until the crank-pin approaching its outer dead-centre touches the wire. It will only touch it at an equal distance from its end or some fixed collar if the shaft is revolving around an axis truly at right angles to the wire. The outer bearing should be adjusted horizontally until the wire cuts the crank-pin at the same point and in the same plane on its outer and inner centres.

The adjustment of the horizontal plane may be effected by a sensitive level if the engine has also been levelled in the

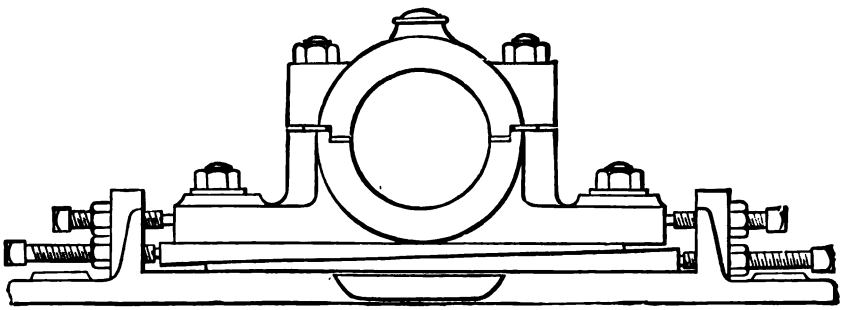

FIG. 232.

plane at right angles to the cylinder-axis in setting upon the foundation. A more sensitive and satisfactory vertical adjustment of the outer bearing is made by putting the crank-pin at 90° from its dead-centre, and holding a plumb-line so as to touch the wire at the pin, noting the distance of the vertical plane thus established from the end of the pin or a fixed collar. If the plumb-line touching the wire also touches the crank-pin at the same distance from the reference-mark when the pin is at half-stroke below the wire, then the pin is turning in a vertical plane through the wire, and the outer bearing requires no vertical adjustment.

Where adjustment is required the usual procedure is followed of correcting half the error and testing the alignment again. The outer pillow-block is often made to rest upon a special foundation-plate which has provision for the adjust-

ment upon it of the bearing proper in the horizontal plane (Fig 232). The vertical adjustment otherwise is made either by shimming or filling in with sulphur or type metal below the plate, and the last and finest adjustment can be made by liners underneath the bearing-brasses. The alignment of vertical engines is usually simpler than that of horizontal engines, because the bearings are always on the bed-plate and have been made right as to alignment by the builders in their shop-handling. The alignment in the erection of beam-engines is a simple and obvious extension of the principles laid down above. The vertical cylinder-axis and the vertical through the centre of the crank-pin when the latter is at the top and at the bottom of its travel determine the vertical plane in which the beam must play, and the crank-pin at its 90° and 270° point must remain in that same plane. The alignment of engines afloat is so complicated by the motion of the hull that little use can be made of perpendiculars and horizontals, and the centre-lines must be depended on entirely.

CHAPTER XV.

CYLINDER, PISTON, AND PISTON-ROD.

159. The Cylinder-casting.—If the steam-engine is exposed to internal pressure from the steam radially in every direction along its length, the intensity of this radial pressure will be measured by the maximum steam-pressure throughout most of its length. At the ends, however, and against the heads the cylinder may be exposed to pressure much in excess of the steam-pressure from the presence of water. The intensity of the pressure due to water may be enormous. It will be apparent that as the piston nears the end of its stroke, the linkage of crank and connecting-rod forms the elements of an elbow-joint, and that the living force of the mass of metal revolving in the fly-wheel is exerted to straighten out this elbow-joint. If the water between the piston and the cylinder-head would fill a volume in excess of the clearance, it will be apparent that its incompressibility makes it act like a solid mass of wood or metal and transmit to the cylinder the entire effort of the straightening elbow-joint. If the metal is strong enough to hold, the engine will be stopped, or some yielding at the joints or bending of the mechanism may permit the crank to get past its centre. For this reason, because the actual strain on the cylinder is scarcely susceptible of calculation, the thickness of metal to be used in the cylinder is fixed rather on the basis of experience, by the condition of stiffness against deformation, and to be thick enough to permit of reboring when worn.

The metal to be used for a cast-iron cylinder should be a uniform close-grained iron having a certain hardness or ability

to resist abrasion. Experience in mixing irons in the foundry is of great use in this respect, and excellent results have been obtained from the use of an iron containing manganese. This metal seems to give a smooth or slippery surface to smooth abrasion, while working easily under the pointed cutting-tools.

The casting of the cylinder is either made all in one piece with the massive bed-plate or it is bolted to it. When made in one piece, as is usual in engines of the Tangye bed-plate pattern, a joint is avoided at the crank end of the cylinder, and no difficulty is to be experienced from the cylinder shifting its alignment with the bed. On the other hand, the finishing of that end of the cylinder is made more difficult. In Fig. 162, which represents a bolted cylinder, there will be observed radial set-screws attached to the flange on the crank-head, whose function it is to secure and adjust the alignment of the cylinder and the bed-plate.

The cover of the cylinder is bolted to the cylinder proper by means of a series of studs, whose inner end is tapped into the flange or solid metal of the cylinder, and whose outer ends carry nuts by which the cover is held steam-tight to its place. The joint between the cylinder and the cover is a ground or metal and metal joint and requires no packing, or at most a gasket of oiled paper. Many designers use a cross-section of the studs so that in case of entrapped water the stretch of these bolts within their elastic limit shall open the joint enough to release the water. These cylinder-covers are often cracked across by water, and precautions must be taken to prevent such accidents. The cover is usually so modelled on the inside as to enter the bore of the cylinder and help to reduce the waste room or clearance. While Fig. 162 shows the head covered with a false plate, it is easily seen that the head might be cast with hollow recesses in it in which steam can be circulated to prevent heat-losses, as in Figs. 146, 163, and 167.

The cylinder should be bored in the shop in the position in which it is to work. That is, a vertical cylinder should be bored on end, and a horizontal cylinder on its side. The

reason for this is that the weight of the metal in the cylinder will distort it while the boring-tool develops a true cylinder. The cylinder which was bored vertically will sag and shorten the vertical axis when laid on its side, while the cylinder bored horizontally under strain of its own weight will go out of round when stood up on end so that the weight is taken off.

The valve-chest is usually cast on the cylinder and in one piece with it so as to avoid joints. It may be on the top on one side or both sides or on the bottom. It will be constructed with a convenient lid or bonnet so that access can be easily had to valves and seats for examination or repairs. The nuts on all studs of covers, lids, and bonnets will be carefully case-hardened to prevent injury from wrenches. And it is best to use only fixed spanners accurately fitted to such nuts in order to avoid mutilating the corners. Such wrenches and spanners accompany every well-made engine.

160. The Counterbore.—By reference to Fig. 162 it will be observed that the bore of the cylinder at its two ends is slightly larger than the standard diameter through the rest of its length. This enlargement of the bore is called the counterbore, and its object is threefold.

1. The piston in its motion should slide up to and beyond the end of that part of the cylinder on which the piston bears. In other words, it must traverse the entire length of the cylinder-bore proper. Without this precaution the pressure of the piston or its rings, wearing the bore up to a certain point only, will develop a shoulder at that point, and any change in the length of the connection between the piston and crank-pin caused by wear will make the piston bring up against this shoulder at one end or the other and cause a knock or pound. If the piston laps over into the counterbore at each stroke, it wears the whole length equally and no shoulders should occur.

2. The slight enlargement simplifies the operation of getting in elastic rings such as are fitted to most pistons to make them steam-tight.

3. The counterbore, undergoing no wear in use, serves as a truly cylindrical surface to re-establish the axis of the cylinder for reboring in case of wear.

The counterbore and the steam-passages into the cylinder should be so related to each other and to the bore proper of the cylinder that the pressure of steam entering the cylinder should not come upon the piston sidewise, but from the end. If this detail is disregarded, the steam-pressure will at admission drive the piston against the opposite side of the bore and cause a disagreeable knock or pound. This will be worse at the head end, because the rod is more flexible. It is mitigated by prolonging the piston-rod out through the head.

161. Cylinder-cocks and Snifting-valves.—To drain the cylinder and to get rid of excessive water of condensation, a hole is drilled into each counterbore at the lowest point of the cylinder, into which a pipe-connection is tapped. These drain-pipes are controlled by valves, and discharge either into a closed tank, or into the condenser or a drain, or simply into the open air, as may be convenient. The valves are called cylinder-cocks, and will be opened when the cylinder is to be warmed at starting, or when it gives indications of excessive water by the noise of snapping or cracking, like a hammer-blow, which is the indication of its presence. In large cylinders, which will be weak to resist the action of water, and in marine engines, where the pitching and tossing of the boilers may cause abnormal quantities of water to come over with the steam, automatic relief-valves are provided to open of themselves in such an emergency. These snifting-valves are usually plain conical valves opening outwards, and held in place by a coiled or flat spring. The tension of such a spring is made greater than the usual steam-pressure, so that in normal conditions they remain on their seats. Excessive pressure from water lifts them off their seats against the spring and relieves the cylinder and its cover. Fig. 233 shows two types of relief-valves and a form of breaking cap. A special brass fitting screws into the cylinder, and has a thin plate

soldered over the large opening, but not too strongly. The plate is easily renewed if forced out by excess of water.

162. The Cylinder-jacket or Lagging.—The radiation of heat from the cylinder must be reduced as far as possible. This is desirable, first, to diminish condensation of steam which ought to do work in the cylinder, and, second, to keep the engine-room cool. Furthermore, the doing of work in the cylinder by expansion condenses a certain weight of steam

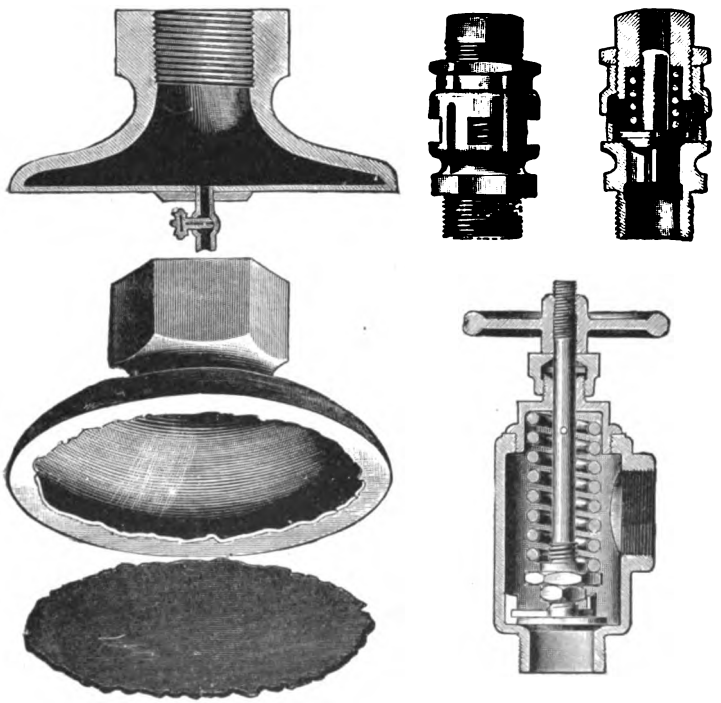

FIG. 233.

and it becomes desirable to diminish internal waste in the cylinder from re-evaporation of such condensed steam as far as possible. For this purpose the walls of the cylinder are often cast hollow so that live steam from the boiler can circulate through these hollow passages and keep the working bore hot. This hot steam surrounds the working bore, and the

appliance to keep it there is called a steam-jacket. Fig. 181 shows the steam-jacket and cylinder, and Fig. 162 shows the valve-chest thus jacketed. The constructive difficulty of the hollow bore comes from the unequal expansion of the outer and the inner wall in cooling. This makes the inner wall very liable to crack in service in large engines. The difficulty has been met in two ways. First, by making the bore of the cylinder an inner lining which fits in properly prepared shoulders or flanges in the outer casing which forms the jacket. The joint between the lining and the rest of the casting is made by copper rings. The cylinder-cover closes down upon this lining to prevent displacement. The other plan is, not to make the jacket a continuous casting, but to have its two halves united by an expansion-ring of some flexible metal which will make the joint steam-tight, but will yield to changes of length (Fig. 234).

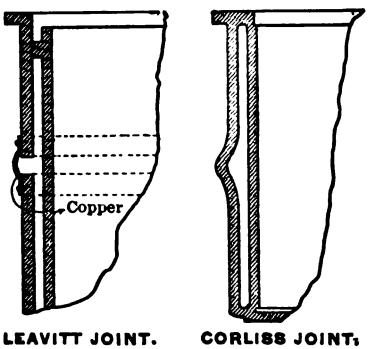

FIG. 234.

Outside of the jacket, or protecting the cylinder-casting proper if there is no jacket, is a provision for some non-conducting material. This may be hair-felt, mineral wool, or wood, or combinations of these with asbestos board. This non-conducting material may be held in place either by narrow strips of wood, or by thin staves of cast-iron, or by a sheathing of Russia sheet iron. This is called a lagging. The choice of method will be fixed by the taste of the designer, and it may be embellished by the use of polished rings. Its object

is to prevent radiation and at the same time to produce a pleasing effect to the eye (Fig. 166).

163. The Structure of the Piston.—The piston is to fit the bore steam-tight. It must therefore have sufficient area of contact with the bore to bear efficiently and to accommodate the packing devices. It is therefore not calculated as a rule, but receives a length which is the result of experience in the main. By reason of its size it would have unnecessary weight in large engines if made solid, and for the sake of lightness it is usually to be met in one of three forms.

1. The solid piston, which is usual in small engines only.

2. The box piston. In this the two faces of the piston are of solid metal, but the spaces between them are made hollow by the use of cores, in casting, having the shape of a sector of a cylinder. Such cores form the piston into a series of internal chambers separated from each other by partitions which form stiffening ribs to prevent the piston from being forced out of shape. These cores, which form the chambers, are supported upon feet of their own material which will leave holes in one or the other face out through which the material of the core is withdrawn. These holes in the face are then tapped, a plug is screwed in to refusal, and the metal of the plug cut off. The hollow where the core has been is at first filled with air only, but water or oil is apt to work through the pores of the iron into the cavity more or less. Some ugly accidents have happened from the heating of old pistons without a previous venting of these cavities. An accumulated pressure from air or gas heated to a high tension has rent the piston in pieces.

3. The spider-and-follower piston. In this the piston is made in two pieces or more. The solid part, called the spider, consists of one face and the side or contact surface. This cup or dish-shaped part contains the centre hub to which the rod is attached, and from it to the sides radiate ribs which give stiffness and strength. It is these radiating ribs from the central body or hub which give it the name of spider. The other face of the piston is a separate plate which bolts to

the ribs or hollow of the spider and forms the cover. It is called the follower. When the follower, instead of forming the entire face, is merely a ring rather than a plate, it sometimes retains its older name of junk-ring. It received this name when the packing material was hemp or junk and access was had to the grooves in which this junk was packed by the removal of the ring. In most cases the follower-plate comes off the piston or spider on the side opposite the piston-rod. An exception is met in beam-engines, where the piston-rod

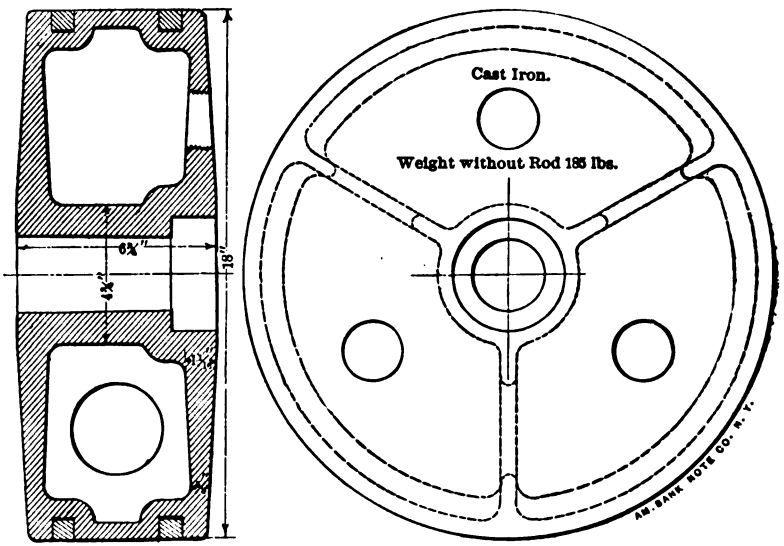

FIG. 235.

goes out through the top of a vertical cylinder. Convenience of access from the top induces the follower plate or ring to be on the piston-rod side in this case. The follower plate or ring is fastened to the spider by bolts which are themselves made of bronze, or their nuts are. The object of this practice is to prevent the nuts rusting fast to the thread and refusing to come off. The piston in most cases is made of cast-iron. This is because of the convenience of shaping and fitting, but furthermore because it is desirable that the piston and cylinder-bore should be of the same metal or of equal hardness.

Recently some locomotive pistons have been made of steel disks and of aluminium or other bronzes, for the sake of lightness; but when steel is used a cast-iron outer shell has often been fitted which forms the contact-surface with the cylinder and carries the packing appliances. It is likely that steel and strong metal-plate pistons will come more and more into use.

In vertical engines it is common to round the upper face of the piston or to make it convex, while the lower cylinder-head is made similarly convex upwards and the lower face of the piston correspondingly concave. The object of thus doming these surfaces is to cause them to shed water outward

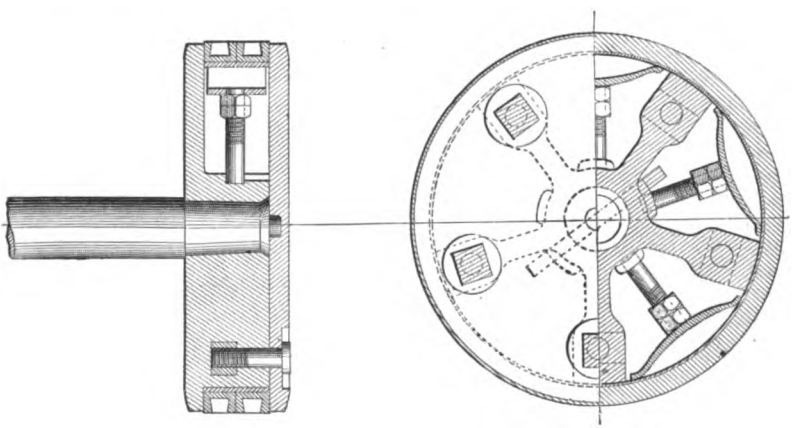

FIG. 236.

from the centre to the bore so that it will pass into the exhaust-passages and the drip.

Figs. 146 and 163 show the typical solid piston; Figs. 235, 162, and many others, typical box or hollow pistons; and Fig. 236, the usual form of follower piston used in locomotives. Fig. 237 shows the new type of steel-plate piston.

164. The Piston-packing.—The piston cannot ordinarily be fitted to its bore so as to be steam-tight. This is, first, because the piston and the bore are fitted cold and will expand unequally when heated. If the bore expands more than the piston, it leaks. If the piston expands more than

the bore, it is seized by the latter too tightly to be moved if it was a close fit when cold. Furthermore, wear of the contact-surfaces would make a solid piston fit loosely in the bore after a certain time and permit leakage. If the piston leaks, steam passes directly from the inlet to the exhaust-pipe, and so to waste without doing work. This increases the consumption of steam per horse-power and the consumption of coal. For such reasons some form of packing appliance to make a steam-tight joint and allow for expansion and wear has been used from the beginning.

In the first steam-engines made, before the machine tool

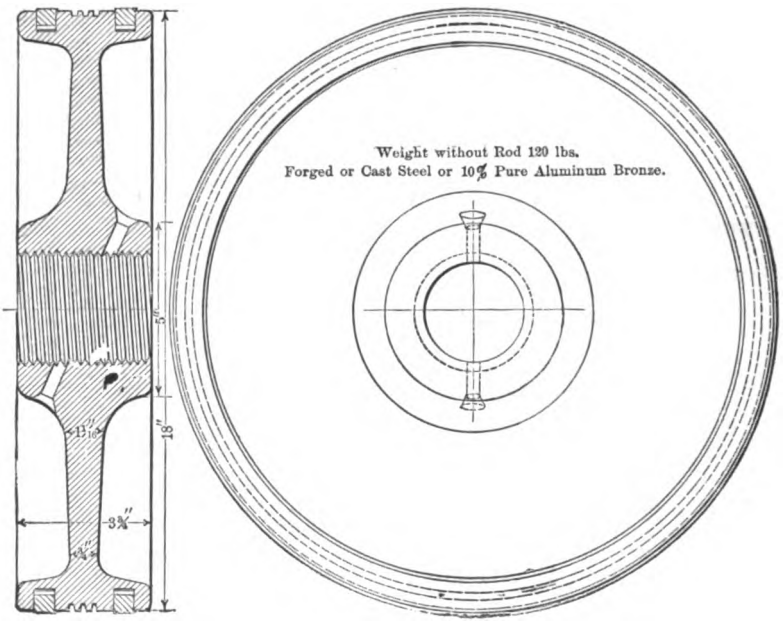

FIG. 237.

known as the boring-machine had been invented, the cylinder was cast as nearly cylindrical as possible and smoothed by hand. A joint between the piston and the cylinder was made by coiling a plaited square gasket of hemp-fibre or junk into a wide groove formed in the piston. This gasket was made of an eight-strand braid, and was held in place and forced out-

wards by screwing down the follower-plate or junk-ring (hence the name). These elastic or fibrous packings were adequate for low pressures and low temperatures, such as prevailed in the early days. They can still be used for water-packings, and combinations of canvas and rubber may still be used under conditions of this sort. What is known as the cup leather packing has also to be used with cold fluids. An annular ring of leather, having an exterior diameter greater than that of the bore, is pressed into the bore when wet so as to turn cup-shape, and is drawn up against the piston and held in place by a ring acting just like a junk-ring. The cup of the leather ring or disk which lies against the bore is pressed outwards by the pressure of the fluid, and leakage is prevented.

The only way in which pistons can be made tight without packing-devices is by the use of what is called leakage-grooves. These are a series of shallow grooves turned in the sides or bearing-areas of the piston and so numerous that the pressure leaking from one groove to the next shall not have time to establish itself in all of the grooves and pass from the last into the exhaust side during a period occupied by one stroke. The principle is that pressure must be fully established in the first groove before steam will leak from the first groove through the narrow space between the piston and bore into the second groove, and so on. Such pistons would not be tight if they stood still or moved at low velocity. At high speeds they serve their purpose if there are enough grooves, but their presence makes the piston of unusual length in the direction of its motion. The grooves become filled also with the lubricating material, and with water of condensation, which helps to make the joint tight. They have less friction than elastic packing.

165. Piston-rings.—By far the most usual method of making a piston steam-tight is by means of rings which fit in grooves turned in the bearing-surface of the piston. It is intended that these rings shall fit their grooves on their sides closely enough to prevent leakage around them, and that they

shall be forced radially outwards with sufficient force to prevent steam leakage between them and the bore. Such rings are called piston packing-rings, and they will differ with different designs according to their material, according to their number, and according to the metal used to keep them tight against the bore.

The materials used for piston-rings are cast iron, steel, and composite metals. The advantages of cast iron are, first, its cheapness; second, that it has the same hardness as the bore and so does not wear it unduly; and third, its convenient elasticity.

The advantages of steel are its elasticity and that it is not as fragile as cast-iron rings. Cast iron has been known to break from shock or vibration while in service and cause unpleasant consequences in the cylinder. The use of steel rings for pistons is attributed to Ramsbottam of England.

The composite rings are brass or bronze rings, or rings of such metal in which recesses are cast and in which recesses some soft bearing metal like babbitt is cast to form the contact with the cylinder-bore. The object of these composite rings is to obtain a bearing metal softer than the bore, so that the wear shall be concentrated upon the rings, which are easy to renew. The objection to the steel rings is that they are likely to

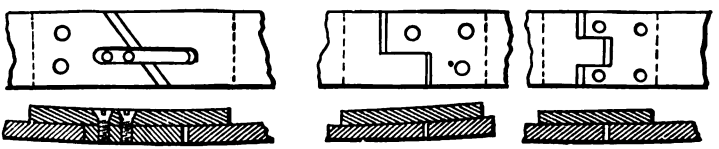

FIG. 238.

abrade the cylinder by their superior hardness or density, and to rebore the cylinder is more troublesome and expensive than to renew a worn-out ring.

The ring in order to be elastic must be a non-continuous ring, or with a break at some point in order that its length may vary. This joint between the two ends of the ring must be prevented from allowing a leak. This is done either by simply making the joint a scarf-joint, or by fitting a tongue-

piece which shall slip in the ring at one end while fastened in the other and thus close the joint (Fig. 238). It is very usual to have two rings, so that the joints in the two rings may be on opposite sides of the piston. Fig. 235 shows the rings in separate grooves, while Fig. 162 shows two rings in the same groove.

To press or force packing-rings radially outward against the bore, five methods are usual.

1. To depend on the elasticity of the ring itself. This is applicable to pistons up to 16 or 20 inches in diameter, but is not desirable for larger sizes. It is used both with steel and cast-iron rings. The ring is turned as a solid ring to fit a diameter larger than the bore. Usually the proportion is a quarter of an inch larger for each foot of diameter. The finished ring is then sawed apart and sufficient metal taken out at the joint to permit the ring to be squeezed together so as to enter the cylinder. It will tend to expand to its original size against the restraining bore, and this pressure makes a steam-tight joint. Such rings are called snap-rings. They do not guide the piston at all, as they are loose in the grooves sufficiently to move freely, but not enough to leak. To keep the radial pressure of the ring against the bore the same at every point so as not to wear the cylinder unequally, the thickness of the ring should be graduated and should be different at different distances from the joint.

2. The packing-ring proper of cast iron and steel is forced outwards by an inner or spring ring. This is a common plan in large vertical engines where the weight of the piston does not come upon the rings or springs. It can also be used in horizontal engines of medium size (Fig. 162).

3. Flat springs, pushing the rings radially outwards at several points of the circumference. This is a favorite locomotive design and for larger horizontal engines (Fig. 236). The flat springs can be adjusted by nuts or screws to give greater or less tension, and in horizontal engines with heavy pistons the tension on the lower springs may properly be made greater than on the upper. This type is applicable only to pistons

of the follower type, and the adjusting of the springs requires that the follower be removable. In vertical engines these springs should all be set out equally, and a clever design by

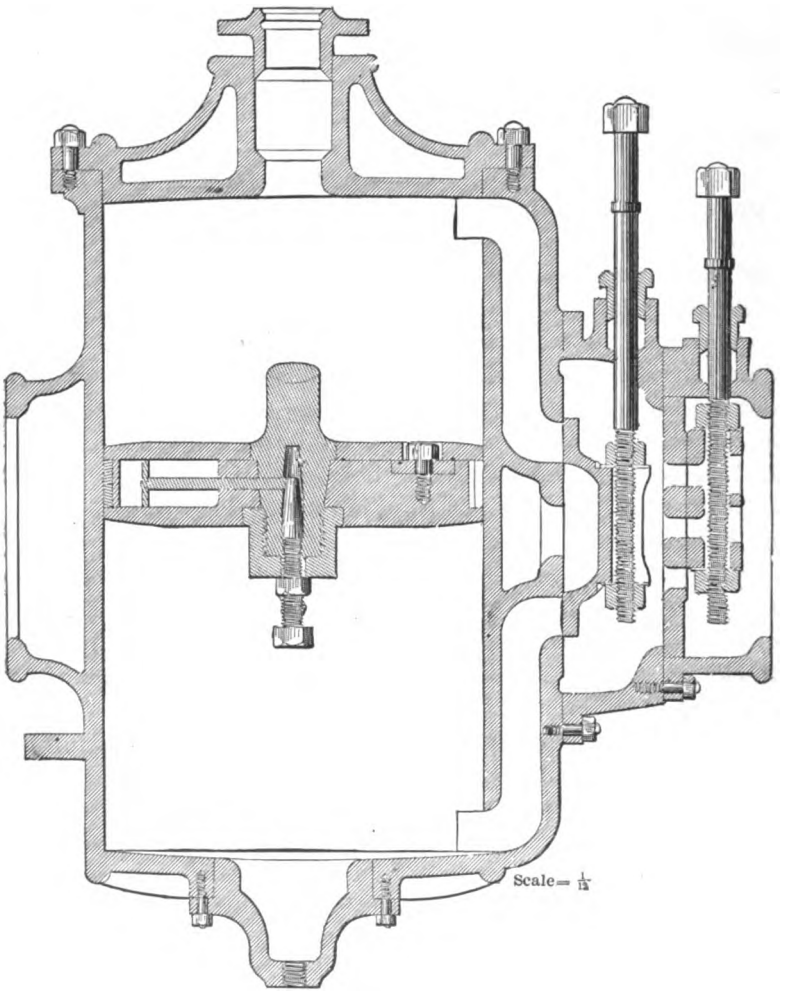

FIG. 239.

Mr. W. F. Durfee is shown in Fig. 238, where the adjusting-studs bear upon a conical surface so that they are all set out or relaxed by adjusting the cone from without.

4. The packing-ring may be forced outwards by positive means, such as screws or wedges or combinations of them. The idea is that with a true bore there is no occasion for elastic pressure upon the packing-ring, but that it causes unnecessary friction. If the ring is set out just enough not to leak, and the bearing-contact of the ring and bore is large enough, there is no occasion for give or take in the ring. The wedge or screw is variously applied, either to enlarge the diameter of a split ring by separating its ends or by pressure exerted radially upon the packing-ring or the inner bull- or junk-ring. This type of packing is applicable, of course, to follower-pistons only.

5. Steam packing. Fig. 240 shows a plate piston packed with two rings. The groove behind each ring is connected

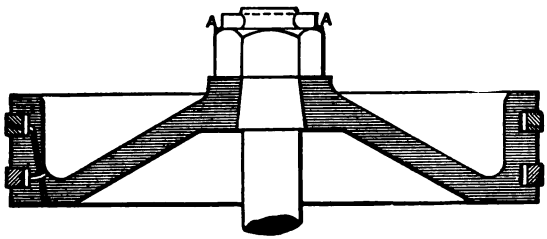

FIG. 240.

at several points through small holes with the steam-pressure acting on the piston, so that the packing-ring is forced outwards by an elastic pressure of steam behind it. It is usual but not necessary to make these packing-rings in segments which overlap each other so as to prevent leakage at the joints, whereby the steam-pressure does not have to overcome any resistance in the metal of the ring in forcing it out. When steam is shut off, the steam-spring ceases its action and lessens the friction in the cylinder. This form of packing was first associated in America with the name of Dunbar and has been much used.

A modification of the principle of steam piston-packing has been ingeniously applied in some large horizontal engines with a view to diminish the friction of the piston and its ten-

dency to wear the bottom of the cylinder. Steam is admitted through a hollow piston-rod to a place on the bottom of the piston, extending like a groove part way around its bottom surface. The area of this groove is calculated so that with the usual steam-pressure the upward reaction of the steam in it which comes from the hollow rod shall just balance the weight of the piston. Rings prevent the steam from leaking out of the groove, and in normal conditions the piston should slide upon a layer of steam and without metallic contact with the bore, so as to be nearly frictionless.

166. The Piston-rod.—The piston-rod has to transmit the motion of the piston to the mechanism outside of the cylinder. It has to withstand both push and pull, and the former without bending. It is rarely massive enough to have no tendency to bend with the weight of the piston when the latter is at the head end of horizontal engines. If calculated as a pillar for compression, it will be abundantly strong to resist tension provided that it be properly secured in the piston. The piston-rod has also to withstand the tendency to abrasion or to wear out of round where it passes through the cylinder-head and its stuffing-box. For these reasons a great many piston-rods are made of high-carbon steel which has been treated by the process known as cold-rolling, which gives it a particularly dense, hard, and close texture on the outside, and so increases the modulus of elasticity as to increase its resistance to bending from the weight of the piston. The usual methods for fastening the piston-rod to the piston are five.

1. The piston-rod is threaded and the piston screwed on it with a thin jam-nut or set-screw, to prevent unscrewing (Fig. 237).

2. The piston-rod is formed with a shoulder, and between the shoulder and the end a straight or tapering surface which ends in a screw-thread is turned. The piston is bored to fit the straight or tapering end of the rod, and when the rod is in place the thread on the rod protrudes enough to take a strong nut. The collar and the taper surface take the push

of the piston, and the nut takes the pull. These methods have the advantages of being cheap, and the joints between the piston and rod are easily broken (Figs. 162, 181, 240).

The objection to the second plan is that the projecting nut requires that a clearance be made for it (see Figs. 162, 239), and there is always a possibility that the screw-joint exposed to push and pull will in time work the nut downward along the threads so that the joint becomes loose. When this happens it makes a knock or pound which is hard to locate. The nut is liable to corrosion in the cylinder and to rust to its threads. Where it may be expected or desired that the joint between piston and rod is to be frequently broken, the nut may be made of a bronze alloy.

3. The taper is drawn in by a key of metal (Fig. 236). The end of the rod is formed into a tapering or conical surface which fits a corresponding hole in the piston. A rectangular slot is cut at right angles to the axis of the rod, and a similar one across the hole in the piston. These slots are so related to each other lengthwise that a rectangular key driven through the slot when the rod is in place shall bear in the piston upon the end nearest the large base of the cone, and in the rod upon the end nearest to the small base. The driving in of the key draws in the male cone of the rod into the female cone of the piston with a very strong pressure until the key refuses to be driven farther.

This method is an elegant one, but is applicable to follower-pistons only. The key is within the hollow part of this piston, it entails no clearance, it is very strong, and the joint between piston and rod can be easily loosed if necessary. This is done by the use of a special offset key driven after the original key has been removed, and which reverses the pressure by which the piston was drawn on the rod, by having its bearing upon the opposite ends upon the slot in each. The objection to it is its cost and the possibility of the joint working loose from a slacking off of the key. There is not much weight in these objections. The taper of the rod may be either 1 in 32 or 1 in 64, according to the amount of force

with which it is desirable to draw the one cone over the other.

4. Riveted rods. The end of the rod with collar or taper surface fits the piston and projects slightly through it. The projecting end is then upset and turned back upon itself as a rivet is headed. Such riveting of the rod may be done hot or cold. If done hot, the rod in shrinking as it cools draws the piston more tightly against the shoulder or the taper. The heat may injure or scale the surface of the rod. The advantages of this method are that it is cheap and tight and takes no room. The joint cannot be broken without destroying the rod. It is a favorite joint in small cheap engines, where the value of the rod is so slight as not to warrant the cost of an expensive joint. The cold-riveting of the rod does not injure the rod by scaling, and can easily be made tight against the least motion. The head of the riveted rod is often formed in a cup-shaped depression or countersink.

5. Shrinkage-joints. This is a very elegant joint for pistons of medium size. The hole in the piston which is to take the rod is made straight and cylindrical, but is smaller than the diameter of the rod in the proportion of .0025 of an inch for each inch of such diameter. This makes a hundredth of an inch for a four-inch rod. The piston is then heated to low redness, whereby the hole is expanded sufficiently to permit the rod to enter it. As it cools it contracts upon the rod, and seizes it with a pressure so great and firm that the rod will part somewhere in its length before the piston will slip off. The advantages of this joint are its tightness; it can be broken by heating the piston while the rod is kept cool; it involves no clearance. The objections to it are its demand for exact working to dimensions if it is to succeed, and the strain on the piston and the effect of heat upon it. This method of making joints by shrinkage is often used about the crank for its shaft and pin with the same advantages.

In follower-pistons the joint with the rod is often designed so that the follower-plate shall cover over it and remove any necessity for clearance in the cover.

The front end of the rod is to be secured to the cross-head. This must be a joint easily to be taken apart, since the cross-head must be put on after the piston and rod are in place in the cylinder. It will therefore be found that much the most usual plans are to thread this outer end of the rod and screw it into the cross-head with a jam-nut to prevent unscrewing; or to taper the end of the rod and the hole in the cross-head, and draw them together with a transverse key. The screw plan will be used on small and medium-sized engines, and the key on medium-sized and large. Figs. 260 to 266 will serve to illustrate typical methods of securing the rod to the cross-head.

167. The Stuffing-box.—The hole through which the piston-rod must pass steam-tight through the head requires to be fitted with special devices to prevent leakage. As in the case of the piston, the rod must be surrounded by an elastic and adjustable material which shall permit the rod to pass in and out with the least friction, and which yet shall seize it tightly enough to prevent leakage of steam when the pressure is on and prevent the entraining of water with the outward motion of the rod on the exhaust-stroke by a sort of a capillary action. The combination which is used for this purpose is called a stuffing-box. It consists of a sort of cylindrical box or cavity, the packing proper which goes into that box, and the gland by which the packing is compressed and held in place. There must also be a method for tightening and holding the gland.

The typical stuffing-box is exhibited in Figs. 162 and 165. It is quite usual where the rod enters the bottom of the stuffing-box to force a bronze annular bushing into the hole in the cylinder-head so as to make the rod fit this bushing quite closely. The advantage of the bushing is that it can be easily forced out and replaced when it becomes inconveniently worn. It is preferable to have the softer bushing worn by the rod rather than to have the more costly rod worn by the harder metal of the cylinder-head. The bottom of the stuffing-box cavity tapers inwards towards the rod, and the inner end of

the gland likewise. The effect of this is to produce a component inwards against the rod when the gland brings pressure parallel to the rod, and thus to compress the contents of the stuffing-box inwards upon the rod. Fig. 162 shows the gland drawn inwards by two stud-bolts. This is a most usual plan with rods of medium size. For small rods such as valve-stems the arrangement shown in the same figure and in Fig. 165 is more usual because of the room which is required for bolts of practical size. For such small rods the outside of the stuffing-box, instead of being formed into a flange, is threaded, and a hollow nut fitting over the gland will draw the latter inwards when screwed upon this stuffing-box thread. This is the usual method for valve-stems and similar small rods. For large rods above four or five inches in diameter two bolts are not enough to draw the gland symmetrically inwards and prevent it from cocking or binding sidewise, which would cause great friction and wear. Care must be taken to prevent this in any case, but with very large rods requiring four or six bolts in the stuffing-box, as in marine practice, the nuts are often made into small pinions or gears which work into one large gear so that the turning of one turns all the bolts at once, as in the self-centring chuck. This difficulty is avoided when the gland-nut is used.

For the packing material to be used in the stuffing-box the qualities to be sought are elasticity and low coefficient of friction, absence of abrasive effect upon the rod, and capacity to prevent and absorb leakage. Early packing materials were hemp and cotton-fibre plaited into gaskets and laid in loosely. More recently combinations of cotton in the form of canvas with rubber have been much used. The rubber gives elasticity, the canvas the quality of absorbing and holding the lubricant. The lubricant not only diminishes but opposes the passage of water. Paper-fibre also has been popular. Packings of this class are laid in the stuffing-box in a spiral coil, the thickness of the packing material being standardized to standard dimensions of the space in the stuffing-box which the packing is to fill. Packings of one-

half, five-eighths, or three-quarter inch thickness will be usual in engines of medium size.

The objections to these fibrous and rubber packings are first encountered with high pressures of steam, and secondly

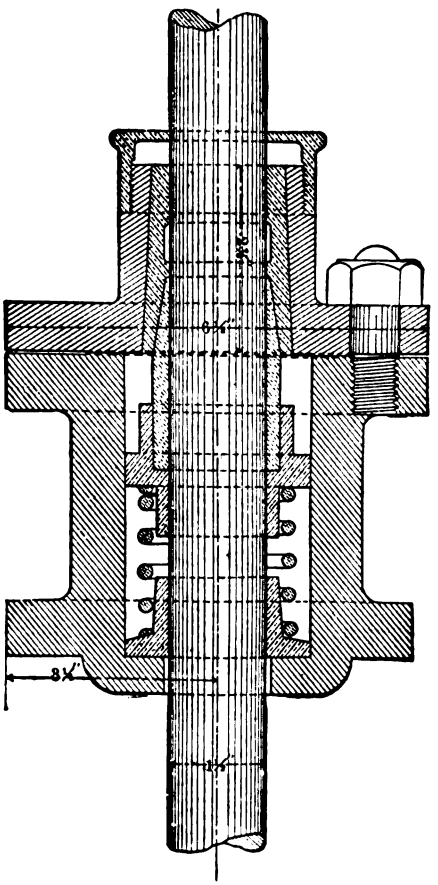

FIG. 245.

with high heats. Oxidation and abrasion of the fibre under pressure and heat and a hardening of the rubber under heat make it necessary to renew the packings frequently, and they have but a relatively short life of entire tightness. This trouble is particularly present in vertical engines with the

piston coming out of the bottom of the cylinder. Unless the packing be excessively compressed so as to cause undue fric-

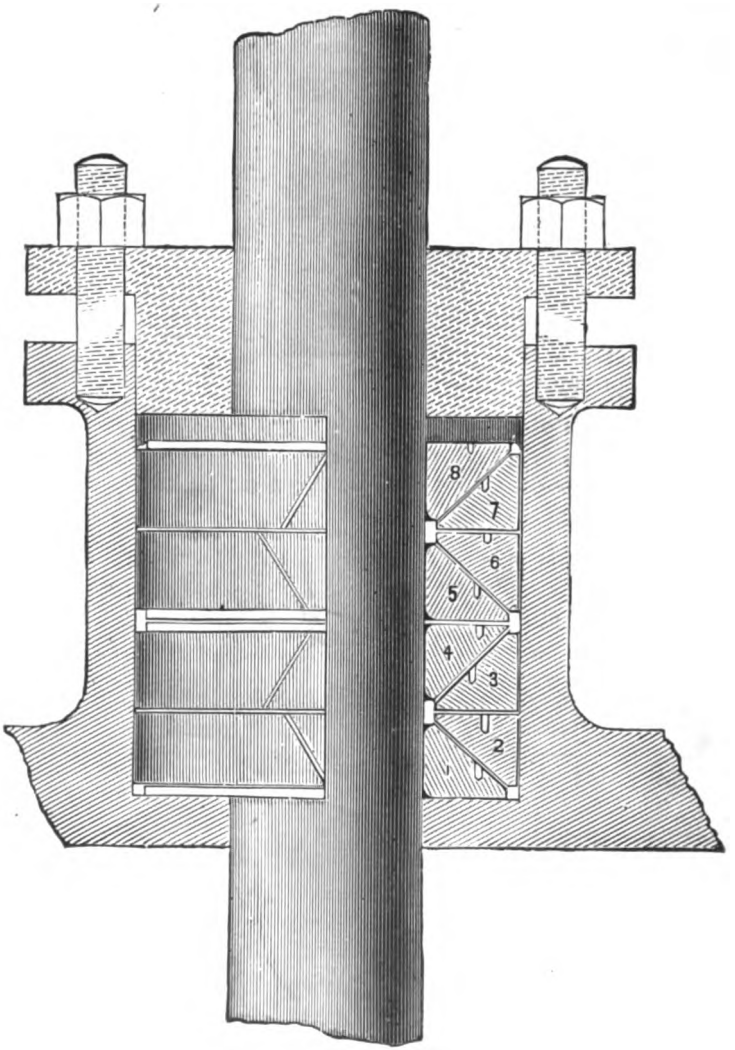

FIG. 246.

tion, the rod will draw water out with it past the packing by a sort of capillary action. Combinations of asbestos-fibre,

which is not affected by heat, have given great satisfaction in stuffing-boxes, but exceeding care must be used, both in manufacture and in use, that there be no hard or gritty particles of the mineral. Where care is not taken the rod becomes fluted or scored lengthwise from the abrasive action of such hard spots.

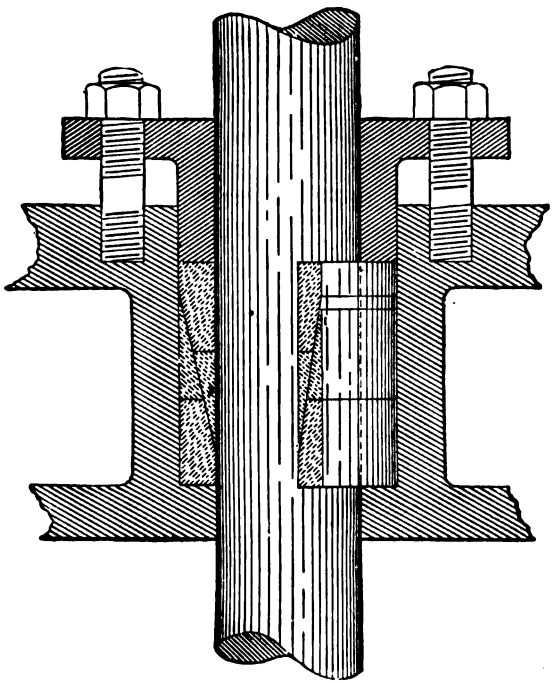

FIG. 247.

To make a more mechanical method of packing which should last longer and resist both heat and pressure, a wide variety of metallic packings has been made. The principle of such packings is to have a series of split rings whose exterior surfaces slope alternately from and towards the rod, so that when endwise compression is exerted by the gland they close inward upon it. Sometimes a coiled spring is introduced behind the gland, so that the compression of the split rings may be an elastic force instead of a positive and

unyielding compression. Furthermore, such rings are often arranged so as not to fill the stuffing-box space sidewise, but to admit a certain give-and-take if the rod and the axis of the cylinder should not happen to coincide perfectly. The most striking illustration of this will be found in the method of construction in the Straight Line engine, Fig. 167. Here the packing is really a long cylinder which has a motion around a spherical joint in the end of the cylinder to permit of adjusting its own alignment.

Certain forms of metallic packing are shown in Figs. 245, 246, and 247. If the piston-rod is to project through the back head, a stuffing-box is also required there; but it is of less importance if the path traversed by that projecting rod is inclosed in a steam-tight cylinder which it fits nearly tight. Provision must be made, however, in this case to get rid of water which may accumulate there from leakage.

168. Air-valves.—In engines of the locomotive class where the mechanism of the engine may be expected to run on for considerable periods after steam is shut off, provision must be made to guard against the pumping action of the piston in the cylinders. The continual exhausting of the contents of the cylinder makes an inward pressure, and dirt, cinders, and other foreign matter would thus be drawn in. This difficulty is met by having a valve opening inward attached to the steam-chest which will be shut upon its seat when pressure is on the valve, but will open by atmospheric pressure and let clean air enter when the pressure falls below atmosphere. Fig. 164 shows the principle of these air-valves upon a locomotive valve-chest.

CHAPTER XVI.

CROSS-HEAD GUIDES AND CONNECTING-ROD.

169. The Guides or Slides.—The cross-head gets its name from the fact that it is the head of the piston-rod, and as ordinarily constructed it forms a T or cross-shaped head to such rod. The cross-head and the guides which control its motion are counterparts or complements of each other, and the form, number, and arrangement of guides will be dependent on the preferred arrangement of the cross-head.

The condition which the guides must fulfil is that of keeping the end of the piston-rod from bending out of the axis of the cylinder when the strain on the connecting-rod produces such a tendency. The plane or planes of the guides must therefore be truly parallel to the prolonged axis of the cylinder, and it is the convenience of securing such parallelism by means of the level which makes it so desirable that the engine bed-plate and the cylinder-axis should be truly horizontal upon the foundation. In many forms of bed-plates the guides are formed and finished in the bed-plate casting and at the same setting of the tool at which the cylinder is bored. This insures a common axis for cylinder and guides. Where the guides are loose and need to be set up on the bed-plate great care must be exercised in their alignment.

When the fine-wire axis is established (par. 158), this is best done by means of special fixed gauges or trammels. In the absence of such appliances the ordinary surface-gauge, or better the micrometer surface-gauge, may be used. When one guide or one pair has been made parallel to the axis, the other guide or pair should be made absolutely parallel to the first. To have the alignment of the guides defective is to

invite wearing at the stuffing-box and wearing of the bore of the cylinder out of round, and to cause unnecessary friction and often a knock or pound in the engine which is hard to locate.

The guides may control the cross-head by action in a vertical plane or in a horizontal plane. They may be in number, one, two, or four. Their surfaces are exposed to abrasive wear, and they should be massive enough or so shaped

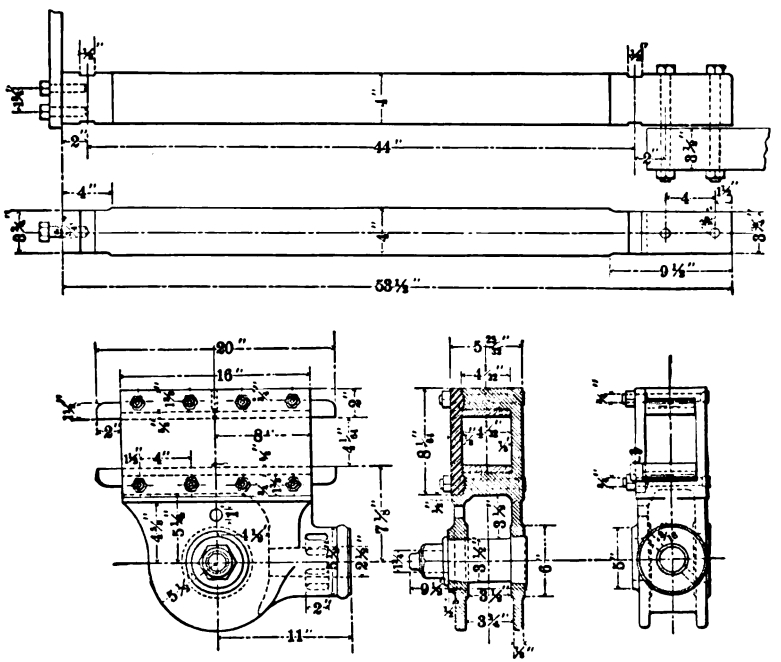

FIG. 260.

or supported as to resist the tendency to deflect. To resist abrasion they are often case-hardened, and to resist deflection they are often made thicker as the distance from the supporting ends increases.

Where but one guide is used it will appear in one of two forms. In the first form the cross-head will be arranged to embrace the rectangular guide on all four sides with the piston-rod and cross-head pin in the plane of the guide and

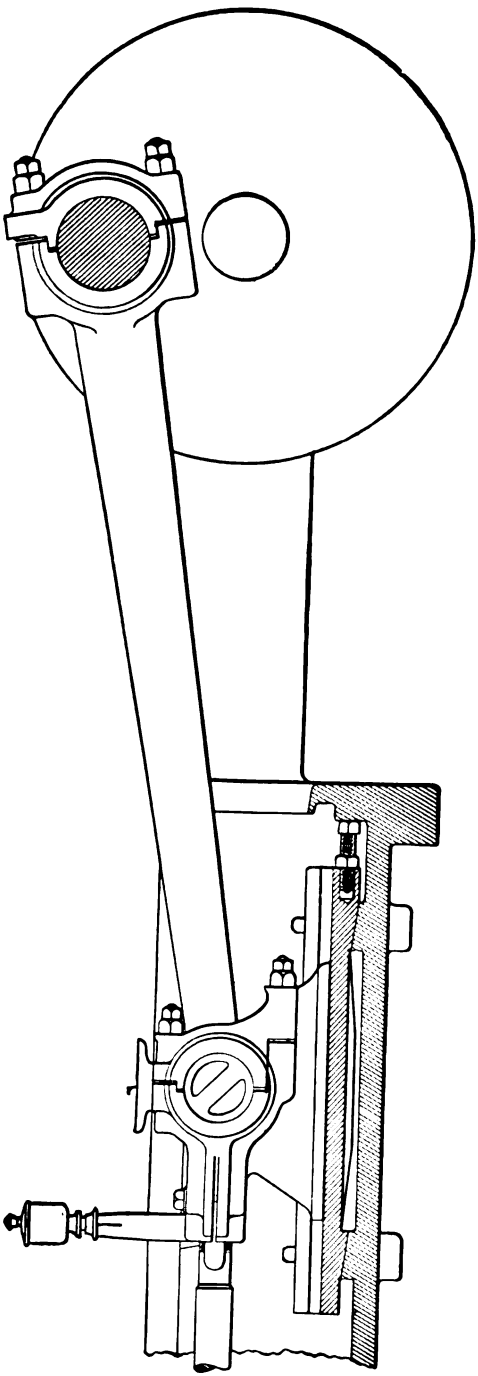

FIG. 261.

below it. The cross-head pin must be far enough below the guide (Fig. 260) so that the swing of the connecting-rod at its widest amplitude shall clear it. This form of cross-head is used quite a little in locomotive practice, but care must be taken that it should be long enough not to cock or bind upon its guide. This is likely to occur with short cross-heads of any form if the line of the resultants due to the reaction of the connecting-rod on the pin passes at any time outside of the centre of the pin, or even near the edge of the bearing surface. The other form of single guide is sometimes known as the guide for the slipper cross-head, and is shown in Fig. 261. The engine in this case must turn in one direction only, and the guide is a flat plane surface with suitable edges to prevent sidewise motion of the cross-head. Fig. 261 shows also a convenient method for adjusting the plane of the guide in case of wear of the rubbing surfaces. This form is very easy to lubricate.

When two guides are used they may either embrace the cross-head if the guides are in the plane in which the connecting-rod oscillates, or the cross-head must embrace them if they are in the plane at right angles to that in which the connecting-rod oscillates. If there are four guides, they will embrace the cross-head in either arrangement. This must lead to the discussion of the cross-head.

170. The Cross-head.—The cross-head for a single guide has been already discussed. With two guides it is much more usual to arrange them to guide a vertical cross-head, which is one guided in the plane in which the connecting-rod oscillates. With this arrangement the guides must be far enough apart to clear the connecting-rod in the angle just before half-stroke, when it departs furthest from the cylinder-axis. This makes the cross-head of sufficient extent laterally to meet the contact-surface. With such vertical cross-heads the guides may be flat and plane (Fig. 262), they may be cylindrical (Fig. 263), or they may be each in two planes inclined to each other (Fig. 264). The great advantage of the cylindrical guiding surface (Fig. 263) is that the cylinder and guides are so con-

veniently bored at one mounting with a boring-bar having two cutting heads. This secures coincidence of the axis of cylinder and guides. The objection to it is that there is nothing to prevent a twisting action except the attachment of the connecting-rod to the crank-pin. It is a very usual method in relatively small engines. With any of these cylindrical cross-heads the guide-surfaces usually are moulded and finished in the solid metal of the bed, and the adjustment for wear and for symmetry with the cylinder-axis under wear is affected by adjustments in the cross-head itself. The contact-surface of the cross-head is usually made by special metal pieces which are called gibs. These gibs may be simply cast-iron shoes, cast-iron shoes with recesses for babbitt or other bearing-metal, bronze shoes, or shoes of some wood well calculated to resist abrasion, such as lignum vitæ. The principle of these

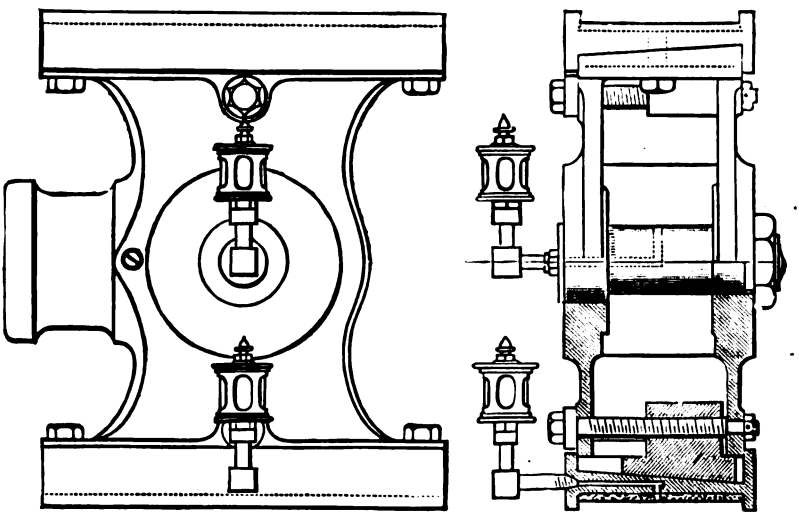

FIG. 262.

gibs is that they shall concentrate upon themselves the wear and shall be cheaply renewable. They should furthermore have a low coefficient of friction. These gibs being detached from the solid metal of the cross-head can easily be made to be adjustable in the plane at right angles to the cylinder-axis

by means of screws or wedges or bolts. Fig. 262 shows the adjustment by means of lateral wedges, and Fig. 264 the adjustment by longitudinal inclined planes. In early Corliss cross-

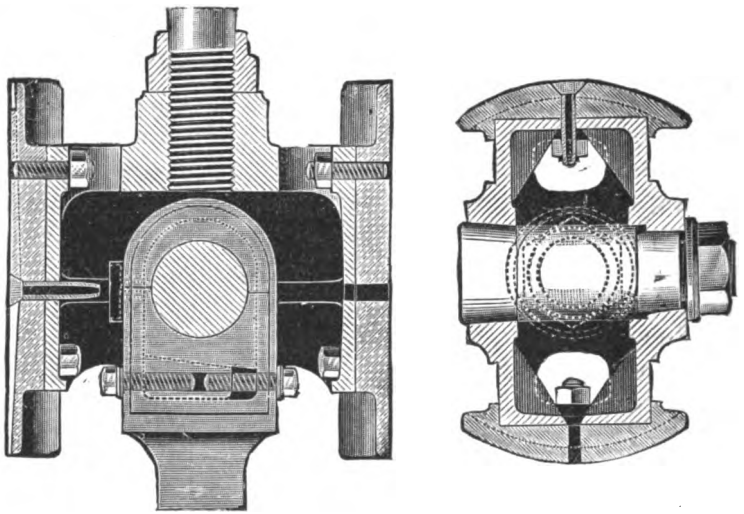

FIG. 263.

heads the central part was attached to the shoes or gibs by bolts of some diameter which were separately adjustable and

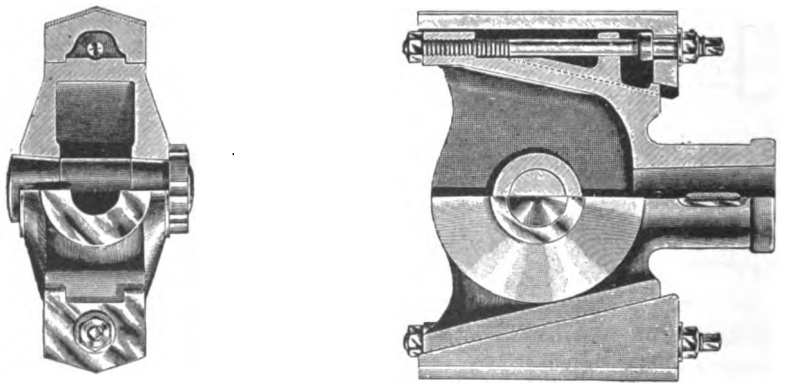

FIG. 264.

held by jam-nuts when the adjustment was complete. A simple type for small engines is often met in which an occa-

sional variation can be made by having the adjustment-bolt fixed in position, while washers or liners of thin metal or even of paper are taken out of the space between the collar and the gib as wear or adjustment may require.

The cross-head using two guides in the plane at right angles to the oscillation of the connecting-rod has the cross-head embrace the guide on three sides with gib adjustment. This is a usual adjustment in beam-engines such as Fig. 30. The gibs are like those shown in Fig. 260; but as they will be on the outside of the guides, their adjustment becomes very simple by the use of screws passing through the solid metal of the cross-head and embedding slightly in the gib. This can also be used on the vertical cross-head, but is not considered so satisfactory and mechanical an arrangement. Nearly all inverted vertical engines are guided in the plane of the connecting-rod when they have an A frame, or else make use of the slipper one-guide cross-head when they have open frames as in Figs. 15, 17, and 53.

The four-guide cross-head has been a favorite form for locomotive practice and in much stationary practice. It makes a comparatively light cross-head, and yet the contact-surface is abundant and generous. The two guides on each side of the connecting-rod can come as close together as convenient instead of having to be at a determinate distance apart. Fig. 266 will show the general appearance of a cross-head of this type, which has the further advantage that by generous bearing-areas the pressure per square inch may be so far reduced that no appreciable wear is to be expected during the lifetime of the engine, thus simplifying the construction of the cross-head, doing away with gibs and their appurtenances. The slipper cross-head has this same advantage. Where gibs are thought desirable they can be easily introduced, or wear may be taken up by the introduction or removal of liners of thin paper under the blocks which separate the guides at their ends. If the contact-pressure be kept below 40 pounds per square inch of area, and a proper lubricant kept continuously supplied, a thin film of oil will be

always separating the surfaces, and if they never touch they never wear. Care must be taken that the design of the cross-head prevents the resultant of pressures ever passing outside

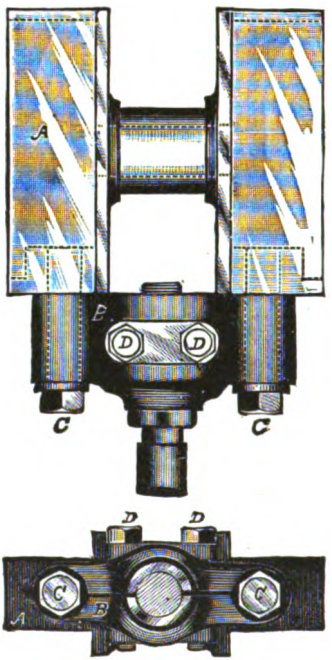

FIG. 266.

of the contact-surface. If it does, there will be a tendency for the cross-head to cock or press a corner down upon the guides, scraping off the oil and setting up abrasive wear. It is best to have the pin on which the connecting-rod swings in the centre of the length of the cross-head for this reason. The gibs, furthermore, should have grooves cut diagonally or zigzag fashion in their contact-surface to hold the oil and distribute it sidewise over every element of the guide. It will be apparent that the lower guide needs to be lubricated in a horizontal engine which throws over, and the upper guide or upper gib in an engine which throws under (Fig. 3). The resultant of alternate push and pull is always in one direction for the engine which turns in the same direction.

171. The Cross-head Pin or Wrist-pin.—The connecting-rod requires a pin on which to oscillate while transmitting its motion to the crank. It is usual to make this pin fast in the cross-head and have the connecting-rod swing on it. This, however, can be reversed if necessary. The cross-head must transmit the effort to the connecting-rod through the axis of the piston-rod and the connecting-rod. Hence the wrist-pin must either be borne in a hollow in the cross-head or, if the cross-head is solid, the connecting-rod must have a forked end and take hold of the pin on each side of the cross-head. There are objections to this latter plan, to be discussed hereafter, so that it is most usual to support the pin so as to have it in double shear. In vertical cross-heads the pin is apt to be made a tapering fit in its hole so as to be drawn to a tight bearing by its nut. A small key also is used in addition to prevent turning (Fig. 264). In horizontal cross-heads the pin is usually inserted from above into a proper slot. The guides and a steel bolt through the guides keep it from displacement It is usual to make the wrist-pin hollow in order that oil may be introduced through the centre, and so out by a radial hole to the contact-surface. In the Porter wrist-pin the surfaces outside of the sector of steam effort are flattened away so as to form an oil-cellar from which the surface of the connecting-rod will continually draw oil upon working surfaces.

172. Parallel Motions.—In beam-engines, where the guide for the cross-head can only be secured by braces to the frame, which makes their alignment troublesome and uncertain, it has been quite usual to dispense with guides, and to control the cross-head by means of jointed linkages. These linkages are so designed and proportioned that the motion of the cross-head is compelled to be in a straight line, either exactly or so very nearly that the error is inappreciable. Such linkages are called parallel motions. The best known are Watt's, Evans', Russell's, and the Peaucellier cell. Their use is restricted in modern practice to a very narrow scope, and the

student is referred to treatises on kinematics for a discussion of their properties.

173. The Connecting-rod.—The connecting-rod in the typical engine mechanism must transmit the alternate push and pull of the steam effort to the revolving crank-pin. It must furthermore withstand the tendency to bend transversely due to the flinging effect caused by its own weight or mass as it passes the half-stroke point and has its transverse motion suddenly changed. Furthermore, its bearings at the two ends are exposed to friction and wear, since the entire pressure on the piston must be borne upon the relatively small areas of the pins, and the crank-pin rubs its contact-surface in the connecting-rod through a space equal to its own circumference in one revolution and under the pressure due to the steam. It will be apparent that the flinging strain will be greatest with a long rod and at high rotative speeds. The rubbing difficulty will be greatest with high pressures and large diameters, and the wear greatest with high rotative speeds.

The cross-section of the connecting-rod to meet these requirements is in most cases an elliptical or oval, or even an elongated rectangle with rounded top and bottom having the longer axis in the plane of motion. Lengthwise the greatest section is either put at the middle or in more modern practice it is gradually tapered from the cross-head to the crank (Fig. 261). Flinging effect is zero at the cross-head pin and is greatest at a point just behind the crank-pin, or more properly at the radius of gyration of the rod. In very long connecting-rods, such as are used in river-boat practice East and West, the connecting-rod (here often called a pitman) is braced by a king-post trussing of wrought-iron rods whereby strength to push and pull is fully retained and yet a much lighter rod results than would be the case if stiffness were sought by a solid deep rod (Fig. 11). A recent section of steel rod which has become much used in locomotive practice where the conditions for the connecting-rods are very severe is the I-shape section, in which the two flanges give strength against deflection and all unnecessary metal

and weight are withdrawn which would bend the rod (Fig. 272).

The effort of the rod is to deflect the cross-head sidewise. The shorter it is the worse this difficulty. With a connecting-rod of infinite length there is no tendency to bend the cross-head and piston-rod. Ordinarily for practical reasons the connecting-rod will be two and a half to three times the length of the crank. It will be apparent that a connecting-rod of finite length introduces an irregularity into the motion of the piston. The piston has moved through more than half-stroke outgoing when the crank is at 90° from its dead-centre, and on the return from the outer dead-centre it has not moved through half-stroke at the 270° point. These irregularities affect the accelerating of the reciprocating parts, but in ordinary cases are masked by the fly-wheel and by the steam-distribution.

174. The Stub End.—In order to provide for the concentrated strain on the crank-pins and cross-head pins of engines an especial appliance has become nearly universal. The pins are usually of steel, carefully hardened in best practice, and it is desirable that they should not wear by abrasion, but that if wear must occur it should be concentrated upon the surfaces which bear upon these pins, rather than on the pins themselves. Furthermore, the construction of these bearing-surfaces should be such that wear may be easily taken up to prevent lost motion or pounding, and that when worn they may be easily and cheaply refitted or replaced. These conditions have brought about the combination of brasses, strap, gib and key, or cotter and wedge which is known as the stub end of the connecting-rod.

The brasses are two half-cylinders which embrace the pin and form the bearing. They are called brasses when made of bronze (copper-tin alloys) as is usual, and even if made of cast iron. They may either be true bronze bearings, or they may be made with recesses into which Babbitt or other bearing metal is cast to form the actual contact-surface. The special purposes served by the brass or bronze bearing are,

first, that it is easily cast and tooled; second, it is softer than the steel pin, and the wear will be concentrated upon it; third, it has a low coefficient of friction in case lubrication should become defective; fourth, it has a high conductivity for heat, and so draws heat of friction from the pins.

In marine practice, and elsewhere where it would be inconvenient or impossible to stop, spare brasses can be kept on hand to replace that which must be allowed to wear itself out; and the replacing of such worn brasses is not a matter of shop repairs, but can be made by simply taking down the joint.

The brasses should touch each other at the point which divides the bearing in two halves. As the bearing wears and lost motion begins, the brasses should be filed or scraped down until the wear or lost motion is taken up. Another plan is to have the joint open a little when the two half-bearings are in place and fill the gap with liners of thin sheet metal so that the bearing can be made solid. As the bearing-surfaces wear, these liners are successively taken out until the joint comes brass and brass, when refitting is necessary. Not to fill the opening between the brasses is to invite a cramping of the bearing upon the pin with friction heating and all attendant difficulties. In some locomotive practice in the past the brasses have been capped so as to encase the crank-pin completely and keep dust out.

The end of the connecting-rod proper bears against the outside of one brass while the other is drawn against the first half by a U-shaped forging called the strap (right-hand end of Fig. 270). The strap is carefully adjusted to the brasses

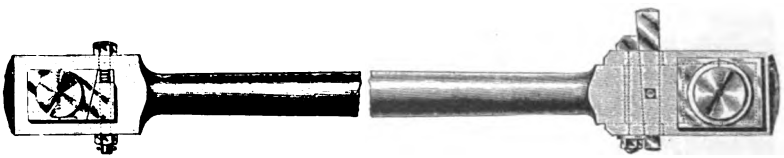

FIG. 270.

and the connecting-rod end, and is held in place and to its work by the combination which is known as the gib and key, or cotter. From Fig. 270 it will be seen that the gib and key

in this form of stub are counterparts and form compensating inclined planes. As the key slides along the gib, the width at any section is increased. If then the gib and key be fitted in slots in the connecting-rod body and in the strap so that the key rests against the outer edge of the slot in the connecting-rod, the effect of driving down the key will be to draw the strap back, since the gib bears upon the strap, but is free from the inner end of the connecting-rod slot. By drawing back the strap, the joint in the brasses closes together and the key refuses to drive. A set-screw keeps the key from sliding out, and a solid construction results which is nevertheless easily removable and adjustable.

It will be apparent that as the brasses wear in the form of stub shown, and the key is driven down, the effective length of the connecting-rod shortens. In time also the slots in the strap and rod end will come to match, and the key will drive no farther. This difficulty will be met either by renewing the brasses altogether or by fitting in between the rod end and the inner brass liners or shims of sheet metal which will move the centre of the bearing outwards as much as the wear has shifted it inwards. The form of stub shown in Fig. 270 is called an open stub. If open stubs are used at both ends of a connecting-rod, its effective length is shortened at the two ends by driving in the keys.

It is called a closed stub when the gib or key bears against the inner brass directly, with the end of the rod as its abutment bearing-surface. Fig. 271 shows this construction using a wedge instead of a gib and key. As the wedge is adjusted inwards the inner brass moves towards the outer and away from the centre. The closed stub thus lengthens the rod to take up wear. If a closed stub is used at one end and an open stub at the other the distance between crank-pin and piston is varied by the difference in wear at the two joints; and if there is no difference in this wear, the length of the mechanism remains constant. This plan is much the most usual and to be preferred. The closed stub may be applied either to a rod whose end is forged solid (Fig. 270), or the

strap may be strongly bolted or braced and bolted as shown in Fig. 271. The wedges which are much used in modern engines for setting up brasses are operated by screws and are fully shown in the illustration. To prevent the loosening of keys in large engines and at high speeds, where the set-screw would not be enough, the end of the key is sometimes drawn down to a rod and threaded. A nut on this rod bears upon a Z-shaped bracket bolted to the rod and holds the key in place. It is the trouble arising from slinging of the key which has caused the wedge with its bolt to receive preference in modern usage. Fig. 272 shows a stub of this type, and illustrates also the I section of the rod. A form of stub first introduced in marine practice is shown in Fig. 273. The gib-and-key construction is abandoned, and the half-brasses are held together in a jaw by bolts parallel to the length of the rod. These bolts have to withstand the push and pull of the rod, but they make a very stiff and strong stub particularly well adapted for crank-pins of considerable length. They are also the foundation for very deep connecting-rods made of hollow tubes for compression, while through-bolts resist the tension as they hold down the outer halves of the brasses (Fig. 14).

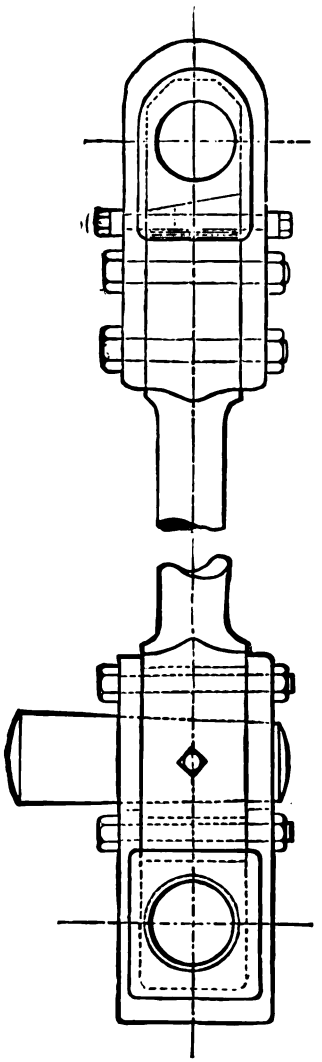

FIG. 271.

Another form of stub is known as the round-end stub. The end of the connecting-rod has a tapering hole within which is inserted a bronze bushing which fits the taper on its outside and the cylindrical pin on its inner side. As wear takes place, the split in the bushing is filed out, and the bushing forced a little farther into the taper hole whereby it is closed

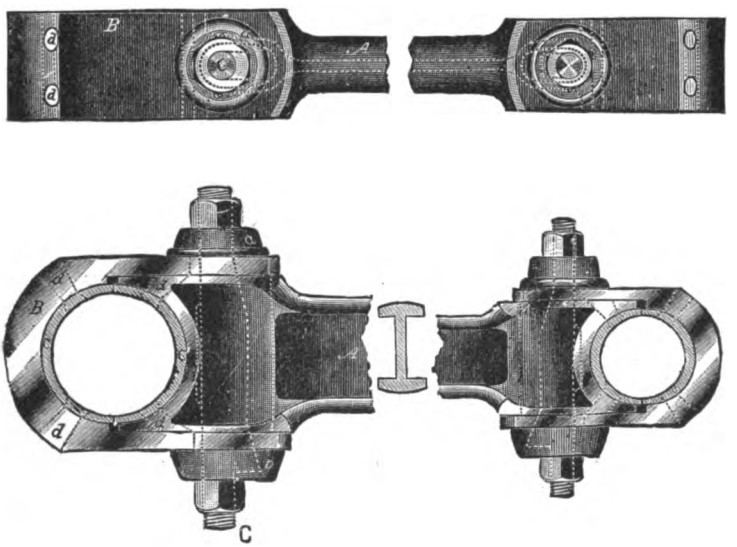

FIG. 272.

together. This is particularly adapted for parallel rods and side rods of locomotives, where it is necessary that the length between the centres should always remain the same. With the gib-and-key plan one end of such side rods had to have double keys, one outside the brasses and one inside. Sometimes this cylindrical bushing plan is used without a split and provision for adjustment. When wear has become enough to be annoying, the worn bushing is thrown out and a new one put in place. In light rods with small pins the solid eye is sometimes split, a little metal sawed out, and the split held from opening by a bolt. As the bearing wears, tightening of the bolt closes up the slit and takes up lost motion.

An interesting provision for taking up wear with ordinary

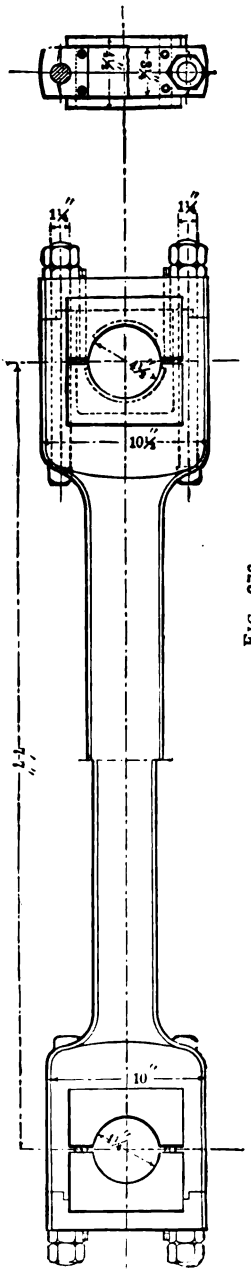

FIG. 273.

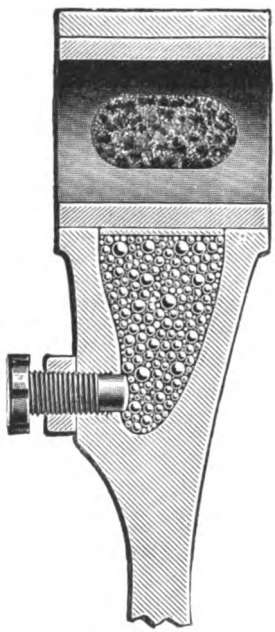

FIG. 274.

brasses is shown in Fig. 274. A cavity behind the inner brass is filled with steel balls, and into that cavity a set-screw projects. The balls displaced by the screw press the brasses outward, and yet are practically immovable from an outer force. They act like the particles of a fluid to exert equal pressure upon the brass. This device is the invention of Mr. C. W. Hunt.

175. Forked-end Connecting-rod. Double Rods. — When it is convenient or necessary to have the cross-head pin supported at its middle and to have the motion taken off symmetrically on each side of the axis of the piston-rod, the connecting-rod end may be formed into a sort of rounded Y with a bearing on each arm. This bearing will be of the usual stub construction, with provision for taking up wear (Fig. 15). The difficulties and objection to this forked-end construction are those which result when the two bearings wear unequally. The consequence of unequal wear is that one side or the other draws the farther end of the rod to one side and against the collars of the crank-pin when it is keyed up after refitting. The strength of the connection may be enough to keep the rod continually out of straight, causing friction, heating, and wear. The only proper way to treat such a forked rod after refitting is to take off the crank-pin strap and brasses and, with the brasses of the fork keyed up close, test the alignment of the naked end of the connecting-rod with the crank-pin at the inner and outer centre. If it does not fall in line with the pin, liners must be introduced behind the brass on the short side, if it is an open stub, until the alignment is perfect. Forked-end connecting-rods are usual with the main connecting-rods of beam-engines, where they are made necessary by the support of the pin by a single beam. The use of a double beam with the pin between them makes this construction unnecessary.

The symmetrical connection of the cross-head of a beam-engine to the central beam of such engines would compel a connecting-rod forked at both ends. This would be troublesome and difficult, and for this reason it will be found that it

is usual to use two short connecting-rods for this purpose. Each has two stub ends, and the same difficulty attaching to unequal wear requires to be guarded against here. Unequal lengths of these rods springs the cross-head, twists the beam, and gives general trouble. The same difficulty is to be guarded against in engines of the back-acting type for blowing or pumping, such as shown in Figs. 13 and 14, where the connecting-rods are attached to crank-pins outside of the fly-wheel from the wide cross-head. So critical is this difficulty from unequal length of two similar connecting-rods that the proper construction for such a case is to have the cross-head merely pinned to a boss on the rod so that it may yield and adjust itself to such slight inequalities of length. Many massive cross-heads have been cracked from inattention to this detail.

Small connecting-rods which can be hollow are frequently arranged to have a key at one end or even in the middle set up the brasses at both ends. A rod which passes through the hole in the bore bears against the brass at one end and against the key at the other. The term pitman sometimes applied to a connecting-rod should be limited to either a massive or long connecting-rod or to the connecting-rod which couples a vibrating beam or treadle to a revolving crank. The latter is its proper use, but it has been sanctioned by usage as a name for those wooden rods, stiffened by iron forgings on top and bottom, which are used as connecting-rods for the marine engines of the Western rivers. The mining origin of the term has been already referred to (par. 11).

CHAPTER XVII.

CRANK-SHAFT. ECCENTRIC. FLY-WHEEL.

176. The Crank-shaft.—The power of the cylinder is to be delivered in continuous rotary motion. The crank-shaft, therefore, requires to be one upon which the crank shall deliver the effort of the connecting-rod, and which shall carry the fly-wheel for regulating inequalities of effort and resistance; and if the power cannot be taken off from the fly-wheel, it must also carry the wheel or pulley or drum required for this purpose. Two great classes of crank-shafts are usual for single-cylinder engines or tandem compounds. They might be called single- and double-crank arrangements, but are more usually known as centre- and side-crank arrangements. In the side-crank arrangement the crank-pin projects from one side of the crank and is exposed to shearing in one plane. The bearing close to the crank will be on the frame, but the bearing on the other side of the fly-wheel will be independent. In the centre-crank or double-crank arrangement the crank-pin is between two cranks, and there is a bearing for the crank-shaft on each side of the connecting-rod upon the bed-plate of the engine. In this type there is usually no outboard bearing, but two fly-wheels, or two belt-wheels to be used as fly-wheels, overhang the bearings on the bed. Fig. 228 shows the arrangement of side-crank engines, and Fig. 229 the arrangement of centre cranks.

When there are several cylinders side by side the arrangement of the crank-shaft must conform to this condition. For the ordinary cross-compound engine where the power is taken off from a central fly-band-wheel, as in Fig. 95, the cranks

will overhang. In marine engines the cranks must be double, and generally the double crank makes the strongest arrangement. Fig. 280 shows the single overhung crank, and Fig. 281 the double cranks for a triple engine.

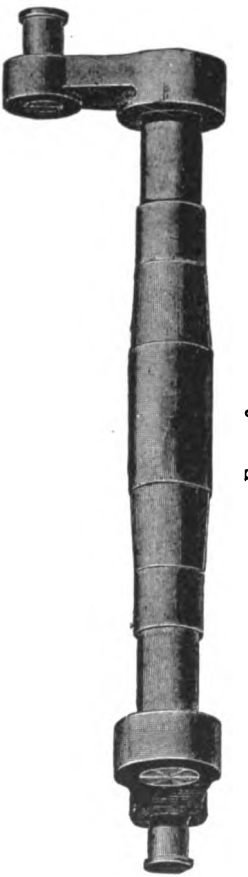

FIG. 280.

FIG. 281.

177. The Crank-pin.—The crank-pin is usually of high-carbon steel. It requires to be very solidly inserted into the eye of the crank, and to this end three methods are usual. First, it may be forced in by a press. The hole in the eye is made cylindrical, and the end of the pin which enters the eye receives a very slight taper at the very end, but the cylindrical

contact is practically of the same size in the eye and the pin. The pin is then coated with white lead and forced into the hole, which is a little too small for it. This is done either by hydraulic or screw presses exerting a force of 20 or 30 tons. The second method is to shrink the crank upon the pin by the method described in par. 166. The third plan is to have the pin and the hole taper, while the inner end of the pin is finished into a screw-thread on which fits a nut by which the tapers are drawn together. In some forms of disk-crank the pin may be held with a key. It is very usual to model the

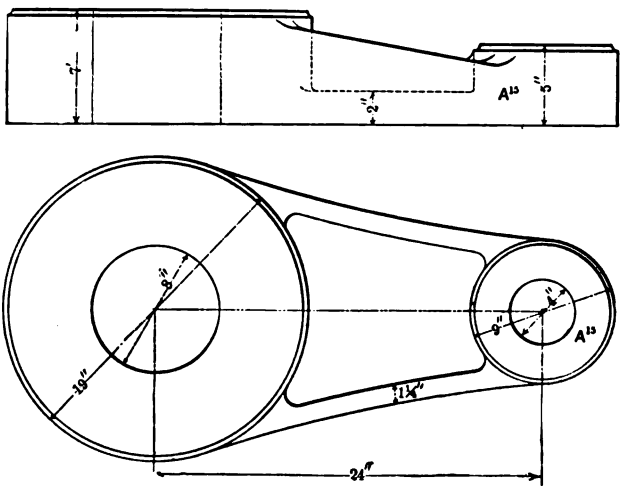

FIG. 282.

crank-pin with collars to prevent sidewise displacement of the brass of the connecting-rod upon it. On the other hand, many crank-pins are made without collars, and the shape of the brass keeps the connecting-rod from the plane of the crank, and a plate which bolts to the end of the pin forms a finish which the eye seems to demand, and keeps the connecting-rod from appearing to slip off. When collars are used it is common to fillet the corners rather than to give them a sharp angle where they join the bearing surface. The pin is not only stronger, but there is less danger of a binding of the brasses.

178. **The Crank.**—Whether single or double, cranks may be of cast iron or wrought iron or of steel. Since the shaft must be of wrought iron or steel, the continuous crank which is made in one piece with it, must be of the same metal. The cast-iron crank is therefore limited to cases where the shaft is built up. The ordinary form of cast-iron crank is shown in Fig. 282. Such crank requires to be secured to its shaft by means of steel keys inserted partly in the shaft and partly in the hub of the crank. It is usually more convenient to make use of two keys than to try to get sufficient shearing area in one. A much more usual form of the cast-iron crank is the

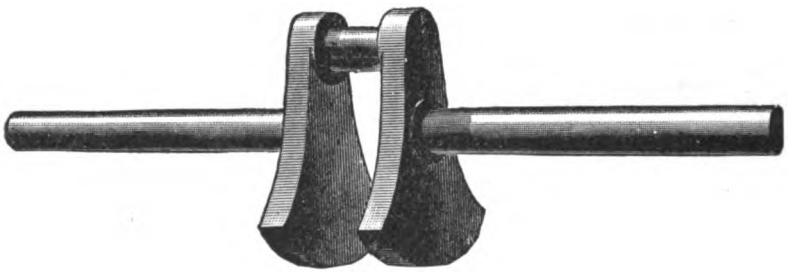

FIG. 283

disk-crank, such as shown in Fig. 228. This arrangement permits of balancing the weight of the crank itself on the other side of the centre of motion, and furthermore gives a convenient space for additional metal which may serve to counterbalance the living force of the reciprocating parts. At high speeds, moreover, the disk-crank meets less resistance from the air. Where the disk-crank is not used in vertical engines a form of balanced crank, such as shown in Fig. 283, will be required to offset the weight or unbalanced effect of the mechanism. Some designers have built up cast-iron counterweights upon a wrought-iron crank. Fig. 284 shows an arrangement of this sort.

When there are two cylinders to work upon one crank-shaft and it is to be a continuous or double crank, the double crank will be forged solid if the length of the stroke is not too great. The excess of metal will be cut out by slotting, and

then the pin turned by mounting the shaft eccentrically in

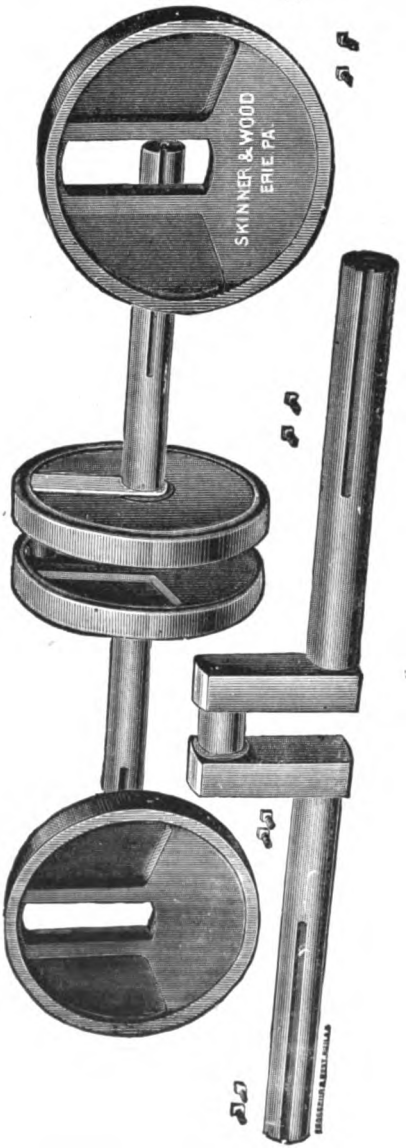

FIG. 284.

a lathe of sufficient size. Of course it is not easy to forge such cranks with short distance between them, nor is it easy

to get them truly at right angles. Built-up crank-shafts, where the crank-pins and lengths of shafting are separate or fastened together by shrinking and keying, have been much used in marine practice (Fig. 285).

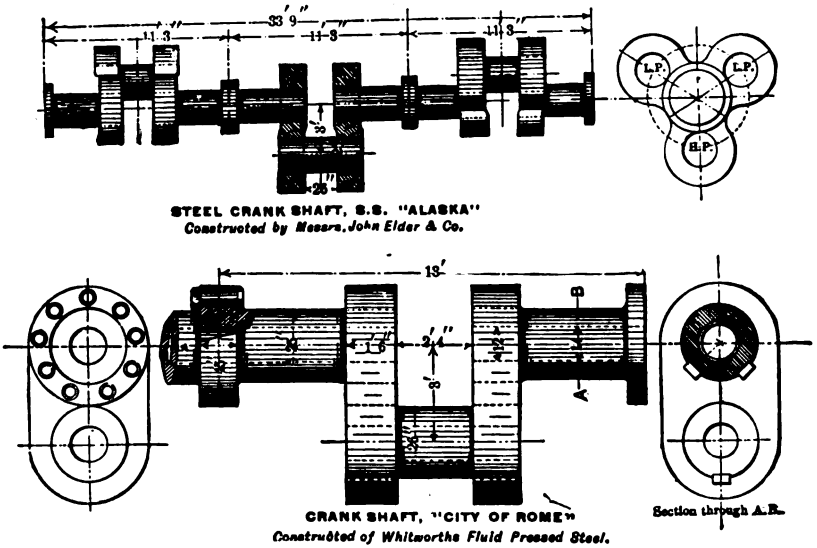

FIG. 285.

179. **The Locomotive Crank and Shaft.**—The ordinary American locomotive is constructed so as to be what is called outside-connected. The cylinders and driving mechanism are outside of the frames, and the crank-pins are inserted into proper bosses in the driving-wheels. Inside-connected engines, with the cylinders and mechanism between the frames, require cranked axles and have no pins on the drivers. The inside-connected designs have been most popular in Europe by reason of a supposed steadiness and because the effect of torsion between the two cylinders is exerted on a less length of axle. The cranked axle is, however, more difficult to forge. The inconvenience of having the principal parts of the mechanism clustered together under the hot boiler and between the frames, and the possibility of equal steadiness for the outside-connected design, have given the latter the preference in

America. The driving-wheels are pressed on the axle by heavy hydraulic pressure, and twisting is prevented by keys. The crank-pin is also pressed into its boss. Where the length of the engine permits, the connecting-rod or main driving-rod acts upon the crank-pin of the main or forward driver. In short engines the connecting-rod will go to the rear driver. In the first case the main pin will have two bearing-surfaces on it, that for the main rod being nearer the face of the wheel. In the latter case the main-rod bearing will be outside of the bearing for the parallel or side rod. Where there are three drivers on a side the main bearing will be outside, and the side rod connecting the main to the front driver will require a pin-joint near the main stub so that no cross-strain shall be brought upon it from inequalities of level in the track. Locomotive crank-pins seem to undergo a structural change from the combined effect of vibration and shock to which they are subjected, so that it is a custom to force them out after a certain number of miles have been run and have them forged over and replaced, to prevent a sudden breakage on the road with its attendant disaster.

180. The Marine Crank-shaft.—For the ordinary paddle-wheel service in deep Eastern waters the crank is a double one, forged, and built up with inserted pin. The two halves are essentially alike, and with bearings close to the crank in the main frame and within and without the wheel. In a very few cases the two halves of the double crank are not in the same plane, but one is slightly behind the other in an offset eye. The object of this is to diminish the considerable danger in all long-crank engines lest the crank settle down upon the lower centre by the action of the waves upon the propelling wheels when the engine is at rest, which makes it troublesome to start. In Western river-boat practice with side wheels the shaft is usually not continuous across the hull, but the two engines are separate and are separately handled. This gives greater manœuvring power in currents and for landing. Some special ferry-boats for railway service have also been constructed in this way. For marine engines which

drive propellers at the stern it is apparent that the entire energy which propels the vessel must find an abutment against the lengthwise thrust of the screw in the construction of the shaft itself. This is done by means of what is called the thrust-bearing. This consists of a large bearing in which a sufficient

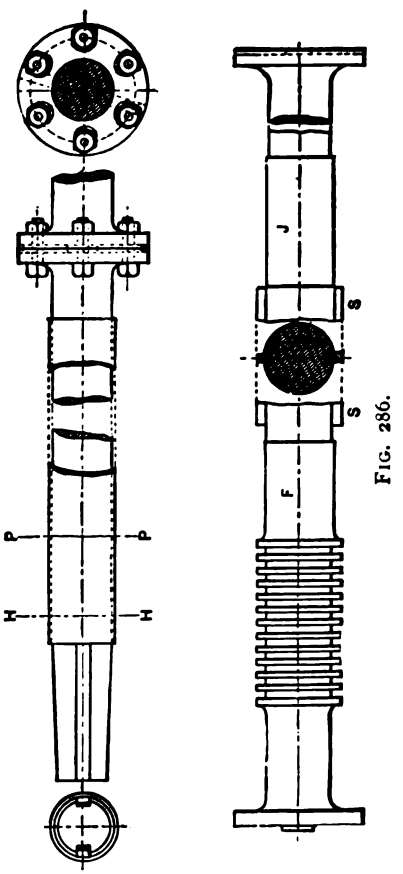

FIG. 286.

number of grooves or rings is formed which fit corresponding collars upon the shaft. The area of these collars and their number are proportioned to the energy for which they must provide, and the contact-surfaces in the bearing are very carefully fitted with Babbitt or similar bearing metal. These

bearings are also cored so that circulation of water can be provided to keep them cool. These thrust-bearings are usually placed close behind the engine, so as to be always under the careful scrutiny of those running the engine. As the engine will be located as a rule near the centre of gravity of the hull, there will have to be a number of joints in the propelling shaft both for convenience of manufacture and for convenience of handling and repair. These sections will be joined by flanges carefully and strongly bolted together. Fig. 286 shows the construction of the thrust-shaft and propeller section of a marine engine, and Fig. 287 the provision made at the stern to permit the shaft to pass outwards through the hull. The joint is made water-tight by means of stuffing-boxes, and the actual bearing of the shaft is upon lignum vitæ or similar bearing material. Such shafts of large diameter are apt to be made hollow in best modern practice in order to secure strength with lightness and to eliminate the defects which in solid forging are apt to concentrate themselves at the centre both of the ingot and of the forging which results from it.

181. **The Main or Crank Bearing.**—The bearing of the crank-shaft close to the crank has to withstand all push and pull due to the steam effort for which it is the fulcrum, and also the weight of the shaft, fly-wheel and attachments, and the pull of the belt, if one is used to take the power off from the shaft. Furthermore, the shaft turning in this bearing must remain very carefully in line both back and forth, and up and down.

To meet these requirements the main bearing must have a generous area of contact so that alternate pressure shall be unable to become so great as to squeeze out the lubricant from the contact-surfaces, and it must be capable of minute adjustment to compensate for wear. Fig. 288 shows a usual construction of such main bearing, in which, instead of two half-boxes as in the stub ends, the bearing-surface is made up of four segments. These segmental bearings are called quarter-boxes, and in the design shown are separately

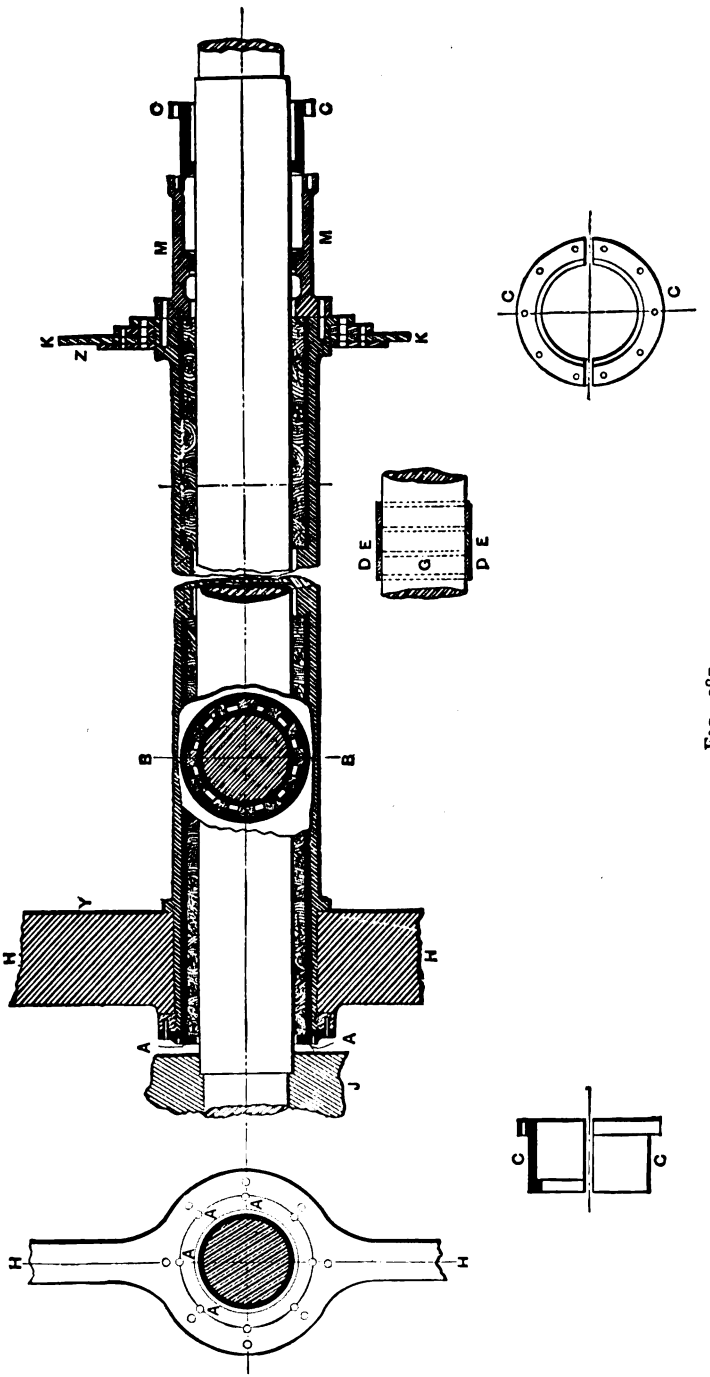

FIG. 287.

adjustable by means of wedges which come down through the massive cap of the bearing. The quarter-boxes are the ones which have to withstand the steam-effort in a horizontal engine, while the lower one has to meet only weight. Many different modifications of the wedge idea are to be met in the various bed-plate designs, such as set-screws through the face or side of the bearing and the like, but the same underlying principle is present in all. The main bearing requires special and abundant provision for oiling, to which reference will be made in proper course. The outer bearing or outboard bearing of the engine-shaft has already been discussed with the necessity for its adjustment for proper alignment. It has to withstand only the weight of the shaft and the pull of the belt. Both bearings should have length enough to prevent the shaft from bending under the strains to which it is exposed when the diameter of the shaft has been intelligently calculated. One or the other bearing should have collars to prevent undesirable endwise motion. These collars, however, must not offer any danger from a seizing caused by expansion due to heat. Such a bearing is said to be "collar-bound," and excessive friction is the result.

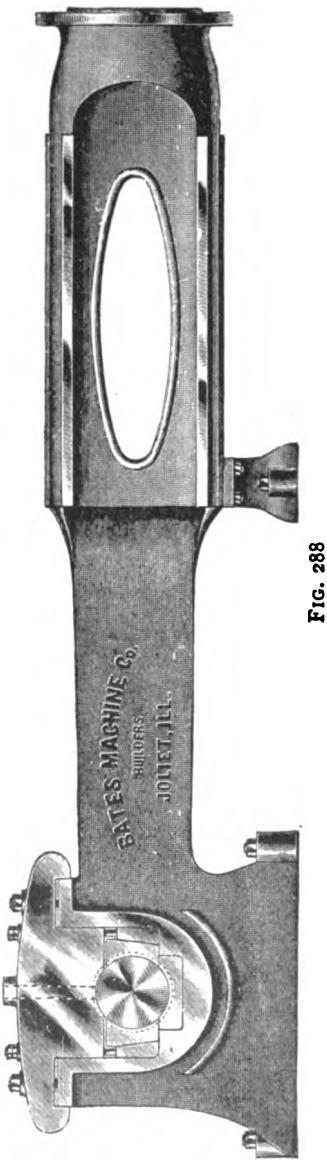

FIG. 288

182. The Eccentric.—It has been previously mentioned (par. 82) that most valves are driven from an eccentric on the shaft. This eccentric, when not forming a part of the shaft-governor, will usually be placed just outside of the main bearing. It will be fastened to the shaft either by keying or by set-screws or by both. In a very few cases it is forged solid on the shaft. By reason of the diameter of the eccentric the stub construction is not usual or convenient, but the rod fits the disk by means of a bearing-surface which is called its strap.

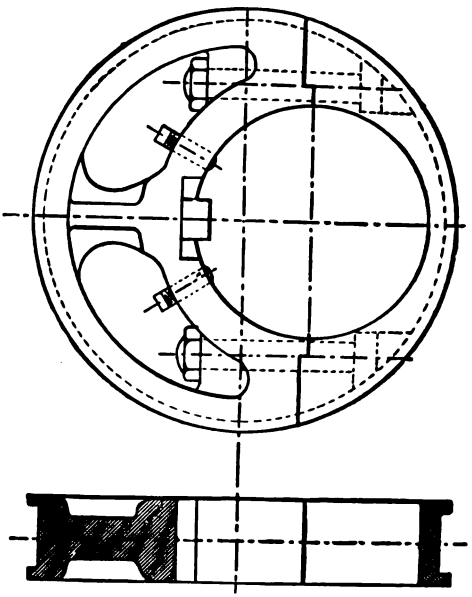

FIG. 289.

This strap is made in two halves which meet on a diameter at flanged surfaces by means of which the two halves are bolted together. The large area of contact due to the large diameter of the pin makes adjustment necessary only at long intervals as slow wear occurs, and this is done either by filing away the joint of the strap or by removing the liners of thin sheet metal, one by one, which were put in there when the joint was first fitted. To prevent sidewise motion of the eccentric-

strap, it is made either to fit in a groove in the face of the eccentric, or the eccentric fits in a groove in the strap. The latter plan has some advantages, since the strap thus forms a trough within which the oil will gather and be retained at the bottom, whereas in the other arrangement the oil has a tendency to run off (Figs. 289 and 290).

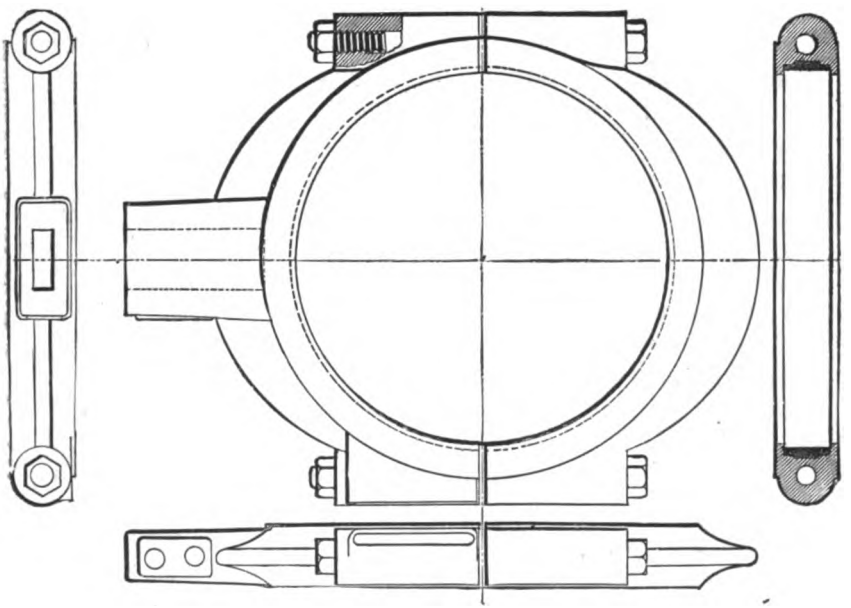

FIG. 290.

183. The Eccentric-rod and Valve-stem.—The components of the crank-motion of the eccentric which are not needed to move the valve must be provided for as in the main connecting-rod. Hence there will be a joint of some sort between the eccentric-strap and the stuffing-box at which the valve-stem enters the valve-chest. In small and short engines the weight of the eccentric-rod will be small, so that it will be enough to provide a flexible or pin joint at the end of the valve-stem without providing a means to guide the latter except that provided by the stuffing-box. In heavier engines the end of the valve-stem may either be guided by a slide, or

a rock-shaft must be interposed which will carry the valve-rod and from which the valve-stem will be driven. Where this rocking-shaft or vibrating lever is introduced it furnishes a very convenient means to modify the throw of eccentric and valve, and also gives opportunity for hooking and unhooking gear (see Figs. 226 and 183). The principal joints of such valve-rod and eccentric-rod may either be stub ends, or hardened steel pins may be used with hardened steel bushings which they fit accurately. The rubbing work is so small that such well-made work lasts indefinitely. The eccentric-rod is usually fastened to the eccentric-strap by screwing it into the latter with a jam-nut to prevent its working loose; in larger engines it will be a taper fit brought home with a key. In very long engines, such as are met with in river-boat practice, the eccentric-rod will be an open-work trussed structure of flat rods which ends in the single flat or square rod guided by the roller-frame by which it is unhooked. The locomotive-rods are usually flat, and are bolted sidewise into recesses made for them in a tail formed upon the inner eccentric-strap (Fig. 188).

The valve-stem is the name applied to the short rod which enters the steam-chest and actuates the valve. It will be either attached to the valve by means of a yoke which embraces the latter, or by a screw-joint with the necessary jam-nuts. The valve-rod is synonymous with the valve-stem except where the Stevens cut-off is used, where the valve-rod is the massive rod lifted by the toes, which carries a bracket or offset to which the valve-stem proper is attached by means of jam-nuts, whereby careful adjustment is made possible.

184. The Fly-wheel.—In early engines turning with a low number of revolutions, the fly-wheel required to be of large diameter, and was for this reason nearly always distinct from the wheel from which the power was taken off. In more modern engines the convenience of having the fly-wheel serve also as an element of the transmissive machinery has brought around the use of fly-band-wheels, where belts or ropes are used to take off the power from the engine-shaft. It is so

much less the practice in recent years to use gearing in transmitting from the engine-shaft that the fly-wheel is very rarely a toothed wheel.

The function of the fly-wheel is threefold. First, to store up excess of energy received from the piston in one part of the stroke, and to give it out when the effort shall have grown less by expansion. Second, to equalize variation in the leverage with which the varying steam-effort acts upon the crank to revolve the shaft. Third, to give out or absorb energy when variation in the external load or resistance occurs suddenly. The fly-wheel is therefore an accumulator and an equalizer, and the reserve which it stores will be greater as its mass is greater and the leverage greater with which that mass acts. Since large mass means great weight, it is often convenient to increase the virtual radius of the wheel (mathematically its radius of gyration), and thus diminish weight which causes friction in the bearings. The objection to the large wheel is the space which it occupies vertically, and the complication in foundation which it causes. With large diameters centrifugal force in the rim becomes considerable, and may become equal to or surpass the tensile resistance of the material of the rim. For these reasons it will be found that smaller diameters prevail in modern engines, and that roughly the relation of four times the stroke of the engine is likely to approximate the diameter chosen. In early engines thirty-foot fly-wheels were often to be met, but now eighteen to twenty feet is a large diameter, and in centre-crank high-speed engines six feet has become a large size.

The function of the fly-wheel as a regulator is quite distinct from that of the governor. The fly-wheel is to compensate for instantaneous variations, and give out or absorb energy, and maintain a constant speed under variations of the equality between effort and resistance which are too small to reach the governor and cause a variation of the cylinder-effort. For permanent variations, where the load is increased or diminished, the capacity of the fly-wheel is soon exhausted, and the engine will either increase or diminish its speed.

The governor must then adjust its mechanism to bring the engine back to speed, and adjust the piston-effort to the new value of the resistance. It is often found in electric-railway power plants that wide variations occur in the current upon the line without the governor showing any appreciation of them. This is to be explained by the action of the fly-wheel and the absorption and giving out of energy under such instantaneous variations. The weight of the fly-wheel must be very largely determined by the character of the external resistance. A weight capable of equalizing and steadying the variations of the cylinder-pressure and of crank-leverage with a constant resistance would not be enough to serve as the necessary reservoir when heavy demands of power are made for short intervals. The best illustration of such wide variation of resistance is the rolling-mill engine, in which only the friction of the machinery is to be overcome when the train is empty, but in which the maximum power of the engine is taxed when the piece is between the passes and undergoing the action of the rolls. Rolling-mill-engine fly-wheels will have a weight of from thirty to fifty tons to meet this requirement, and in cable-railway and electric-railway practice, and also with the slow speeds of pumping-engines, very massive wheels are used.

185. The Strains in Fly-wheels.—The fly-wheel in rapid revolution has its rim in tension by reason of centrifugal force. If the ring had no arms, it would be all equally in tension; but by reason of the arms resisting extension as the ring expands under strain a cross-bending occurs between the arms if the wheel is solid, and if made up in segments this bending is concentrated close by the joints. In the second place, as the rim is the most massive part and tends to revolve uniformly, it will happen that when the resistance slows down the engine, the arms will be flexed by the effort of the rim to maintain uniform speed, and, on the other hand, the effort of the piston when the shaft has lagged behind will tend to bend the arms in the opposite direction. Both of these strains bring a very serious twisting effort upon the keys by which

the wheel is secured to the shaft. If the wheel is a fly-band-wheel, the effort of the resistance comes directly to bend the arms. In the third place, initial strains of construction may be present in the wheel, which may superpose their effect upon the action of the other two strains. These can be greatly increased if the plane of the rim by bad machine-work should be out of the plane perpendicular to the shaft. A sort of gyroscopic action must occur from the tendency of the mass to revolve in the perpendicular plane. The strains from shrinkage in cast-iron wheels form a great objection to the use of solid wheels of large diameter of this material.

186. Solid and Segmental Fly-wheels.—Small fly-wheels can be made all in one piece; the hub (by means of which the wheel is fastened to the shaft), the arms, and the rim being all cast at the same time. The arms may be straight or curved. When straight or curved they are of elliptical or fusiform section, with the long axis in the direction in which the wheel turns. The elongated section gives strength against the distortion of the rim as speed varies, and moreover opposes the least resistance to rapid motion through the air. The straight arm is carefully tapered from the hub to the rim, and is jointed to both surfaces by wide and generous fillets. The objection to the straight arm, and which the curved arm is designed to avoid, is the strain of compression in the arms and of tension in the rim, which results when the larger mass in the rim cooling after the other parts have become solid contracts in such cooling. The straight arm cannot yield, but the curved arm allows a slight bending and relieves the rim from strain (Fig. 4). Skilled designers and careful handling in the foundry will diminish and almost eliminate these difficulties, so that the straight arm with carefully proportioned masses will be found characteristic of nearly all modern work in small sizes and is more workmanlike and pleasing to the eye.

The difficulty connected with the shipment of heavy wheels in one piece, and the considerable extent of the contraction in cooling in large diameters, results in the practice of making the

wheels in two halves. This is further a convenience in erecting the engine. The hub is divided, and each half receives an external flange construction so that the hub bolts together over the shaft, and the rim is similarly cut and flanged on its inside so that each half can be strongly bolted to the other (Fig. 182). The plane of these joints at hub and rim is usually different, so that the bolt-strains may not be entirely axial in both sets of bolts at once, and to diminish the difficulty from the tendency to fly into two halves by centrifugal force.

For wheels of still larger diameter and heavier weight a segmental construction is usual both for convenience of shipment, handling, erection, and avoidance of shrinkage-strain (Fig. 18). The simple fly-wheel which does not have to be used as a band-wheel, and has a rim somewhat rectangular in section, will have an arm and a segment of the rim cast in one piece. The rim-segment will have a length of one-half the distance on each side of the arm necessary to reach the adjoining arm on each side, so as to have an appearance somewhat like a T with a circular cross-piece. The inner end of these arms is inserted in the proper sockets in a massive hub, to which they are secured by keys (Fig. 292). The rim-segments are joined together by careful fitting upon radial planes, and the rim made continuous by a joint which appears in several forms. A piece of wrought iron may be inserted into a recess in the interior of the rim, and taper keys or carefully fitted bolts driven through the rim keep this wrought iron a prisoner. A modification of this is to have two or four such prisoners let into recesses on the sides of the rim if there be but two, and into the inner and outer faces also if there be four. Even better than this is the use of wrought-iron prisoners which are inserted when red-hot into recesses in the rim, so that their contraction on cooling shall draw the joint together with a force which is measured by their cross-section. These prisoners may be of sections of an I, or they may be of the shape of an oval link. The recess which they fit enables them to be hammered solid while hot, and their projection or hold upon bosses in the recess

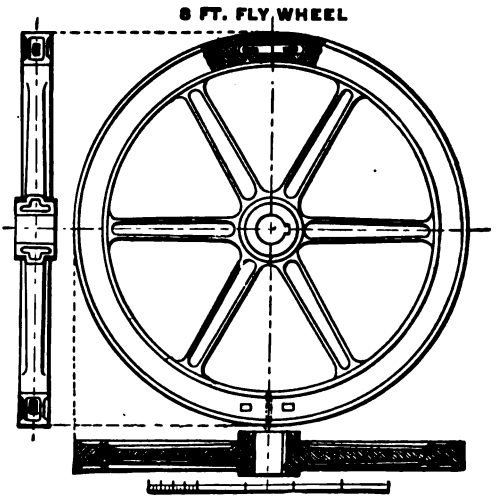

FIG. 291.

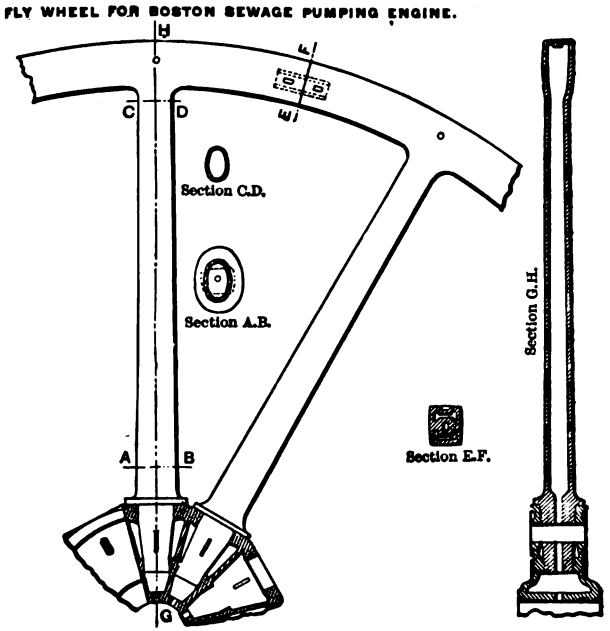

FIG. 292.

forms the joint. Fig. 291 shows a two-part fly-wheel with interior prisoner, and Fig. 292 a segmental wheel.

187. Fly-band-wheels.—When the fly-wheel is to serve as a belt-wheel or in rope-driving, the rim requires it to be wide rather than deep radially. Such wheels moreover will usually be of large diameter, since the linear speed of the flexible material used in driving should be high. Such band-wheels can be made either by the segmental method shown in Fig. 182 or (which is perhaps more usual) the joint between the segments will be made at the ends of the arms. The arms will be cast solid with the hub and form a spider, and each arm will end in a sort of pad, which will form the bearing-surface for the bolts which unite the ring-segments to the arms and to each other. Such band-wheels have no initial strains from cooling.

188. Composite Band-wheels.—Where great width of face is required, more than one set of arms becomes necessary to prevent a side flexure from unequal tension at different parts of the drum. The unnecessary weight of rim caused by the necessity for width if cast iron is used as material for the wheel has resulted in the construction of many wheels recently in which cast iron is either abandoned or used only incidentally. References to these are made in the notes, but it may be said that first is the use of wrought iron or steel spokes to withstand tension; next, the use of wood built up in segments for the rim with a cast-iron hub and arms; and last of all, the use of steel plate. This latter is either used flat or dished as a central web, and the rim is built up of the necessary number of plates, laid edgewise if the wheel requires no face, and laid tangentially if a wide face is required. Mass and strength has been gotten for the rim by the use of iron or steel wire wound around a cast-iron or other rim with sufficient tension to withstand centrifugal force and supply the mass desired.

189. Conclusion and General.—Marine engines require no fly-wheels, or rather the water-wheel and propeller serve this purpose. The locomotive requires no fly-wheel, since the

driving-wheels and the living force of the engine and train serve this purpose. When there are two cranks at 90°, or three cranks at 120°, the weight of the fly-wheel diminishes rapidly. For rough work in furnaces, rolling-mills, and elsewhere, with quartering cranks a fly-wheel is often dispensed with.

Most fly-wheels of large engines have notches formed in their face to make convenient places in which a bar can be inserted in order to pry them over the centres if they should be caught there. Marine engines have usually special attachments of screw and worm-wheel driven by a small donkey-engine for turning them over in port for purposes of inspection and repairs.

Geared fly-wheels revolving faster than the engine-shaft have been proposed and used. When driven by belts they offer the advantage of compactness, and where the driven machinery turns faster than the engine they can apply their regulating effect more directly. They have been proposed as means of storing energy in central stations and upon railways with very steep gradients. The difficulties are those due to their friction even with roller-bearings, and the relatively small amount of energy which they will store.

CHAPTER XVIII.

PIPING FOR THE ENGINE AND ITS ATTACHMENTS.

190. General. Throttle-valve.—In the previous chapters the construction or erection of the engine has been discussed up to the point at which the energy resident in steam at high pressure is to be conveyed to the engine in order to run it. The waste or exhaust steam must be conveyed away from the engine, and the water which results from condensation must be disposed of or provided for. This gives rise to a division of the power plant of some importance and to which careful attention should be paid.

In most cases the throttle-valve is furnished by the builders of the engine with the necessary finished flange to bolt it to the steam-chest. The erector of the engine must connect this throttle-valve by suitable piping to the boiler, connect the exhaust to the condenser or the open air, and connect drips either to the condenser, to the hot-well, or to outfall drainage, as the individual conditions may indicate. With respect to the throttle-valve it may be said that its primary requisite is to offer least resistance to the passage of steam when open, and to close absolutely tight against the passage of steam when shut. In small engines it is usually a globe valve closing by a screw on its spindle and turned by a wheel. In large sizes it will be of the gate-valve pattern opened and closed similarly by a hand-wheel, or will be a balanced valve operated by a lever. The objection to the gate-valve is the difficulty in keeping it tight and in regrinding it after it has worn. This difficulty is much mitigated in some of the newer forms. It is convenient with the globe valve to have it stand with the under side of the valve towards the boiler. By this arrangement when the valve is shut there is

no pressure on the stuffing-box of the spindle, which lessens the danger from leakage and makes it easier to repack it when necessary. The convenience of this feature overbalances the disadvantage of having pressure tend to lift the valve rather than to hold it to its seat. Valves with removable faces are quite a little used, so that new contact-surfaces may replace those which are worn by use and abrasion. The passage of steam at high velocity carrying drops of water will erode metallic surfaces with surprising rapidity. The throttle-valve of river-boat engines is usually a pivoted disk-valve. The disk of elliptical shape is mounted on an axis coinciding with its short diameter, which comes out through the side of the cylinder which forms the casing. The edge of the elliptical valve is bevelled so as to fit the cylindrical casing and form a steam-tight joint at the edges. Such a valve will be in equilibrium of pressure on both sides of the axis, and is consequently balanced. When wide open it stands in the plane of the axis of the pipe and practically offers no resistance to the passage of steam. The difficulty from the tendency to flex restricts its use to comparatively low pressures. The locomotive throttle is usually a balanced poppet-valve with two seats. This arrangement is a necessity with the high pressures used in this class of engine and where quick operation of the valve is demanded.

191. Steam-pipe.—The diameter of the steam-pipe is determined usually by the builder of the engine by the size of the throttle-valve which he furnishes. The area of its cross-section should be large enough to prevent loss of pressure caused by friction of the steam in the pipe, and experience shows that this is secured when the linear velocity of the steam in the pipe does not exceed 100 feet per second or 6000 feet per minute. The loss by friction in ordinary lengths at this velocity is inappreciable, and if the pipe is short and straight, and there are good reasons to justify the practice, the engine will work satisfactorily with high-pressure steam having a velocity of 8000 feet per minute. Knowing the volume of steam which the cylinder requires per minute, the

cross-section of pipe is easily found or checked. It is desirable to use no larger pipe than is necessary, on account, first, of the cost of pipe and fittings, second the weight, and third the increased loss from radiation from the unnecessarily large surface.

Usual diameters of pipe will be of the ordinary standard lap-welded wrought iron. Large diameters above that which can ordinarily be commanded will be of steel—lap- or butt-riveted. Cast iron, which has been much used in the past, is little thought of for high-pressure work by reason of its weight when strength is required, and its unreliability under the strains of unequal temperature and cross-bending with expansion. Cast iron is still used to some extent for fittings (elbows, tees, and the like), but even for these, steel castings give so much better and stronger results as to be preferred. When special fittings are made for bends or branches they should be made with long easy sweeps rather than the close bend usual in standard fittings. Some excellent results have been gotten from wrought-iron and steel bends welded or riveted. Where wrought-iron pipe of large diameter is required the lengths cannot be joined with the ordinary coupling, but must be flange-joints. These flanges will be steel castings into which the pipe will be expanded rather than screwed and the successive lengths will be joined by bolting the flanges together with a gasket between. For low pressures rubber asbestos-board and combinations involving graphite will serve, but with the higher pressures the gasket should be metallic. The softer or fibrous joints are easier to make, but they blow out when they have become hard by heat, and cause leakage and annoyance. The metallic gaskets are flat rings of corrugated copper, or of some soft metal or alloy, which will be squeezed by the bolt-pressure into intimate contact with the flange-surfaces. With faced flanges excellent results are secured by cutting rings in the face, into which the material of the gasket is pressed.

In marine practice where deck-beams and general contraction of space introduce many corners, and great flexibility

must be provided, copper steam-pipe is much used. This is either made by taking sheet copper, bending it into a cylinder and brazing the joint, using brass as a solder, or the pipe is drawn or is made without a seam by an electrolytic process. The copper in this latter plan is deposited upon a former in the desired shape by a successive deposition until the required thickness is built up. The pipe is then hammered to insure thorough ductility and homogeneity, and the necessary flanges are brazed on. Copper lacks the tensile strength of steel, so that greater thickness is required; but it has recently been proposed to incorporate a winding of steel wire into such pipe to give strength while retaining flexibility and ductility. Copper pipe expands and contracts without injury to itself, and resists corrosion better than iron or steel.

In large steam-plants where numerous boilers supply many engines through a common steam-pipe, the steam-pipe becomes the most vital part of the plant. Boilers can be shut off for repair and duplicate engines are at hand in case of accident; but if the pipe needs to be repaired, the steam must be shut from it, and the whole plant must stop. For these reasons some of the largest power plants have the pipe also in duplicate, so that any boiler may furnish its steam to either pipe, and any engine get steam from either pipe.

The steam-piping for compound or multiple-expansion engines usually includes a by-pass connection with a controlling valve leading from the main steam-pipe either before or after the principal throttle-valve—usually before—to the second cylinder in the series. The object of this by-pass is to enable the engine-runner to get steam past the first cylinder in case the latter should be stopped with the distributing valve covering the ports so that no steam can enter the high-pressure cylinder, or because it is stopped on the centre. In cross-compound or triple engines, if the first cylinder is on the centre the second is sure not to be, so that by turning steam directly into that latter cylinder the engine is started and the first cylinder put in position to receive steam in

proper succession. In the compound locomotive with two cylinders the intercepting-valve does this automatically.

192. Expansion of Steam-pipe. Expansion-joints and Hanging.—The steam-pipe is connected cold or at the temperature of the atmosphere. In service it is heated to the temperature of the high-pressure steam passing through it, probably in excess of 300° Fahr. The coefficient of expansion in wrought iron seems to be about .000006 of its length for one degree Fahr., according to recent investigations, so that for 300° and several hundred feet of length the expansion

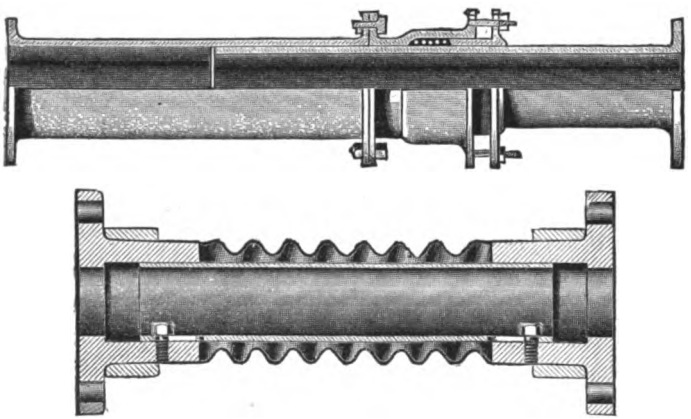

FIG. 300.

will be a considerable quantity. Different methods may be used to provide for this expansion. The first is to arrange the pipe so that wherever there is a change of direction there is also a change of plane. This is particularly convenient in comparatively short lengths, and the change of length is taken up in torsion and bending and not in a severe cross-strain upon fittings. Where this is not convenient and the straight lengths are too great, what are called expansion-joints are inserted. These are of two types. The first is called the slip-joint, shown in the upper part of Fig. 300, in which one end of the length carries a stuffing-box with gland, and the other end a brass sleeve which slides steam-tight in and out of the stuffing-box as the pipe expands or contracts. These slip-

joints are troublesome from leakage when the packing deteriorates, and from a tendency to seize and become hard and fast from corrosion and defective alignment of the pipe. Care must be taken also that the pipe is not allowed freedom of movement sufficient to blow the slip-tube out of the stuffing-box from end pressure of steam within the pipe.

The second form of expansion-joint has copper bends to replace the usual elbows. The copper, by reason of its ductility, withstands considerable deformation. Corrugated brass or copper sections permit considerable changes of length on each side of them (Fig. 300).

The third form is used for high pressures and temperatures and consists in making a flexible flange-joint of steel plate or of copper of wide diameter. The pipe is expanded into the middle of this flange and the two edges are bolted or riveted together ringwise. The flange opens and closes like a bellows

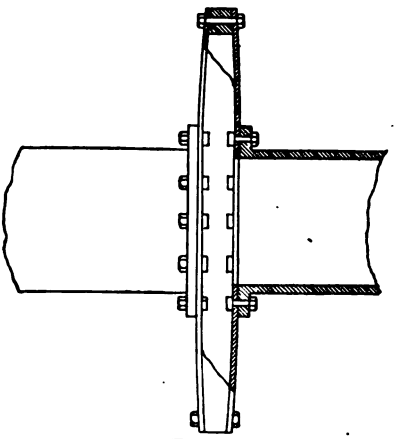

FIG. 301.

under changes of length (Fig. 301). This same type of expansion-joint is used in river-boat engines to connect the side pipes to the upper steam-chest, which is a part of the cylinder-casting.

The changes of length in the steam-pipe require that in hanging it provision be made for considerable motion lengthwise. The simplest method is to suspend the pipe by rods long enough to allow them to swing as the pipe moves. If

this is inconvenient, a species of roller-bearing may be used, such as shown in Fig. 302. The hanging must not permit the pipe to be cramped in its tendency to move.

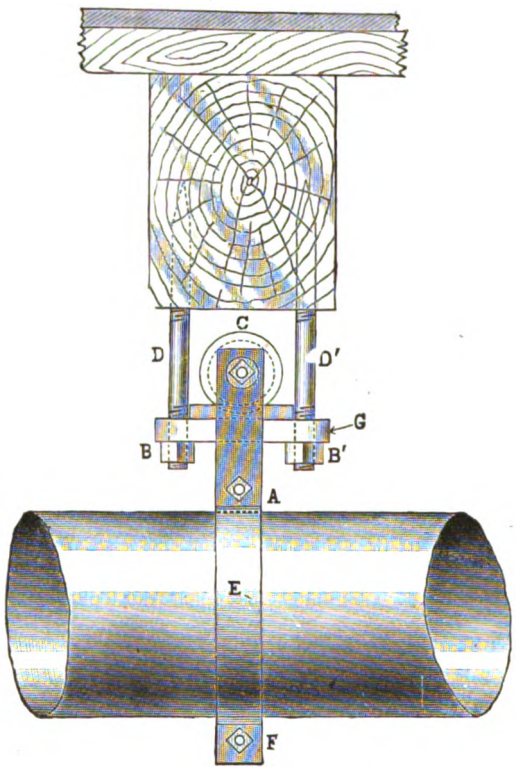

FIG. 302.

193. Grading of Steam-pipe.—Experience shows that when steam is moving in a pipe at high velocity it is impossible for water of condensation to move against it. It will even be carried along in a vertical pipe. Hence the steam-pipe should be graded downwards towards the engine from the boiler, and provision must be made near the engine to catch or dispose of this water. Trouble is often made in pipe systems using the ordinary fittings where outlets are made in the plane of the axis of the fitting, by reason of accumulations of water below the level of such outlets. Such pockets

are the occasion of noise from the phenomenon of concussive ebullition under certain conditions of heat and pressure; but worse than this, the water is sometimes lifted bodily out of the pocket with the steam-velocity, and considerable masses of it fetch up against an abutting surface upon which they strike a smashing blow which it may not be able to withstand. Such pockets should either be carefully drained, or, better still, a special, form of fitting should be used, such as shown in Fig. 303 in which the condensation will flow out of the main

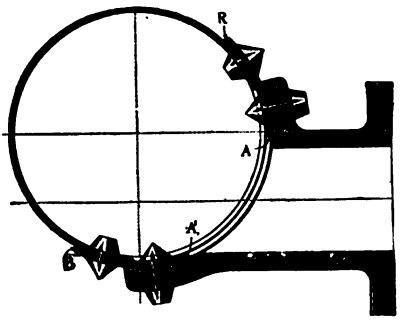

FIG. 303.

pipe with the steam which flows through the branch. A few pounds of water moving several hundred feet with a velocity of nearly a mile a minute, represents a mighty store of energy and is capable of most disastrous results. The presence of water in such pockets is also the occasion of mechanical erosion of the pipe similar to the action of the sand-blast, and ample provision must be made to get rid of even small accumulations.

194. Drainage of Steam-pipe.—To get rid of accumulations of water drawn mechanically or entrained by the steam from the boiler and those which result from condensation a number of different methods may be used.

The first is to tap into the pipe, wherever pockets and elbow-joints occur, small pipes with the necessary valves which can be left partly open and draw off water as fast as it gathers. These pipes may all converge towards a closed reservoir or tank from which the accumulated water may be pumped

back into the boiler. These drip-pipes will vary in size with the quantity of water to be taken care of, but nothing is gained from having them too small, since they are likely to become clogged and inoperative. From one-half inch to one and one-quarter will be the usual range, according to the size of the pipe and engine.

The second method is to diminish the losses of heat from the flowing of live steam through such tubes by the use of a steam-trap. A steam-trap is a pot within which is a device which is usually intended to act upon a valve or opening

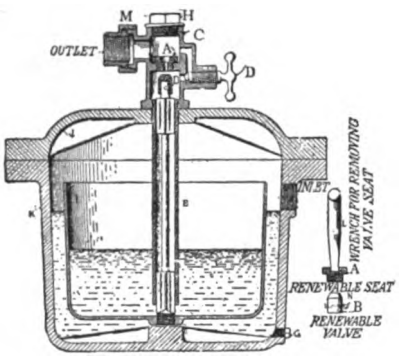

FIG. 304.

when water is to pass through it, but to refuse to act when water changes to steam. This result is secured in many ways in different designs of trap. The simplest plan is to have the trap inclose a float which is acted upon by water and raised, but which falls in steam. It will be seen that when the drip-pipe connected to the trap is filled with water, the float will lift and open the connection through which that water can escape. When trap and pipe are emptied of water the float will fall, closing the outlet from the trap, and shutting off escape until the trap is again filled. The discharge from these traps may either be back into a closed tank to be pumped into the boiler, or it may be wasted into drains (which is not to be commended). Many traps instead of using a float are operated by differences of expansion of one or two metals in steam and water.

The third method is to introduce a receiver or catch-water tank in the pipe close to the engine into which all condensation shall be made to flow, and out from which only dry steam will go to the engine. Such a receiver may be a pipe (Fig. 305), or a simple vertical cylinder of boiler-plate, into the

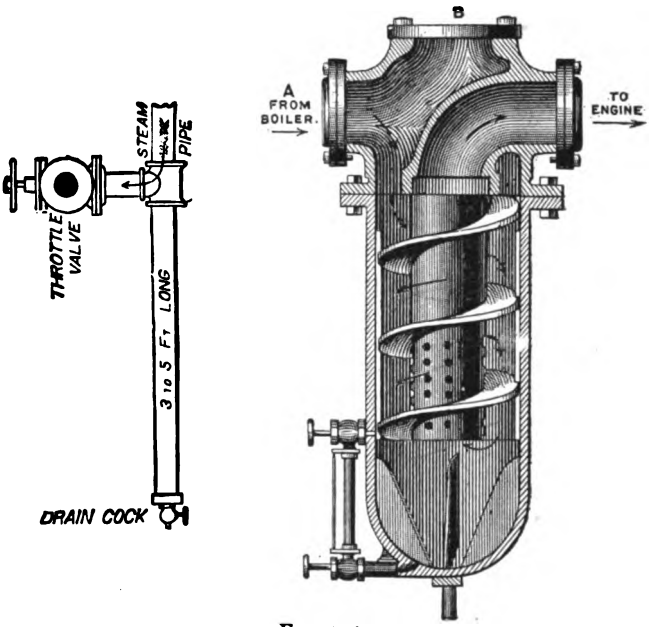

FIG. 305.

top of which the steam-pipe enters and passes down part way. The water which is carried by the steam falls to the bottom by its inertia or by gravity, and will there be taken care of either by a drip-pipe or by a trap. The steam going to the engine leaves the receiver from a point near the top, and the enlarged diameter which diminishes the linear velocity of the steam prevents the outflowing current from drawing out the entrapped water. A glass tube can be attached to the side of the receiver so that the level of the water caught in it can be easily observed and its discharge governed accordingly (Fig. 306).

The fourth method is easily derived from the foregoing.

It is the use of a separator to withdraw by mechanical means water which the steam has entrained. There are several forms of such separators. One of the most successful ones is shown in the right-hand part of Fig. 305, and its method of application is obvious. It will be seen that the principle involved is that of giving a spiral or centrifugal motion to the water and steam as they enter the separator. The superior density or weight per cubic inch of the water causes it to yield most strongly to this centrifugal tendency, and it goes to the outside of this chamber, while the lighter steam being less affected by this tendency, will remain nearer the centre, from which the outlet to the engine is taken off. The presence of metallic-surface perforated deflecting- or baffle-plates and similar constructions increases the efficacy of the separator, since water divided in drops has a tendency to attach itself by capillary action to such surfaces.

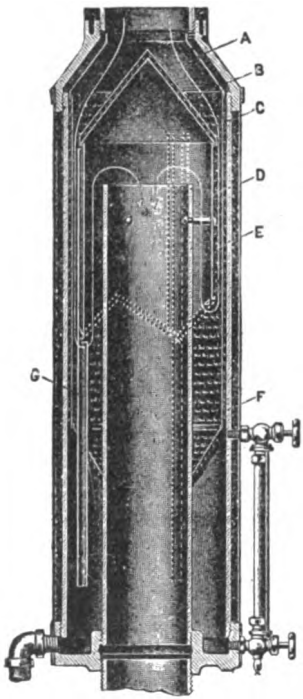

FIG. 306.

The separator requires to be, in the form shown, of a diameter at least twice that of the pipe, and the depth or length at least three or four times its diameter. The larger the separator the more efficient, since it combines in this case the natural separation by differences of specific gravity with the mechanical separation by centrifugal action. The separator acts as a receiver when accidental quantities of water are thrown over with the steam. With reasonably dry steam (having five per cent of water in it or less) an effectual separator should allow less than one per cent of water to pass it and reach the engine. The discharge from the bottom of the separator may be taken care of by a trap, or it may be freed by hand as above described. Fig. 307 shows a cen-

trifugal separator for a horizontal line of pipe. The heavier water is thrown radially and caught in the receiver below.

An exceedingly clever substitute for the trap has been

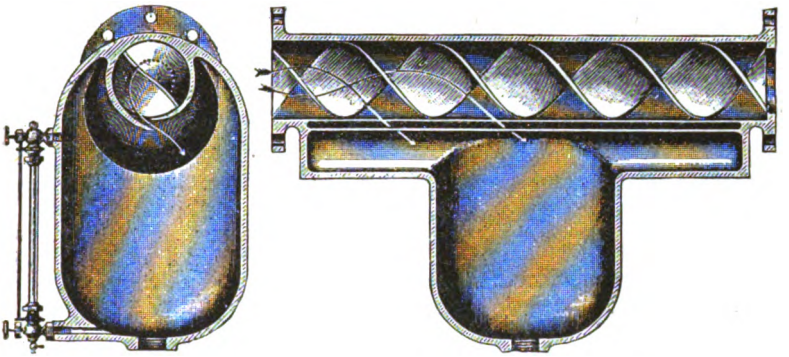

FIG. 307.

recently worked out for this purpose in places to which it can be satisfactorily applied. It is called the steam-loop and is shown in Fig. 308. The pipe from the bottom of

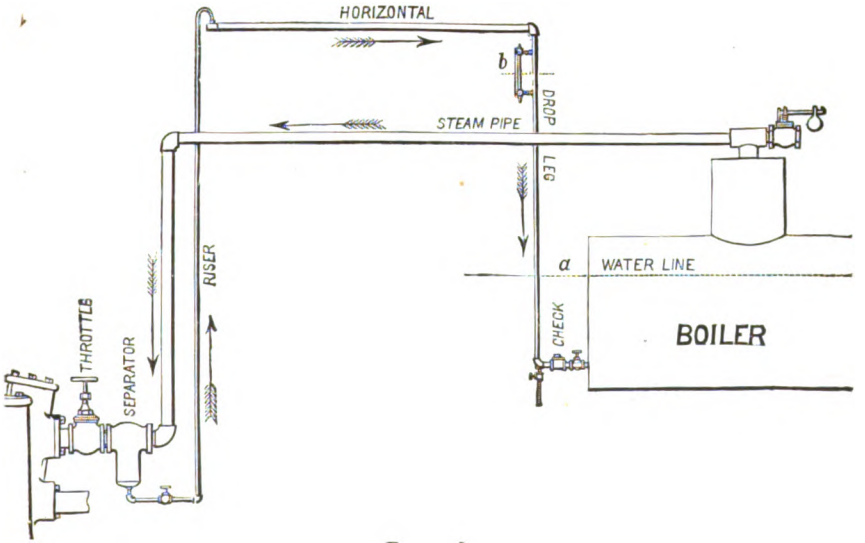

FIG. 308.

the separator becomes a species of siphon, whose length of leg is depended upon to move the water in it by the differences of density of the water in the two legs. In the

drop-leg of the loop, which is connected to the boiler below the water-line, the water is comparatively still and solid. In the other leg or riser the water is mixed with steam in bubbles ascending up through it, and this difference in weight will maintain a continual discharge into the horizontal member, which is slightly graded towards the boiler. The steam-pressure is nearly in equilibrium at the level of the water-line through the system, but the weight of solid water in the drop-leg gives the dynamic head to feed the condensed water continuously from the drop-leg into the boiler.

195. **Non-conducting Coverings.**—If the surface of the steam-pipe were left bare with hot steam within it, the currents of air circulating around the pipe would convey off a great deal of heat by contact, and the pipe furthermore would radiate heat to surrounding objects. Both of these would cause condensation of steam and loss of pressure, and would add to the discomfort of those who are compelled to work in the engine-room. It is therefore universal to cover the surface of the steam-pipe with some material which shall keep air-currents from the pipe and shall resist by its properties the tendency of the pipe to radiate. These two requirements must be kept in view in selecting the material to be used. The material must furthermore be resistant to combustion and deterioration under heat, and must give off no disagreeable odors. It must be easily applied, must be cleanly and not attractive to vermin, and it is desirable that it be so made that repairs and alterations to the pipe may be made without destroying the non-conductive covering and making its renewal necessary. These latter conditions point to the use of what are called sectional coverings.

Since air undergoes no heating by radiation, but is heated by contact only, it has been found that materials of such porous or fibrous character as to shut in or occlude a considerable quantity of air, finely subdivided, make the best non-radiating coverings. The air is easily heated by contact, so that care must be taken to prevent this air from circulating, and it is best to keep it from actually touching the pipe. These peculiarities form the basis for the excellence of many

combinations which use hair-felt. The porous or fibrous quality of the hair-felt holds a large quantity of air while circulation is precluded, and injury to the hair is prevented by first wrapping the pipe with asbestos-board. The hair is held in place by a canvas covering sewed over it, and if desirable bound by sheet brass or nickel-plated rings for appearance' sake. The fibre of asbestos or of blast-furnace cinders comminuted by blowing air or steam through it while fluid, and known as mineral wool, possesses the same qualities as hair-felt, and for the same reasons. Other materials of successful use as non-conductors belong to the class of the earths. Infusorial earth largely composed of the silicious shells of minute diatoms, magnesian earth, ashes, and the like, made into a plaster with some binding material like asbestos-fibre or hair, form a group of non-conducting coverings often to be met with and which form the plastic class. The sectional coverings or removable coverings are combinations of asbestos-paper, hair, and canvas moulded into split cylinders which are sprung on over the pipe, closed together, and held by decorative bands. References to the efficiency of these and other non-conducting coverings will be found in the notes. It is apparent that to increase the thickness of the coverings in order to diminish loss of heat through them is to increase the cost of such coverings and the weight of the pipe. The presence of the covering compels the hanging appliances to adjust themselves for expansion without disturbing the covering.

196. **Exhaust-pipe.**—In non-condensing engines the exhaust-steam should escape from the cylinder with the least possible resistance from friction or bends in the pipe which conveys it away. Such resistance is continually a subtraction from the effective power of the working stroke. For this reason it is usual to make the exhaust-pipe for a given engine a little larger than the steam-pipe in the proportion that the velocity of flow in it should be about two thirds that in the steam-pipe, or at a rate not exceeding four thousand feet to the minute. In small engines this is readily secured by having the exhaust-pipe one size larger than the steam-pipe. In condensing engines the exhaust-pipe will be short and usually

direct, and where this is the case the vacuum will be established in the exhaust-pipe as well as in the condenser. In non-condensing engines the pressure in the exhaust-pipe will be that of the atmosphere, or at most a pressure ranging from that up to three pounds per square inch. Hence it need not be of the same strength as the steam-pipe, which explains the use of spiral riveted or spiral welded pipe in long lengths (Fig. 309). Lightness and cheapness are thus secured. In city conditions the exhaust-steam must be taken to the roof of buildings or factories to be discharged, which compels a considerable ascending length of pipe. In power plants where this does not have to be considered the engine may exhaust into the open air at its own level. Where the noise of the exhaust is of no consequence as it escapes into the air, the end of the pipe may be bare. Where noise must be prevented, and where the discharge of condensed water in the exhaust current carrying oil from the cylinder is objectionable or harmful to roofs or structures, provision must be made to meet both of these difficulties. This is done by what is called an exhaust-head. Fig. 310 shows typical arrangements of such an appliance. It is like a separator in principle. The water and oil striking the deflecting surfaces are caught by them and drop downwards, and are carried away by the drip-pipe, while the steam is discharged over the large area of the base of the inverted cone with so reduced a velocity that its escape is noiseless. Similar reduction of velocity is also to be secured by baffling the dis-

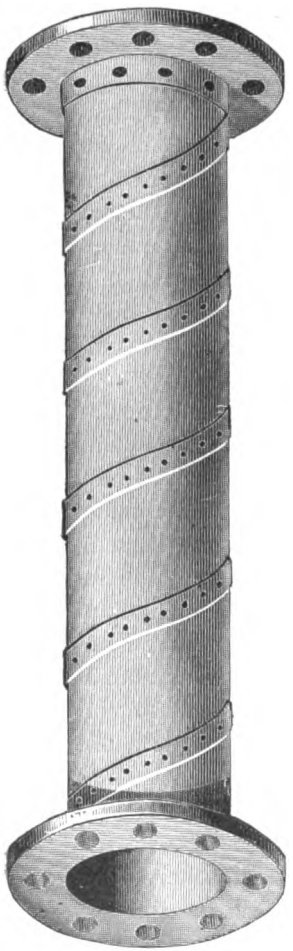

FIG. 309.

charge by perforated diaphragms, wire netting, layers of balls, and the like.

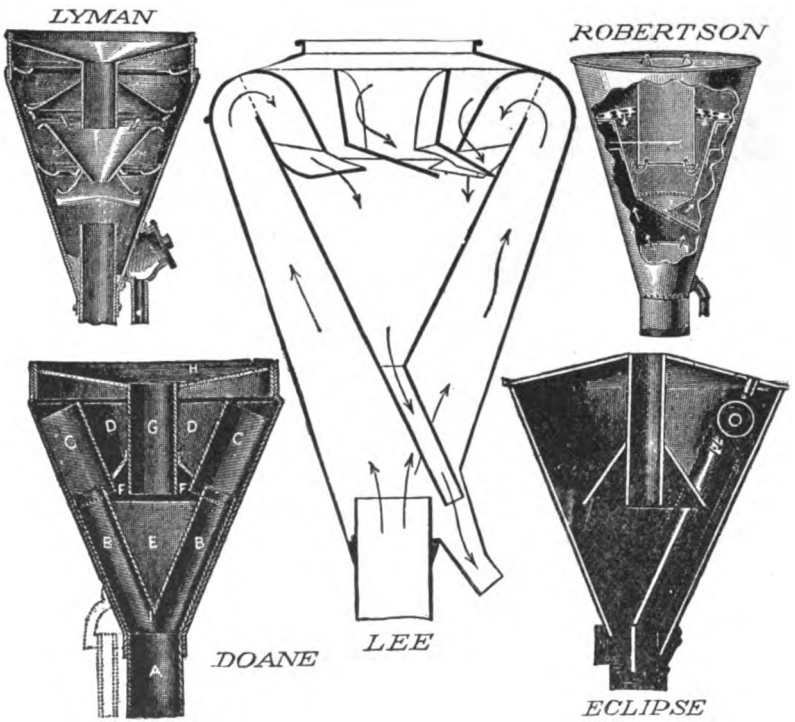

FIG. 310.

197. Oil-extractors.—In non-condensing engines with an exhaust-head oil descends through the drip-pipe with the condensation, and can either be caught, if valuable, or discharged to waste, if valueless. In condensing engines the lubricant used in cylinders and valve-chests will pass to the condenser and hot-well with the steam. Part of it will be caught in the surface-condenser, which it will foul and in which it will give trouble, and that which goes to the hot-well will be pumped from that well into the boiler, where again it will cause great annoyance. It does not pass out with the steam, but remains behind accumulating in quantity as the interval between cleanings of the boiler is larger. It will be seen in due course (par. 339) that its presence is a continual danger causing local or general overheating, making the plate corrode and an in-

ternal boiler-furnace to become deformed. It is in every way desirable to extract the oil from the exhaust before it enters the condensing appliances. This is done in many ways by what are called oil-filters or oil separators. Their principle is to catch the oil upon the extended surface of some material through which the steam will pass but the oil will not. Hay or straw, compressed sponge, or sand in a tight

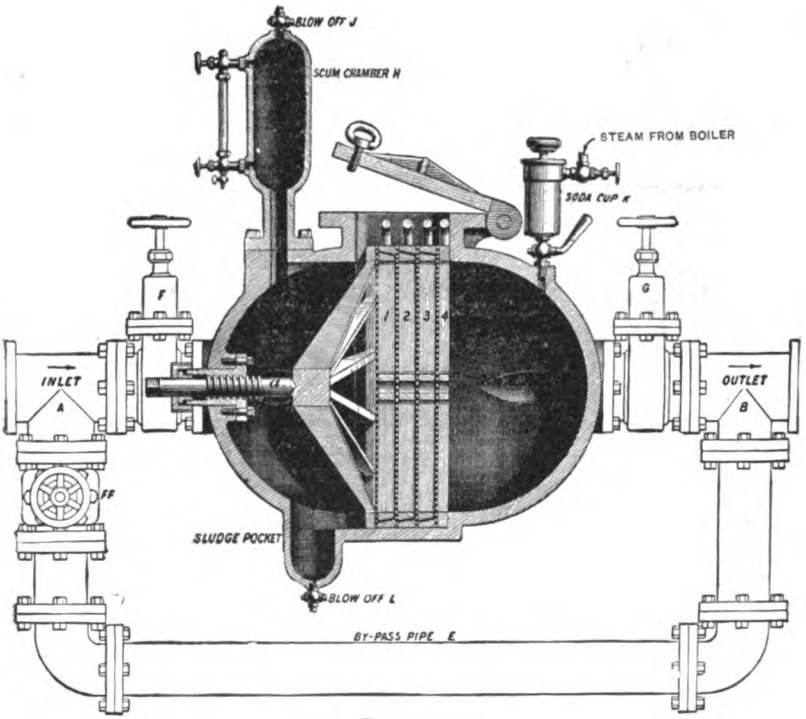

FIG. 311.

box represent types of such oil-filters which are cheap but troublesome from the necessity for frequent renewal of the filtering material. Fig. 311, showing the Edmiston oil-filter, presents a type of apparatus using cloth as the filtering medium. The advantage which this type offers is the comparative ease with which frequent renewals of the filter can be made. Figs. 312 and 313 show forms of separators designed to separate oil from steam by catching it upon

metallic surfaces to which it shall be held by capillary action until enough accumulates to drip off into catch-pockets.

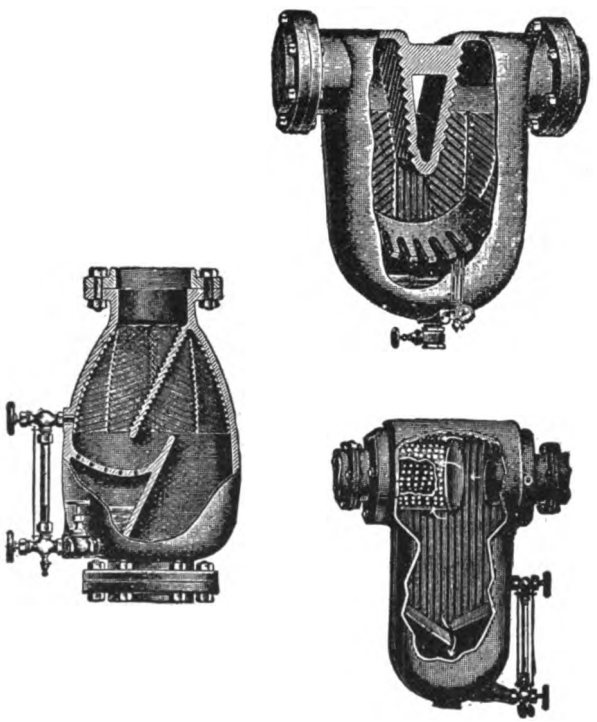

FIG. 312.

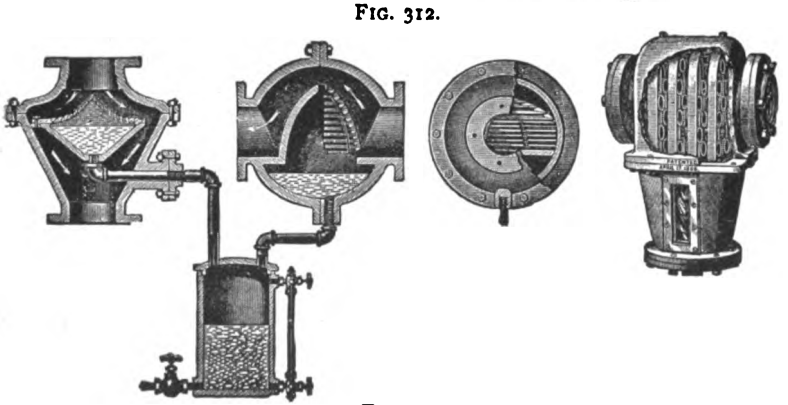

FIG. 313.

They work with cold or wet steam, but not with hot or high-pressure steam, which seems to divide the oil so finely that it

runs through such separators without catching upon their surfaces.

Chemical means using alum for coagulating and eliminating the oil are open to the objection that they need continual care and superintendence to secure efficient working.

198. Drip-connections.—In non-condensing engines with the valve-chest on the top of the cylinder, the outlets from the cylinder-cocks require to be piped to the waste- or drainage-outlets. Such connections will carry through them more or less oil, so that they should not be too small. The steam-pipe which descends to the engine from an upper level should have a pocket close to the throttle-valve at the bottom, from which a drip should be connected so that the steam-pipe can be thoroughly heated and freed from water before the throttle-valve is opened. This can be a smaller connection, since only distilled water is to pass through it. The third drip-connection will be from the lowest point of the exhaust-pipe either where it leaves the engine, or at the elbow where it starts to rise towards its roof-outlet, or at both points. This drip will have to take care of some oil, and consequently should be large enough to be in no danger of clogging. These several drips should each be controlled by its own valve, usually a globe valve, which can be easily operated by its hand-wheel when hot. Drips from the cylinder may be dispensed with in engines having the valve-chest on the bottom or at the bottom of one side, if the distribution by the slide-valve is such that the exhaust-port can be used as a drip-connection clear to the end of the stroke. Many engines have the distibuting valve capable of lifting from its seat by pressure underneath it so that an excess of water may find vent in this way. With positive pressure-plate valves this cannot usually be done (see pars. 103, 104). Where drainage from the cylinder goes out at the exhaust, special care must be taken to have the exhaust-drip generous and effective. In condensing engines the same drainage or drip-connections for the steam-pipe must be provided, but in most cases no cylinder-drips are needed, since condensed water will pass out to the exhaust by vaporization, and by gravity in cases where

the condenser is below the cylinder, as is usual. With gravity condensers drips must be used, but must be operated with care, because after the vacuum is created they will work backward and mar the vacuum. In condensing engines the drips can profitably be connected to the hot-well, so that the warm water which they discharge will be pumped back to the boiler instead of being wasted.

In compound or multiple-expansion engines, besides the drip from the steam-pipes and the high-pressure cylinder going to the hot-well, there will need to be provision for draining the receiver between the cylinders. There should not be fluctuation of pressure sufficient to vaporize hot water entrained or condensed in the receiver, nor is it advisable to allow such vaporization to take place. Hence the receiver of such engine will be piped from its lowest point to the hot-well and with a trap in its connection. In jacketed engines the water of condensation accumulated in the jacket must be drained off by proper pipes. Where it is possible to do so the jacket-drains should return their condensation to the boiler by traps direct rather than to suffer the loss of heat caused by the drop of pressure in passing into the hot-well. This is a measure which tends as well to making the engine efficient. A recent successful design of triple engine has the steam for the independent air-pump taken from the drip connections of the jackets. Circulation is maintained through the jackets, and no waste occurs.

199. Sundry Connections and Attachments.—The piping necessary for the proper working of an exhaust-steam feed-water heater, the piping for the lubricating appliances, the heater itself, and the lubricators will receive discussion under the subdivision in a later chapter in which they properly fall. The same is true also of the gauges and apparatus of their class which form a part of the engine-room equipment.

200. Summary.—It has been the desire and intention to review the construction and appliances which are to be expected in a power plant so far as relates to the modern engine in the foregoing chapters which have covered the engine subdivision. In the succeeding chapters the boiler and furnace, the setting, and accessories are to be similarly considered.

CHAPTER XIX.

THE STEAM-BOILER. GENERAL CONSTRUCTION.

201. Introductory.—By reference to pars. 2 and 5 it will be seen that the energy resident in a fuel or source of heat has to be liberated by combustion in a furnace, and that this energy thus liberated is to be stored in a suitable vessel or reservoir from which it may be drawn off as required. The foregoing chapters have treated of the energy communicated to the engine through a steam-pipe, and the next series of chapters is to treat of the generation of pressure and its storage in the vessel which is called the boiler. Two points of view are therefore of prime importance in viewing the steam-boiler. The first is economy in the liberation of energy from the fuel and the generation of pressure in the boiler. The second is safety in the storage of that heat-energy. Economy may be expected from three points of view. First, economy in first cost of the boiler and its appurtenances and in the setting which it may require. Second, economy in the combustion of the fuel or in the number of foot-pounds of energy derived from the heat-units resident in the fuel. Third, economy in maintenance and repairs, in which would be included depreciation from use and age. The safety in storage is mainly against rupture, whereby injury is done either to person or property from hot water or steam escaping in quantities, or by the sudden release of the stored energy all at once producing the disaster which is called a boiler-explosion.

202. Shapes for Steam-boilers.—Since the steam-boiler is to withstand pressure from within, equal in every direction, the shape which is at once suggested for such a reservoir of pressure is the sphere. The fluid pressure being normal to

the enveloping surface is decomposed equally in every direction when that envelope is a sphere, so that there is no tendency for a spherical boiler to change its shape or undergo flexure. The normal strains are opposed by the tensile resistance of the material used. Early historic forms of boiler present the sphere as a shape underlying what have been called the balloon and haystack boilers. The difficulties of construction due to the double curvature of the plates required in a spherical boiler, and the fact that the sphere is not adapted to receive heat which is to be transferred to the water from the fire, have been reasons why the sphere is no longer used except in aggregations of small spheres in boilers of the sectional type.

The cylinder when strained in a plane perpendicular to its axis offers the same advantage as the sphere. Fluid pressure from within does not tend to change its shape. The ends of the cylinder may be either flat or curved, and if curved they may be concave inward or outward. The flat head or end tends to bulge by internal pressure, and will keep on bulging, if the material will allow, until the end surface has become hemispherical. When this happens the spherical decomposition of the forces is restored and no further deformation takes place. If the head is concave outward, it receives internal pressure like a dome; and if deformation is prevented, it resists like the hemispherical-ended boiler with the material of the head in compression instead of in tension. The hemispherical-ended boiler has been somewhat used and is called the "egg-ended" boiler. The sheets which make the head are troublesome to form, however, and it is little used in America. The flat head is almost universal, and is practically a necessity where flues or tubes are to be attached to it. Such flat heads require to be stayed or braced to prevent bulging. The cylindrical shell and flat-stayed head will be found to be by far the most widespread shape.

203. Materials for Steam-boilers. Copper and Cast Iron.—The requisites of a proper material to withstand the elastic tension of the steam-gas are sufficient tensile strength

and a ductility to enable it to withstand such strain without breaking. In addition to the stretch caused by internal pressure the material forming the envelope of the gas must resist the strains caused by heat. These strains are not only those caused by expansion, but more trying than these are the strains due to sudden contraction in the structure when cold water is introduced to supply the steam withdrawn, and when cold air impinges upon a hot surface from the opening of a furnace-door or through defects in the setting.

The five materials used about boilers and entering into their construction are copper, brass, cast iron, wrought iron, and steel. The advantages of copper are:

1. It has a high conductivity for heat, so that the heat of the burning fuel is transferred rapidly to the water which is to be transformed into steam-gas.

2. Copper plate is uniform and free from local defects and highly ductile. This makes it yield to sudden strains without danger of rupture.

3. This ductility makes copper plate easily shaped. The early boilers made before tools were perfected were largely of copper for this reason.

4. Copper resists the corrosive tendency from the gases in the fuel and from certain kinds of water.

5. Scale due to precipitated mineral matter in the water does not adhere to copper as firmly as to iron.

The objections to copper as a material for boilers are:

1. It has a tensile strength of only 32,000 to 33,000 pounds per square inch, while wrought iron has over 40,000 and boiler-steel has about 60,000. This makes copper boilers thick if they are to be strong; their thickness makes them heavy, and their weight makes them expensive. Modern boilers use copper plate only in the fire-boxes of locomotive boilers, where they can be strongly stayed so as to receive strength from the staying.

2. Copper is too soft to withstand mechanical injury in fire-boxes from the firing-tools used by the fireman in handling his fire. Where copper is used in tubes, as in fire-engine prac-

tice and in foreign locomotive practice, the abrasive action from sharp cinders drawn rapidly through the tubes by the forced draught wears them rapidly and makes them thin.

3. Copper loses its strength as the temperature rises. At 500° Fahr. it loses 25 per cent, and at 800° it loses 50 per cent, of the strength while cold.

4. Where copper is used in connection with iron or steel shells in waters containing even dilute acids, the combination makes a galvanic couple, and the iron or steel, having the lower potential, undergoes corrosion and waste.

Brass is only used in tubes in boilers where rapid steaming and transfer of heat are of prime importance. Its advantages and disadvantages are the same as those of copper. Brass mountings about the boiler evaporating acid water will often occasion similar galvanic action.

CAST IRON as a material for boilers has the following advantages:

1. It is molded to its shape and poured from a fluid state. Any form can thus be secured.

2. Within limits it does not require to be joined by riveting.

3. It is cheaper per pound than the other materials.

4. The corrosive action of the fuel-gases does not waste it as rapidly as the other forms of iron.

The objections to cast iron are:

1. Its relatively low tensile strength. This will range from 12,000 to 20,000 pounds per square inch in ordinary grades, although a quality known as gun or car-wheel iron has a stength of 30,000 pounds per square inch.

2. Most of the cast irons are not ductile to any great extent, so that when they are strained they break suddenly and without previous warning. The sudden release of pressure by such a break is calculated to permit so rapid a formation of steam-gas as to cause the disaster called an explosion to follow the rupture.

3. This absence of ductility makes cast iron ill adapted to

resist sudden differences of temperatures. Sudden contractions make cast iron break.

4. Cast iron is liable to blow-holes which may escape the most critical inspection. Their presence inside a casting will cause an unsuspected weakness to resist strain.

For these reasons the use of cast iron is restricted in good practice to small parts of what are called sectional boilers and to fittings and mountings. Its use is diminishing even for these latter purposes. It should never be used where subject to rapid changes of temperature. It will be found in heads of domes to some extent by reason of the convenience which its necessary thickness offers for the attachment of valves and fixtures. The best sectional boilers will have little or no cast iron in their structure.

Malleableized cast iron, commonly called malleable iron, is sometimes used in sectional or coil boilers. The removal of carbon from the casting in the malleableizing process makes it tougher and more ductile than plain cast iron. It is open to the objection that the effect of malleableization may not be produced clear through the casting, making it unreliable or variable in quality. It also has not the same coefficient of expansion as wrought iron, which gives trouble when they are used together.

204. Wrought-iron and Steel Boilers.—By far the largest proportion of modern boilers, and all of those which have a cylindrical shell of large diameter, are made of wrought iron or mild steel. The advantages which are offered by wrought iron and steel as compared with other materials are their higher tensile strength with all necessary toughness, elasticity, and ductility. The tensile strength of good boiler-plate of wrought iron will be a little over 40,000 pounds to the square inch. For steel it is usual to specify that the tensile strength shall be not less than 55,000 nor more than 65,000. The inferior limit secures that steel of pure quality shall be furnished, and the superior limit precludes that strength being secured by adding excess of carbon, whose effect would be to make the steel harder and less ductile.

The improvements in the process for the manufacture of plates by the steel-makers have brought it about that wrought-iron plates of a quality suitable for boiler-making are more expensive than steel plates. This is particularly the case with boilers requiring thick sheets. The proportion of black-smiths who feel a confidence in their welded work in wrought iron rather than in steel induces many designers to prefer that braces, stays, and the like should be of wrought iron even when the shells are of steel. When iron plates were generally to be met, seven grades of wrought iron were recognized. The most inferior was called tank-iron, and was rolled from a pile made up of muck-bar. It was only rolled once, and had more or less cinder in it so that such quality of iron should never be exposed to heat. The second grade was called refined iron, and was made up of twice-rolled iron. The third quality was shell-iron, which might be used in parts of the boiler not exposed to the direct action of heat. These three grades were made up of any stock, and no specification as to quality or process was made. The fourth quality was charcoal number one, usually abbreviated to C. No. 1, in which the purer grade of iron supposed to result when charcoal was used for fuel for smelting it in the blast-furnace was to be used in the pile. The fifth was charcoal hammered number one, abbreviated usually to C. H. No. 1, in which not only was the charcoal-iron specified, but the ball from the puddling-furnace was to be treated for the expulsion of cinder under the hammer and not by a squeezer. The best grades were flange and fire-box iron, in which not only was selected material used, but in piling it for rolling a certain proportion of old boiler-plate was to be embodied in the pile and laid transversely to the length of the pile. This gave a toughness and closeness of texture when rolled twice or more so as to enable the plate to be bent at its edges or elsewhere without cracking. The repeated rolling and the use of purified stock made the plate more thoroughly homogeneous, so as to be able to withstand the intense heats of the fire-box or furnace in locomotive or other internally-fired boilers.

The objection to wrought iron as the boiler material is its tendency to laminate or blister or both. This tendency is caused by the separation of the component layers or leaves of which such plate is made up as a result of the piling process which wrought iron has to undergo. When the layers have not been thoroughly welded together, or, worst of all, when a layer of cinder unexpelled in working lies between two layers of iron, the transfer of heat through the plate is not perfect, nor the withdrawal of heat from the iron by the water. The consequence is that the outward layers between the fire and the defective weld expand more than the inner layers, whereby the defect is extended, and presently the outward layers bag downwards and separate from the inner layers. When this occurs the bagged portion is overheated most of the time and oxidizes. The bag or blister is thus a weak spot, and in time it becomes perforated or cracks. A blister may occur also in steel boilers from a blow-hole, and in any boiler as the result of local overheating caused by any grease or dirt.

205. Steel Boilers.—These special reasons lead to the use of steel, but the displacement of wrought iron for boilers is a result of other conditions besides the commercial or metallurgic one referred to above. These advantages are:

1. The greater tensile strength with the same ducility enables a lighter boiler to be used with the same strength or a stronger boiler with equal weight. The use of thinner plate diminishes the tendency to overheating at lap-joints, and favors a more rapid and effective transfer of heat to the water within the shell. Where heat is transferred by contact from hot gases passing from a hot fire-box over the metal of the shell and thus out at the chimney, it will be apparent that time enters as a factor in the process of absorbing heat from these causes. If the outward surface of the metal in the shell is kept cool by the water within the shell, it will withdraw heat from the gas more completely than if the plate is thick, whereby a greater difference of temperature has to prevail between the inner layer of the plate touching the water and the outward layer touching the gas.

2. The greater density of steel enables it to resist abrasion, and in some cases corrosion, better than iron.

3. The fact that steel is made from an ingot cast in a fluid state, and the plate is rolled down from this solid ingot, prevents the presence of welded surfaces which may be defective and cause blisters. This superior homogeneity of steel as compared with iron will also explain in part the more rapid transfer of heat through steel.

4. The rolling of steel plates from massive ingots by very heavy rolling-mills enables steel plates to be obtained of larger size than those rolling iron are capable of furnishing. The modern rolling-mills have a distance between housings of nine, ten, or eleven feet, which alone limits the width of plate which they can roll, while the length in the direction of the rolling is limited only by the weights and sizes convenient to handle. Sheets eight or nine feet wide and fourteen feet in length are easily obtainable, and thicknesses up to one and one-quarter inches are quite usual. Steel must be used for these considerable thicknesses when high pressures and large diameters demand them. It would be impossible to work a pile of wrought iron having sufficient initial thickness to finish at this final thickness and receive work enough in rolling to be of satisfactory quality.

The objections to steel have been its tendency to crack from a species of brittleness either at riveted joints or where it was bent in order to flange it. The difficulty is not with the steel itself, but with its selection or treatment. If steel too high in carbon is selected for boilers, it is liable to crack by reason of its hardness. Phosphorus in steel as an impurity will make steel brittle, but specifications can be drawn as to chemical constitution of boiler-steel which will prevent this difficulty. Cracking due to improper treatment may be prevented by having the steel annealed by heating and very slow cooling after it has undergone shearing, punching, and flanging. Annealing removes strains caused by unequal heating, and restores the ductility of a good quality of steel

if the latter has been destroyed from the blows or shocks of the shaping processes.

Some steels have given trouble from a more rapid corrosion than the wrought-iron boilers showed which were replaced by steel. Usually, however, other conditions were changed with the change to steel, and the general experience is that steel boilers last longer.

The steel used for boilers is usually open-hearth steel having the properties of iron or ranging less than .50 or one half of one per cent of carbon.

206. Testing of Boiler-plate.—The testing of the plate to be used for boilers should be very carefully attended to under all circumstances. The federal government have legislated in this matter with respect to all boilers engaged in the interstate trade at sea and in coast waters. They demand that every plate used in a boiler shall be stamped with the name of the maker, and with the tensile strength determined by a test in a proper testing-machine. Such tests are usually made upon a strip cut coupon fashion from the end of the plate. The shape of test specimens is specified and their behavior. Iron with a strength of 45,000 pounds is to show 15 per cent reduction, and steel 25 per cent of stretch in a length of 8 inches. The old demand when steel was first introduced was that the contraction of area in drawing down at fracture should be 50 per cent in plates one-half inch thick or under. Bending tests are also required, as a rule, to prevent the presence of hardeners such as carbon and phosphorus. For thicknesses of three quarters of an inch and under, the plate should bend double, both hot or cold, under a heavy hammer without showing cracks at the bend, and thicker plates should bend with a radius equal to their own thickness at the inside without distress.

207. Thickness of Boiler-plate.—The cylindrical boiler exposed to pressure on its inside tends to part along a roundabout or ring seam by pressure against the heads, and it tends to part along a longitudinal seam and open out into a flat plate. If the pressure on each square inch be denoted by P,

and the diameter of the cylinder be D in inches, the area exposed to pressure to blow out the head or rupture a ring seam will be the area of the head in square inches multiplied by the pressure on each square inch:

$$PA = P\pi r^2 = P\pi \frac{D^2}{4}.$$

The resistance to this pressure is offered by a ring of the boiler-metal whose area is

$$2\pi rt$$

when t is the thickness. If f be the tensile strength per square inch, the rupturing force just balances the holding resistance of the material when

$$P\pi \frac{D^2}{4} = 2\pi rtf.$$

This simplifies into

$$PD = 4tf.$$

For the resistance to rupture along a longitudinal seam it can be proved mathematically that the tendency to rupture in any plane will be the sum of the components of the normal pressure at every point which are perpendicular to that plane. Therefore on each inch in length of such longitudinal seam the total pressure is PD. This can also be made clear by the expedient of imagining each semi-cylinder of the boiler to be nearly filled with a solid material like wood, and that the pressure P is introduced into the narrow space left between the two semi-cylinders which are held together by the enveloping ring of boiler-plate. The resistance to separation of these semi-cylinders is the sum of the areas of boiler-plate at the two sides, multiplied by the tensile strength per square inch of that plate. This resistance is denoted by $2tf$ when the ring has a length of one inch. Hence the equilibrium of bursting pressure and resistance along a longitudinal seam is reached when

$$PD = 2tf.$$

It will be noticed that the boiler is twice as strong against blowing out the head or rupturing a ring seam as it is against rupturing along the longitudinal elements of the cylinder. This explains why boilers are double-riveted or are made with special joints for their longitudinal seams.

The above calculation is for solid plate, or for welds which are as strong as the solid plate. Where riveted seams are used an allowance must be made for the reduction of the value for f due to the weakening caused by removing the metal at the rivet-holes, which the rivets do not replace.

Boilers are usually designed with a factor of safety of six in their shells; or in other words, the working pressure is one sixth that at which the shell would be expected to rupture from internal pressure.

Boiler-plate can be bought of all thicknesses, but it is usual when the calculation brings out an inconvenient figure to pass to that practical thickness which is next above. Usual thicknesses of plate are, in fractions of an inch:

$$\tfrac{3}{16},\ \tfrac{1}{4},\ \tfrac{5}{16},\ \tfrac{3}{8},\ \tfrac{7}{16},\ \tfrac{1}{2},\ \tfrac{9}{16},\ \tfrac{5}{8},\ \tfrac{3}{4},\ \tfrac{7}{8},\ 1,\ 1\tfrac{1}{8},\ 1\tfrac{1}{4}.$$

It is inconvenient to handle, curve, and rivet plate thicker than one and one-half inches. The difficulty of manufacturing thicker plates also stands in the way of their use. A less thickness can be made to serve by using a smaller diameter.

208. Curving of Plates for Shells.—The plate is received flat from the manufacturer, and must be bent into the cylindrical shape. This is done by rolling it cold between three driven rolls, so arranged that as the plate is moved and driven by two of them it shall be continuously pressed by the third and caused thereby to receive a continuous curvature. Such rolls are called bending-rolls, and may be arranged with their three parallel axes horizontal or vertical. The horizontal arrangement is much preferred in America by reason of its convenience (Fig. 318). The three rolls may be arranged relatively to each other in two ways. Two of the rolls may be fixed in position, both driven by power and with their axes in a horizontal plane; the third will lie above the space

between the other two, or with its axis in the plane of the common tangent to the other two. This third roll will be the bending-roll, will have its axis adjustable, and will not be driven. Its position further from the lower rolls or nearer to them will determine the radius of the curvature of the plate (Fig. 319). The rolled and curved plate will gradually enclose the upper roll, so that if the bent edges are to come together the bearing or housing of this upper roll must be removable at one end to allow the completed cylinder to be removed endwise (Fig. 318). This arrangement of rolls does not cause the plate to be curved all the way to the edges, which are parallel to the axis of the rolls, since a distance equal to the radius of the roll or more cannot receive the curving action of the upper roll with large diameters of cylinder (Fig. 319). A modification is to arrange the two driven rolls over each other, and to make the third approach the opening between them at an angle from below (Fig. 320). This arrangement brings the curving effect close to the edges, and has the plate positively driven against the bending-roll by the nip of the two rolls which are driven. The only difficulty arises from a change of lengths of the contact surface as the cylindrical shape is developed. The two driven rolls would develop equal lengths as they revolve without slipping upon the shorter inner surface and longer outer surface of the curved plate. If this were not overcome, the driven rolls would exert a calendering action on a plate of sensible thickness and undo the curving effect of the third roll. The difficulty is met by driving one of the two rolls from the other by a differential or "box" gear, by which the motion reaches the second roll from the first through a couple of pairs of bevel-wheels. The axes of one pair are independent of the fixed frame, so that if one roll has farther to move than the other the difference in path is able to be compensated by a motion of this movable axis which allows the gears to roll through a space while still transmitting the full driving effort necessary.

The rolling process is effected by rolling the plate back and forth through the rolls with continuous adjustment of the

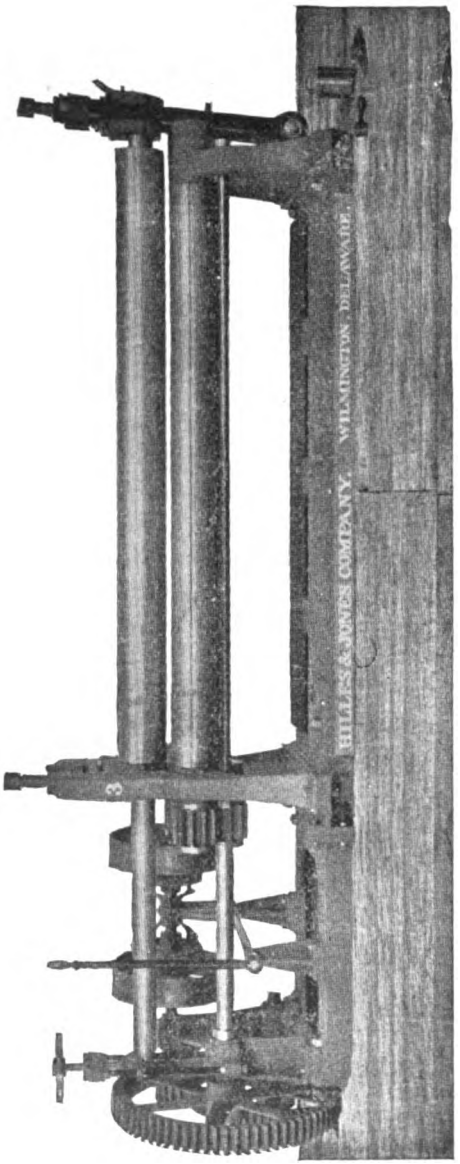

FIG. 318.

third or bending roll until the gauged diameter of the cylinder or segment of cylinder is reached. The rolls have to be

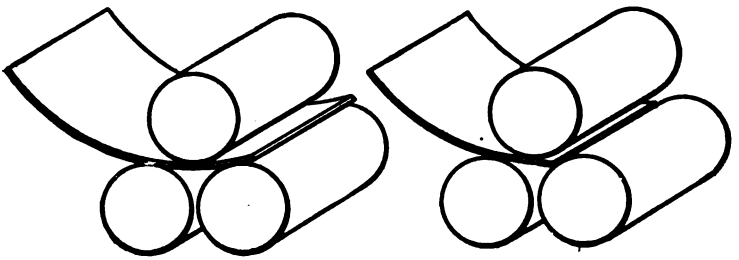

FIG. 319.

of diameter sufficient to withstand the tendency to flex, and of length sufficient to handle the longest or widest plate used. The rolls limit also the thickness of plate convenient for shells. Their convenient diameter imposes a lower limit for

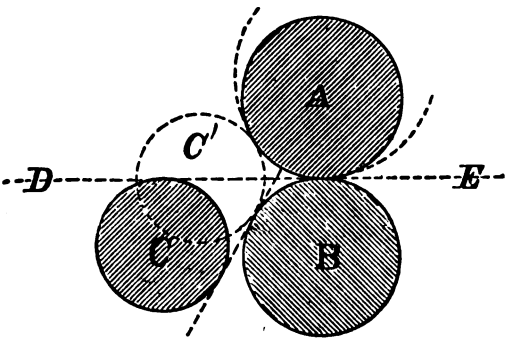

FIG. 320.

the diameter of flues to be made by their use. Their length imposes a limit upon the length of boiler-shell to be made in one piece, or in two pieces if the joint is to be longitudinal.

209. Arrangement of Rings of Plate in Shells.—It is desired to have as few joints in the shell as possible, and yet the boiler must have a practical length. The least number of joints is reached in the arrangement shown for a shell boiler in Fig. 321, where the shell part is one long plate jointed lengthwise. The size of such boiler is limited by the

attainable size of single sheet both as to length and diameter, so that it is much more usual to arrange the length of the plate circumferentially, and to get the necessary length by

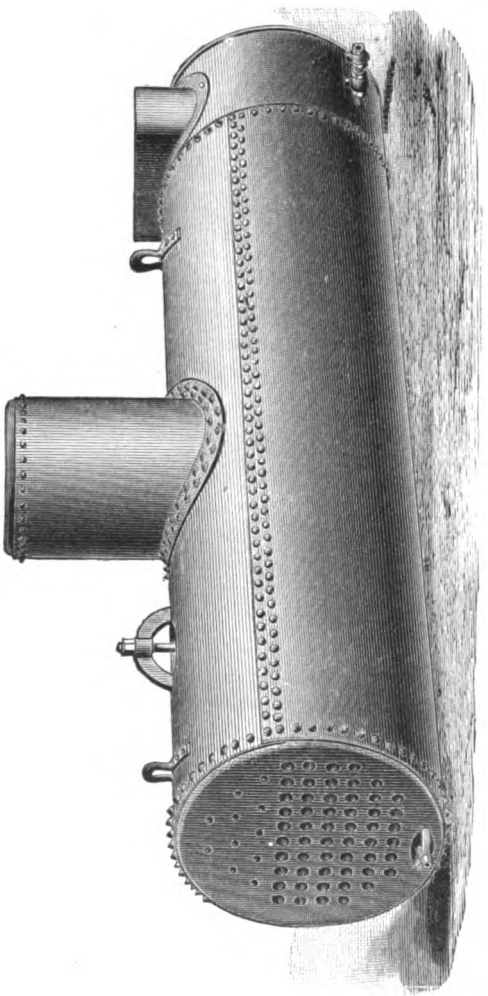

FIG. 321.

jointing such rings or zones by one, two, or more ring seams. In very large diameters, such as are usual in marine boilers, the rings themselves will each be made up of two or more

segments, jointed by longitudinal joints. In the ordinary shell of stationary practice the ring or zone is in one piece joined at the edges, and the usual diameter of such shells is fixed by the length of plate usually to be had. If there are three such rings or belts as in the usual iron boiler and in many steel boilers, these rings may be jointed to each other at the roundabout or ring seams in one of three ways. The three rings may be true cylinders, each a little smaller than the preceding, so that they fit inside successively like the joints of a telescope, and the larger laps over the smaller one; or one ring may be smaller than the other two (usually the middle one smaller than the two end ones), so that it will fit inside of both and form a lap (Fig. 431). The third plan is to taper each ring slightly, so that it will fit outside at one end over the end of the next ring. This end has the same diameter as the small end of that same ring, so that the two ends of the boiler are of the same diameter. The taper of the rings is laid out so that currents of hot gases or flames shall not impinge against the ends of such lapping ring-joints, but shall flow over the ridge which the lap makes.

210. **Heads of Boiler-shells. Flanging.**—The head of the boiler-shell is that flat or arched surface which closes the two ends of the cylinder. It has to be jointed to the cylindrical portion. American practice is to have the cylinder fit over the outside of the head, and to bend up the edges of the head all around to form a surface parallel to the cylindrical shell by which the joint can be made. This bending up of the edges of a flat disk to form a projecting ring or flange is called "flanging." It may be done by hand or by machine. By hand the edge is heated locally, a sector at a time, and the hot metal is bent over the edge of a properly moulded anvil or former by means of heavy wooden beetles or mauls in the hands of skilled strikers or smiths. Wooden heads do not draw down the metal in bending as metal sledges would, and the blow is delivered over more surface. The objections to hand-forming are the cost of labor, the impossibility of uniform heating all round the edge, and the inaccuracy of the

final cylinder. Steel heads, forge-heated and hand-flanged, must be annealed after forming, since steel is specially sensitive to inequalities of heating, and the finished head unannealed is all distorted and unequally strained from this action. Hand-flanging must be so done that the steel never cools under treatment to its critical temperature, which is found at about a blue heat. It is brittle and liable to crack under the blows of even the wooden mauls.

Machine-flanging is much to be preferred where practicable. It is usually a process of hydraulic forging with proper dies. When done at one process two cast-iron formers are used, one male and one female. The disk is heated uniformly all over, and when at proper temperature is laid upon the top of the hollow female die. The male die descends concentric with the other by hydraulic pressure, and forces the plate to bend up uniformly all around and take the shape of the standard male former. The head is thus shaped at one heat to the required shape and diameter and without distorting strains. In other forms of flanging-press (Fig. 322) the

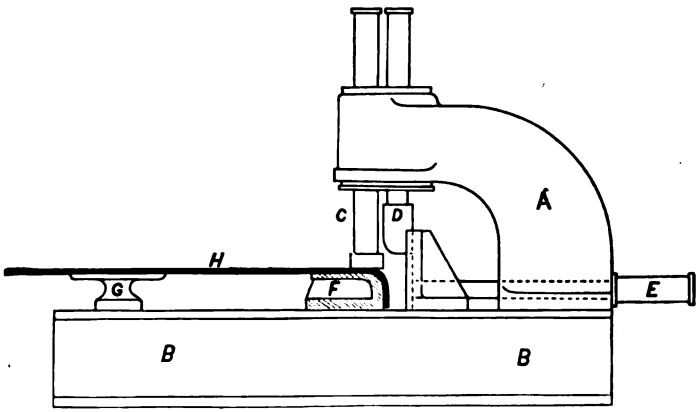

FIG. 322.

plate is held at a proper temperature between the faces of a hydraulic vise, while pressure comes radially upon the edge of the disk from hydraulic cylinders which carry shaping-

heads and bend down the edge gradually until the disk fits the former which is the face of the hydraulic vise.

Earlier European boilers will show the head jointed to the shell by a ring of angle-iron section, or by a ring of plate forged into that shape. The use of more ductile and superior metal for heads has made flanging more usual.

The flange is usually placed inside the boiler. This keeps it protected from the rapid oxidation or burning to which projecting flanges would be exposed if hot gases or flame impinged on them and they were only cooled by conduction from the water at some inches' distance.

Flanging stretches the metal right at the bend, but compresses the metal beyond the bend which forms the flanged surface. The sharper the angle of the bend, the more severe these concentrated strains. Hence to bend flanges with a radius not less than four inches has been specified, to diminish this source of trouble. Flanging is also necessary in jointing rectangular fire-boxes and for the attachment of large flues to boiler-heads.

211. Joints in Boiler-shells. Welding.—The rings which form the cylindrical shell of the boiler are curved from flat plates, and must be jointed at the edges and at their ends. The requisites of such a joint are: (1) strength to resist the strain from internal pressure; (2) tightness against leakage of water or steam, with a construction which shall not be too costly; (3) ability to withstand heat; (4) ability to undergo changes of shape from expansions and ntractions without injury to the metal.

The two edges of the plate which are to be joined are arranged so as to lap over each other to be secured together, and this attaching can be done by welding or by some form of the rivet-joint. Bolting with a thread and nut will not meet the second requirement of tightness against leakage unless the joint-surfaces are planed and finished and the bolt-holes reamed and the bolts turned. This is prohibitory from its cost; and even if this were not a barrier, the friction of the nut so reduces the clamping-power of the screw-bolt that it

would make a much weaker joint than is secured by the other plans.

WELDING of boiler-plate to make the joint with itself or other parts of the shell offers many advantages. The welding property of wrought iron and ductile steel enables them to unite at clean surfaces when pressed together with sufficient force in a state of sufficient plasticity from heat. The presence of oxide of iron or dirt or cinder between the contact-surfaces will prevent a satisfactory weld, or if there is no adequate pressure to unite the surfaces together. When welding is satisfactory it may be expected to be as strong as the rest of the metal—which has, in the case of wrought iron, been fabricated into plate by availing of the welding property through the entire course of manufacture.

Welding of plate is done by lapping the two edges over for two or three inches, heating the lap to a welding heat on both sides by a flame or jet of gas free from sulphur or other oxidizing tendencies, and then bringing the lapped surfaces together either by the force of percussive hammer or sledge blows or by steady pressure of cams or roller-presses. Some fluxing material like borax which will make a fluid glass with oxide of iron may be used as a protection for the contact-surfaces, so as to prevent oxidation from exposure to air, with the expectation that it will be expelled from the joint by the welding pressure, and carry with it everything which would interfere with good welding.

Welding of boiler-joints offers these advantages:

(1) It makes the joint as strong as the rest of the plate, or nearly so.

(2) The plate is no thicker at the joints than elsewhere. This avoidance of a lap keeps the tensile strain from internal pressure always in the axis of the plate and without a tendency to flex at the lap or joint (par. 216).

(3) Double or extra thickness is avoided at laps or joints. The plate gets unnecessarily hot at multiple thicknesses, and oxidation is more rapid there.

(4) No rivets are required, which makes the boiler lighter and less liable to leak.

(5) A good welded seam is water-tight and requires no calking.

The objections to the welded seam in boilers are:

(1) It cannot be inspected for its satisfactory quality unless it is so bad as to allow water to leak through it under pressure. But it may be water-tight and yet be far from having full strength. While a test by hammer-taps to observe the resonance of the metal at the joint will reveal much to the practised ear, it lacks the convincing force of an inspection of each single rivet in a riveted seam.

(2) Welded joints in large shells can only be gotten from a few firms with facilities and experience for such work. This has some effect upon the cost of such joints. But when a satisfactory welded seam can be obtained it makes an ideal joint.

In cylinders with closed ends the last seam must be riveted even if the others are welded. The exception is where the head is flanged outward, or is convex inward so as to bring the closing joint outside the shell (par. 210).

212. Riveted Joints for Boiler-shells.—When two plates are to be joined by rivets, they are lapped over each other, and through a hole which matches in the two plates a rivet is introduced red or white hot. This rivet has a head formed at one end in its manufacture, but the shank is straight. When in place through the holes, pressure is brought upon both ends of the rivet, whereby the projecting shank is upset and forced back upon itself, thereby enlarging its diameter in the hole until it fills it completely, and when the metal can no longer be displaced laterally in the holes, the metal of the rivet still projecting beyond the plate, spreads sidewise over and beyond the hole and forms the second head of the rivet. The rivet when completed has two heads connected by the shank which is still red hot when the head is finished, and which in its contraction on cooling draws the two plates together with a force measured by the modulus of elasticity of the rivet-

metal and by the cross-section of the shank. It is a force much in excess of that which any bolt and nut can exert.

The riveted joint meets the requirements of a boiler-joint in that it is—

(1) Strong.
(2) Water-tight.
(3) Cheap.

The difficulties which it introduces are:

(1) The hole for the rivet cuts out just so much metal from the solid plate, and therefore the joint is not as strong as the plate where there are no holes.

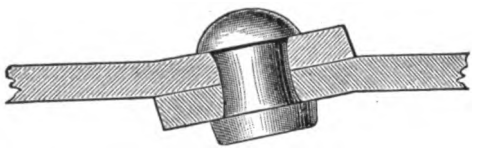

FIG. 323.

2) In simple lap-joints the strain on either side of the joint is not resisted in the axis of the plate on the other. High pressure tends to flex the lap-joint till the two plates come into line (Fig. 323), and this flexure causes the deterioration called "grooving" (par. 340).

(3) The boiler-shell is thicker at joints than elsewhere.

There are certain further disadvantages attending a badly made rivet-joint which will be noted hereafter. The design of special riveted joints is to diminish these difficulties.

213. Construction of a Riveted Joint. Punching and Drilling.—The holes in the plate to receive the rivets may be made by punching, by drilling, or by punching out a small hole and enlarging it by reaming. Formerly, and with iron plate, punching was universal. More recently, and with steel, the latter methods are used.

The punching of the hole is done in a punching-press (Fig. 324) in which a hard and tough steel cylinder comes down upon the plate supported upon an abutment or female die having a hole in it slightly larger than the punch (Fig. 325). The punch shears its way through the supported plate

and extrudes a blank of the punched plate cut by its stroke. While at first the punch cuts the plate, after a fraction of an inch of penetration it tears its way through the rest of the thickness without true shearing action; and in a plate of

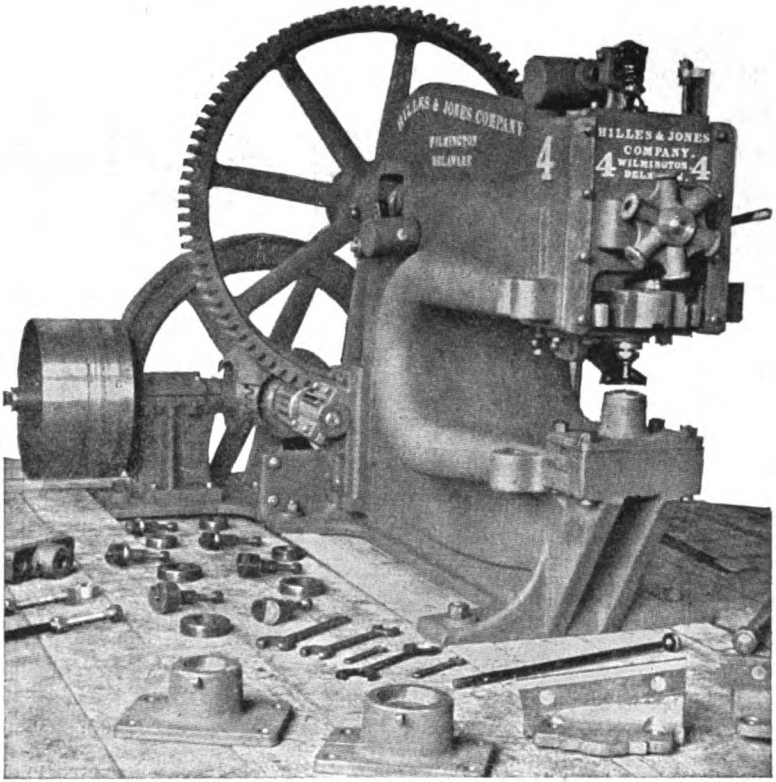

FIG. 324.

laminated structure such as wrought iron has, it is largely the reaction of the abutment or die which limits the lateral spread of the tearing effect. The extruded blank is conical, since the die is larger than the punch in order to free the latter and pass the blank.* The punching-presses may be crank-presses as shown, or the punch may be driven by hydraulic

* Usually larger by $\frac{1}{10}$ the diameter of the punch.

pressure. Flanged plates are usually punched in horizontal punching-presses. A spiral shape has been given to the impact-face of the punch so as to make the cut a gradual and progressive one around the circumference of the hole, and to help secure a true shearing action (Fig. 326).

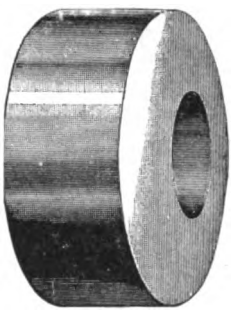

FIG. 325.

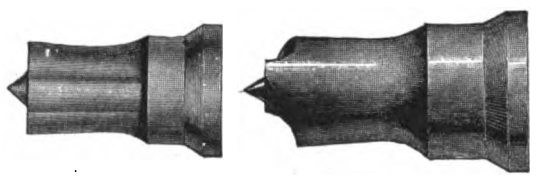

FIG. 326.

Drilling of plate is done by the ordinary machine-shop drill of two cutting planes meeting at an edge. Twist-drills are most convenient, although the flat drill is still to be met. The drill will be run by the ordinary drill-press.

The gang-punch or multiple punch has a number of punches mounted in a fixed relation in a holder, so that one stroke of the holder punches two, three, or more holes at once and at a standard distance apart.

Gang or multiple drills have a number of revolving spindles driven from a common source, each carrying its own drill and drilling a number of holes at once and at a fixed distance apart. These gang-drills usually drill alternate holes in a seam to permit a convenient distance between the spindles.

214. Punching and Drilling Compared.—The objections to punching the holes for the rivets are:

(1) The injury to the plate. This has already been referred to for a laminated material like wrought iron (par. 213), but in steel the effect is different. The effect of the impact-pressure of the punch is to produce an effect upon the metal around the hole similar to that of hardening by heating and rapid cooling. The metal has its modulus of elasticity

raised, so that it stretches less before breaking or cracking, which is the same as becoming brittle and liable to fail in service under strain suddenly applied. Experiments would appear to show that the carbon of the steel enters into combination wth the iron under the shock, and, to restore the metal to the normal ductility after punching, the plate must be annealed. Otherwise the deteriorated metal must be removed by the reaming or enlarging of the hole until good metal is reached at a distance from the punched place beyond the effect of the blow of the punch.

(2) The spacing of the holes is likely to be inaccurate in punching with a single punch, and when punched independently the holes in the plates which lap will not match, or will be "half-blind" (Fig. 327). This difficulty arises when massive plates are presented by hand to the punch and the work is done too rapidly. The holes are laid out or are marked on the plate, and the punch mechanism thrown into gear when the mark is under the axis of the punch. Even when the punch has a "tit" (Fig. 325) to serve to guide it to the axis of the hole it may seem to take too long to adjust the plate, and the stroke may be made before the setting was perfect. Gang-punches avoid this trouble so far as each set is concerned, but best results are had from the use of feeding-tables on which the plate rests, and which are fed forward by racks or similar feed-devices, so that the plate moves each time through the same fixed distance, thus securing uniform spacing of the holes upon a line. Errors may creep in even here from a divergence laterally of the lines of holes which are accurately spaced lengthwise in two plates. Inaccurate spacing which causes the holes to come half-blind to each other must be corrected either by reaming out the holes till they do match, or by stretching them by the drift-pin to be referred to hereafter (par. 219). If they do not match at all, the two holes are blind.

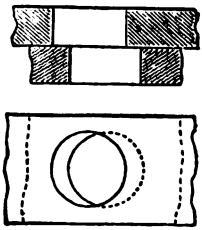

FIG. 327.

The objections to drilling the holes are:

(1) With the single drill the process is slow. It takes from five to seven times as long to drill as to punch, or five or seven holes can be punched while one is being drilled.

(2) This makes drilling costly unless gang methods are used.

(3) The point of a drill is not a point, but an edge where two cutting planes meet. Hence the drill in starting has a tendency to work sidewise away from the true axis of its hole and follow one or the other of the corners of the edge-plane. If this tendency is disregarded, the holes do not come true except by accident. If time is taken to keep the drill starting true, the work is slow.

(4) A drilled hole in thin plate usually has a burr or projecting ridge raised around the edge of the bottom of the hole, where the feeding pressure on the spindle and drill forces the latter through the thin film of metal which remains in the hole after the point of the drill has come through, and cutting and resistance is at the edges only. This burr would prevent the joint of plates being water-tight unless it was carefully removed by filing.

(5) The drilled hole is cylindrical; the punched hole is conical. It is an advantage to have the hole conical if the two small bases of the cones can come together (as at *B* in Fig. 331). The sloping sides give greater holding power to the head, and give a form of rivet better calculatd to prevent the head from snapping off in service.

The points in favor of punching are its rapidity and cheapness. The points in favor of drilling are its harmlessness to the plate and the probable greater accuracy as to the matching of the holes.

The plan of punching small and enlarging to size by reaming out the holes offers the advantage of rapidity and cheapness, and leaves no deteriorated metal. One-tenth of an inch of metal cut away from the edge of the hole will remove the hardened material, and such reaming is much more rapid than drilling out the solid metal. The reamer may be taper-

ing if conical holes are preferred. A great deal of work is done by this method, as combining the commercial advantages of one and the advantages as to quality offered by the other.

Drilling, however, must be exacted for thick plates and large holes, and is best at all times. In the very highest standard of practice it is further exacted that the holes shall be drilled after the plates have been curved and assembled, so that the holes shall be drilled truly radial in both plates and with the sheets in place. This prevents troublesome burring, and prevents mismatching of holes. Special machines have been erected for this grade of work.

215. Hand- and Machine-riveting.—The pressure necessary to upset the shank of the rivet into the rivet-hole so as to fill it and to form the second head can be exerted either by hand-hammers in the hands of skilled riveters; or a die or swage may be put over the end of the shank and struck by heavy sledges so as to upset the shank and develop the form of the die on the projecting end; or the pressure can be brought upon the rivet by a machine called a riveter or riveting-machine.

In hand-riveting, the rivet is pushed up from within wherever possible, and when in place a massive swage is held up against the inner head of the rivet by a helper with all the force possible, by leverage, while rapid blows are delivered upon the end of the hot shank by the riveters without. Hand-riveting is necessary for the closing seam of a shell in order that resistance to the heading of the rivets may be offered from within, and by the riveters' helper with his swage. The design of the shell must be such as to allow the "holder-up" of the swage to get out of the boiler when the seam is completed. But machine-riveting gives so much better results in filling the holes by upsetting, and in forcing the plates to contact before the heat comes to press upon them and draw them together, that machine-riveting is used wherever practicable. Swage-riveting with sledges is better than light hammer-work with long or thick rivets, but is also less effective than the work of good machines. The compression of the machines

gives an added resistance to the joint by the frictional resistance which the pressure opposes to a sliding of the two plates upon each other. This resistance adds to the shearing resistance of the rivets by preventing the shearing edges of the plate from commencing on the rivet until the friction is overcome.

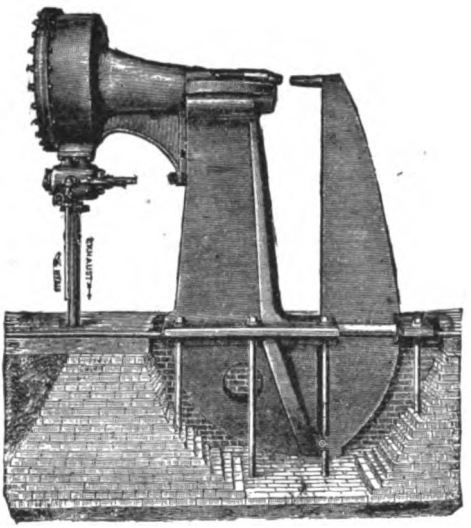

FIG. 329.

The usual types of riveting-machine are three: steam or air riveters, hydraulic riveters, and lever machines. In all types there will be a movable head actuated by power to compress, upset, and head the rivet against a fixed abutment or "stake" which replaces the upheld "swage" in the hand of the helper in hand-riveting. This stake requires to be a stiff and powerful organ of the riveting-machine; and since the longer its length the more metal must be in it for strength and stiffness, it will be apparent that the stake limits either the diameter of flue which must pass over it, or the length of zone to the end of which the stake will reach; or it may limit both. The stake is fitted at its upper end with a die which fits the manufactured head of the rivet (or else will reshape it), and the rivet is pushed through the hole from the stake side. The

movable head is then allowed to exert its force endwise upon the rivet, upsets and heads it, and is then retracted.

The steam-riveter shown in Fig. 329 has a piston of large area, which receives a relatively light pressure of steam or air upon each square inch of area, so that the necessary aggregate force is secured. The exhaust-steam after the working stroke comes round also to the front side, and is exhausted first from the working side so as to leave a pressure

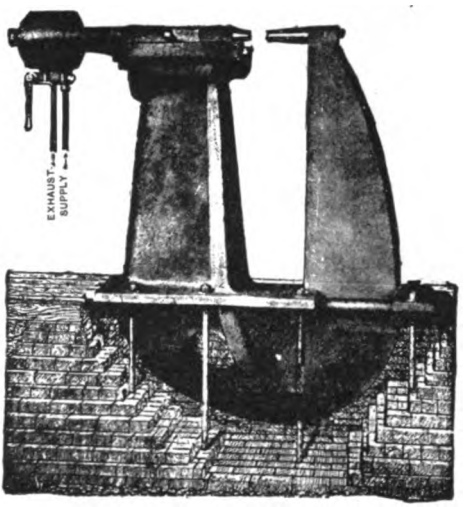

FIG. 330.

to retract the piston before the exhaust occurs from the front side. The hydraulic riveter uses a plunger of small area, exposed to a water-pressure of considerable amount, perhaps 250 to 350 pounds or more per square inch, so that a much less area under greater pressure does the same work as the large area under less pressure (Fig. 330). The lever or press riveters have an elbow-joint linkage which hangs flexed when the movable head is at rest, but can be straightened out by means of a cam or a third link, and in its straightening it compresses the rivet in its place against the stake with the great force of the elbow-joint combination. Some portable riveters are constructed on this principle with a fluid acting

upon a piston to cause the elbow-joint links to straighten. Such are much used in bridge-shops and for girders.

The hydraulic riveters are the most compact, but the high pressures used in them give trouble at the packings. They move more slowly than the steam-riveters in coming against the rivet end, and their effect is more that of pressure and less that of a blow. This latter is hard to prevent with an expanding fluid like steam, over which the valve exerts no control after it has been passed. Either of the fluid machines has the advantage over the lever machine that the pressure can be gradually increased to its maximum as the rivet yields and cools, and furthermore the pressure can remain upon the rivet an appreciable time. They have the further advantage over the lever type that the stroke or travel of the movable head is not fixed in length, but is fixed only by the refusal of the rivet to yield further to pressure. This is convenient when rivets of different length are in question for differing thicknesses or number of laps of plate. This has been met for the lever riveter by having the abutment-joint of the linkage mounted upon a bearing adjustable by a wedge for different lengths of rivet, or upon a yielding bearing which is held to its seat by springs, or by heavy hydraulic pressure maintained by an accumulator. If the resistance offered by the stake to an upset of the rivet was too great as the linkage came straight, the back end of the linkage yielded and prevented such excess. It did not serve, however, if the rivet were shorter than the normal. Then the lever riveter does not get its full pressure upon the metal, while the hydraulic and steam riveters are not subject to this difficulty, but follow the rivet to refusal.

The very intensity of the pressure in upsetting rivets by machine has sometimes caused the metal of the rivet to squeeze sidewise into the joint between the plates, wedging them apart and leaving a thin film between them. This is fatal to tightness of the seam. It is best to have a double ram construction, whereby an outer annular ram forces the two plates together as by a vise-pressure before the inner or

heading ram proper comes forward against the rivet. This closes the joint tight before the rivet begins to press upon it, and gives much the stronger and tighter joint of those made by machine. The use of such a riveting-machine is specified by some designers.

The riveting-machines require adequate overhead hoisting appliances so that massive rings and shells can be rapidly and easily handled, and the joints and rivets presented truly in line and normal to the motion of the heading die. This justifies a travelling crane in a busy shop.

216. Design of a Riveted Joint. Strength.—The distance from centre to centre measured along the line of the seam is called the *pitch* of the rivets. The pitch should be so chosen, when strength of the joint is the only consideration, that the shearing resistance of the metal in the rivets should be equal to the tensile resistance of that part of the plate which remains after the holes have been made through which the rivets pass. If the pitch-length be taken as the unit length, it is obvious that the length of plate to be considered as resisting strain is the pitch less the diameter of the rivet chosen. The plate grows stronger as it becomes thicker, but the rivet does not, because its shearing area is determined by its area of cross-section alone.

But a rational treatment of an ordinary boiler-seam for equal strength of rivet and plate is not profitable, because the primary requisite of tightness for the seam brings the rivets nearer together, or diminishes the pitch as compared with that required for strength only. Hence practice has fixed the usual proportions of rivet in relation to thickness of plate, and has fixed the corresponding pitch. (See Notes.)

The machine-riveted seam can have a longer pitch than a hand-riveted one. The row of holes is usually distant from the edge of the plate a distance equal to one and one-half the diameter of the holes, so as to leave plenty of sound metal outside of the holes for both strength and stiffness and to be water-tight. It is obvious that if two rows of rivets are used, one behind the other, and with holes in line, a less

diameter of rivet may be used on each line with increased shearing resistance as compared with a single row, and yet the solid metal of the plate between holes can be increased with the same pitch. The whole intent of special designs of riveted joint is to bring the plate strength between holes up to the point at which the joint shall be as strong as the solid plate against tearing, while the rivets shall have metal enough to prevent shearing.

217. Rivets and their Arrangement.—Fig. 331 shows the conventional types of rivet in section. *A* has the conical

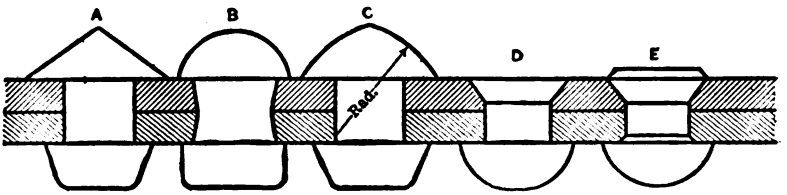

FIG. 331.

head made by hand, the bottom showing the usual pan-tail which the rivet has as manufactured. *B* is the cup or button head resulting from the use of a swage. *C* or *A* will represent forms given by the dies of riveting-machines. *D* is the countersunk head usual in shipwork or where a smooth skin surface is to be sought.

Rivets of iron boilers should be of iron, and for steel boilers they should be of a mild steel able to stand the proper forge-tests. Their tensile strength is usually taken the same as the shearing strength (or $\frac{9}{10}$ of it), and may be put at 55,000 pounds to the square inch for steel. The forge-tests are:

(1) Bend double close when hot.

(2) Bend to a U over a bar of its own diameter cold, and show no cracking in either case.

(3) The head should hammer hot to form a disk $2\frac{1}{2}$ times the diameter of the shank.

(4) The shank should hammer cold to a flat $\frac{1}{8}$ of an inch thick, and then withstand punching with a solid punch, making a hole of the size of the original shank; both of these without cracking or splaying at the edges.

For wrought-iron rivets the tensile strength may be called 50,000 pounds per square inch, and the shearing strength 40,000 pounds; the metal should withstand the same forge-tests.

The arrangement of the rivets in a boiler-joint will be

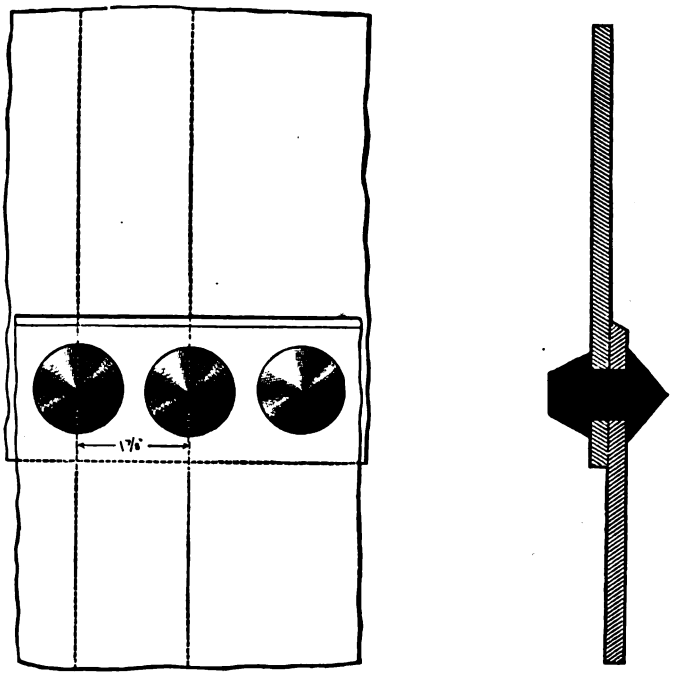

FIG. 332.

either ordinary or special. The ordinary riveted joints are four:

(1) Single-riveted lap.
(2) Double-riveted lap.
(3) Butt-joint with single cover.
(4) Butt-joint with double cover.

Figs. 332 to 338 illustrate these types. The lap-joint, single- or double-riveted (Figs. 332 and 333), is very general because cheaper. Ring seams will be single- and longitudinal seams double-riveted (see par. 207). Double-riveted joints

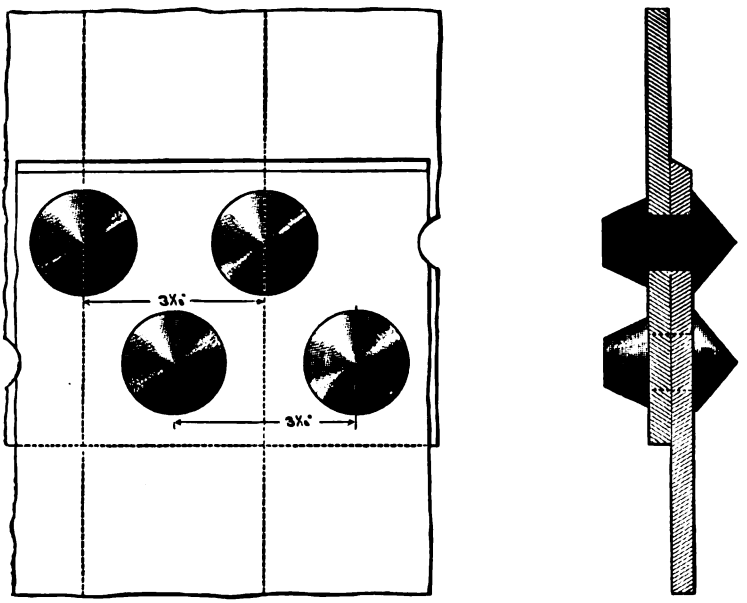

FIG. 333.

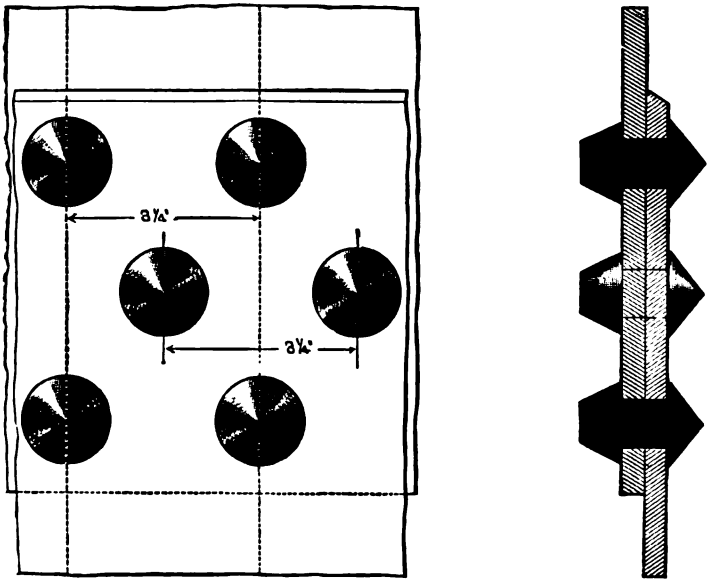

FIG. 334.

may be either chain or stagger as respects the arrangement of the rivets. In chain-riveting the rivets are behind each other in the two rows. The objection to the lap-joint is the tendency to flex the plates at the passage from two thick-

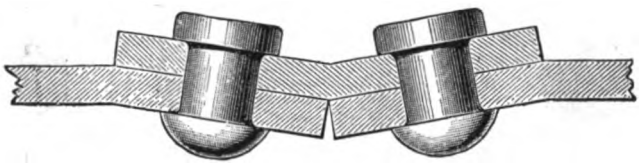

FIG. 336.

nesses to one when the pull on each plate seeks to oppose itself to that exerted in the line of the other (Fig. 323). The treble-riveted joint (Fig. 334) gives a longer lap and more plate area and more rivet-shearing area, as well as a stiffer

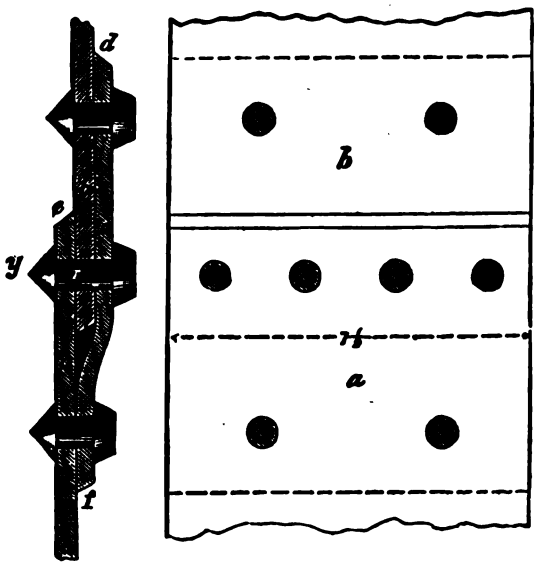

FIG. 337.

joint. The butt-joint with double cover (Fig. 338) doubles the number of rivets required as compared with the same class of lap-joints, but the strain is in line and without tendency to

flex the plates, and the rivets are in double shear. It is not so with the butt and single cover (Fig. 336). The double-cover butt is liable to have the outer cover overheated when

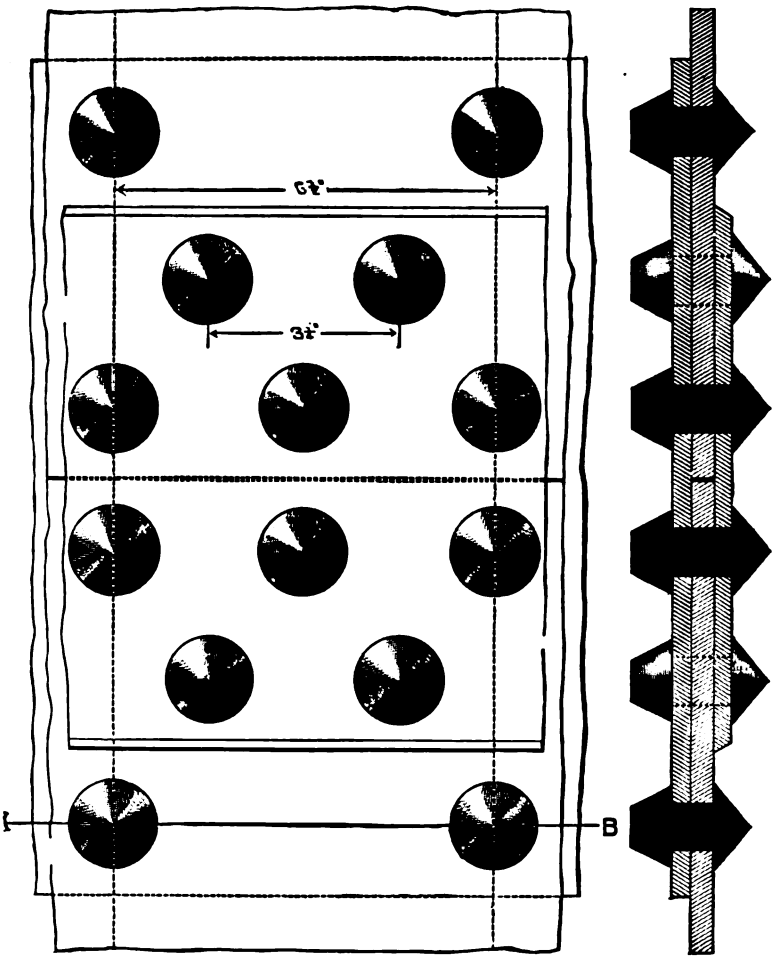

FIG. 338.

exposed to fire. The special joints are departures from the four conventional types, seeking to secure the features of the double butt with less expense. Figs. 337, 338, and 339 will

serve as types of such joints. The strength of single lap-joints being from 55 to 60 per cent of the original plate, and of double-riveted laps 70 per cent, such special double butt-

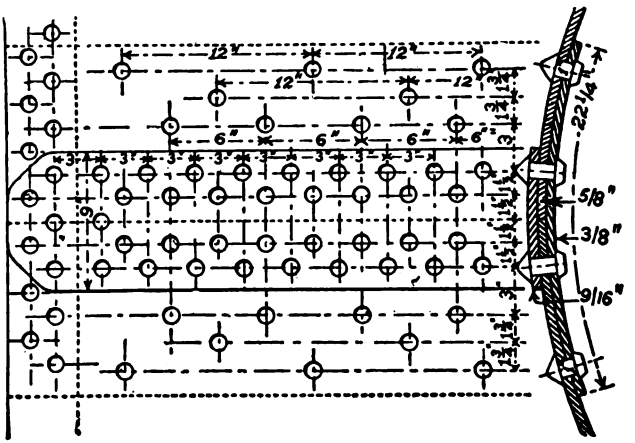
12"
12"
12"
12"
12"
6"
6"
6"
6"
3"
3"
3

the seam usually makes the failure occur in the plate (Fig. 340). The danger from (*c*) occurs when hard steel rivets are used in soft iron plate; (*e*) may happen when the line of rivet-holes is too near the edge of the plate and the rivets are hard and dense. It is the least usual. The failure (*b*) is most common. The line between rivet-holes along the pitch is the shortest line or line of least resistance, and any maltreatment of the plate in making the joint has tended to make it weaker. Such maltreatment may come from punching without reaming or annealing, whereby the steel is more brittle and less tough than it should be (pars. 213 and 214); or if the use of the drift-pin has been permitted, the metal has been initially strained locally thereby beyond its elastic limit.

219. **The Drift-pin** is a tapering pin of hard and tough steel which is used to force and draw into coincidence two holes in a seam which have not come opposite to each other. The taper pin is inserted in the half-blind holes and driven downward, so that it wedges the projecting edges of the holes over and draws the metal around the holes out of shape until the distorted holes agree. This will buckle the metal in front of the hole if the error in alignment is at right angles to the pitch, and cause failure (*c*), as well as strain the metal along the line of the pitch and start the crack which ends in failure (*b*). If the error in alignment is along the line of the pitch, the drift-pin tends to start failure (*d*) and injures the plate between rivets, which renders it liable to failure (*b*) also. The drift-pin is fatal to good metal in steel boilers, and its use should be forbidden by the specifications. If holes must be expected to be inaccurately spaced, the coincidence should be brought about by use of a cutting-reamer, whereby no injury to the material is incurred. Drilling the holes in places makes both drift and reamer unnecessary.

The failure of the joint by gradual action of over-pressure by methods (*c*) and (*e*) is apt to show itself by leakage before it is imminently dangerous. Inspection may also reveal failures (*b*) and (*d*) if they are not the result of some sudden strain. It is an element of safety in the riveted joint that it

should give warning of its probable failure by the leakages which accompany the first stages of such failure. Old seams may fail from corrosion or grooving by other methods than these, determined by the character of the deterioration which has weakened them. But except where the solid plate is weakened by corrosion or grooving, such wear and tear is most apt to hasten a failure at one of the four weak points above discussed.

220. **Stays and Staying.**—It has been seen (par. 202) that the sphere and the cylinder are the only forms which have no tendency to change shape under internal pressure. Or, in other words, that the circular is the limit form towards which all sections tend, and which they will assume if the elasticity of the material will permit such deformation of section to occur without breaking. When it is inconvenient to use cylindrical or spherical elements in the design desired, and particularly where flat surfaces are to be used, the tendency to deform under pressure must be resisted by positive means other than the tensile or transverse strength of the material. Rods, bolts, bars, or braces used to prevent such deformations of flat or arched or non-circular surfaces are called by the general name of "*stays.*"

The simplest case is where two parallel surfaces, flat, or parallel with one concave and the other convex to the pressure and not far apart from each other, are to be tied together to resist the pressure between them which tends to force them apart. This occurs at the sides of the fire-box in locomotive boilers, in some marine and upright boilers, and at the crown-sheets of some designs of locomotive boilers. The most ready solution is to tie the two surfaces together by round bolts or rods whose area of cross-section shall be sufficient to resist the pressure upon the area they support, and for which the distance between centres shall be so small that no deflection or bulging of the plates can occur between them. With thinner plate this centre distance used to be four inches in locomotive practice; recent practice raises this distance to six inches or over. These stay-bolts are either headed over hot on the

outside of the two plates, like an ordinary hand-made rivet, or more usually the holes in the two plates are threaded and the stay-bolt is screwed into both plates, and is slightly upset on the ends when in place, to prevent working out and leaking, and also to reinforce the strength of the threads. Thicker plates give sufficient length of thread for strength. Hollow stay-bolts are also used on the water-legs of locomotive boilers, both because they will manifest the beginnings of failure by leakage of steam through the crack of the initial fracture, and because the air which goes through the hollow keeps them cool and helps supply oxygen for the fire. The simple heading of the stay-bolt like a rivet was troublesome on account of the tendency of the shank to bend, and also because an unequal contraction of the group of stay-bolts made some too tight and others loose. The holes for the screwed stay-bolt are tapped by a long tap so that both plates have their threads parts of the same screw, and the two plates are under equal tension if all bolts are of the same length. This method is most satisfactory if the stay-bolts are short and of equal length. As they heat by contact with the steam or hot water they lengthen and slack their hold, and the longer they are the more they yield. Hence, while this same method can be used to stay the two flat cylindrical heads of a cylindrical shell boiler to each other and prevent their bulging outward, it is usual only for boilers of comparatively short length, such as are used in marine practice, or unless the pressure is to be so high that no other plan seems advisable. Such "through-stays" will be of round rods of sufficient size, threaded at the two ends, which have been upset so that the bottom of the thread on the enlarged ends shall have a diameter equal to that of the body of the rod. The hold of the rod in the plate by its thread is reinforced by a nut on the outside which caps over the end of the rod, and a flexible copper washer between the plate and the nut helps to make the joint water-tight. A jam-nut on the inside with a washer helps to keep all snug, and prevents its working loose by expansion and contraction. Since through stay-rods of this

type cannot usually be put close together, but must be spaced far enough apart to allow a man to pass between them for inspection and for work, their centres will be sixteen inches apart at least; so that they must each withstand the pressure in such case exerted over an area of 256 square inches, and it is

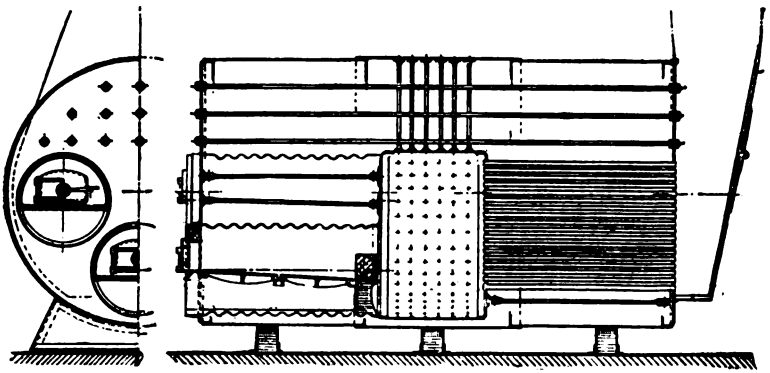

FIG. 341.

usual to stiffen the head by means of angle- or channel-irons or similar structural shapes, whereby the holding power of the stays shall be distributed over the more flexible head. This

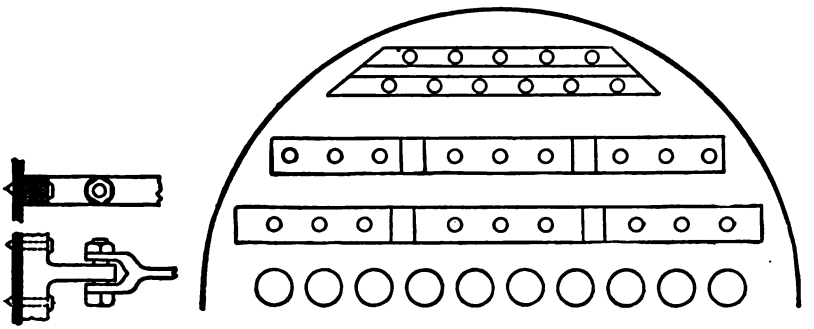

FIG. 342.

can also be done by large washers on the outside of the head. Fig. 341 will show the detail of such through-stays.

To avoid the threaded hole in the heads and the projecting end of the stay, the stay-rod has been fastened to stay-bars on the heads by a pin-joint. Fig. 342 shows a form of

this method where the stay-bars are relatively heavy forgings of two to two and a half inches square, with lugs bump-welded on the inside. The stay-rod ends in a fork which spans the lugs, and a bolt or pin connection ties the bars together upon the two heads. Somewhat lighter than this is the similar arrangement of Figs. 343, 344, and 345, where angle- or tee-

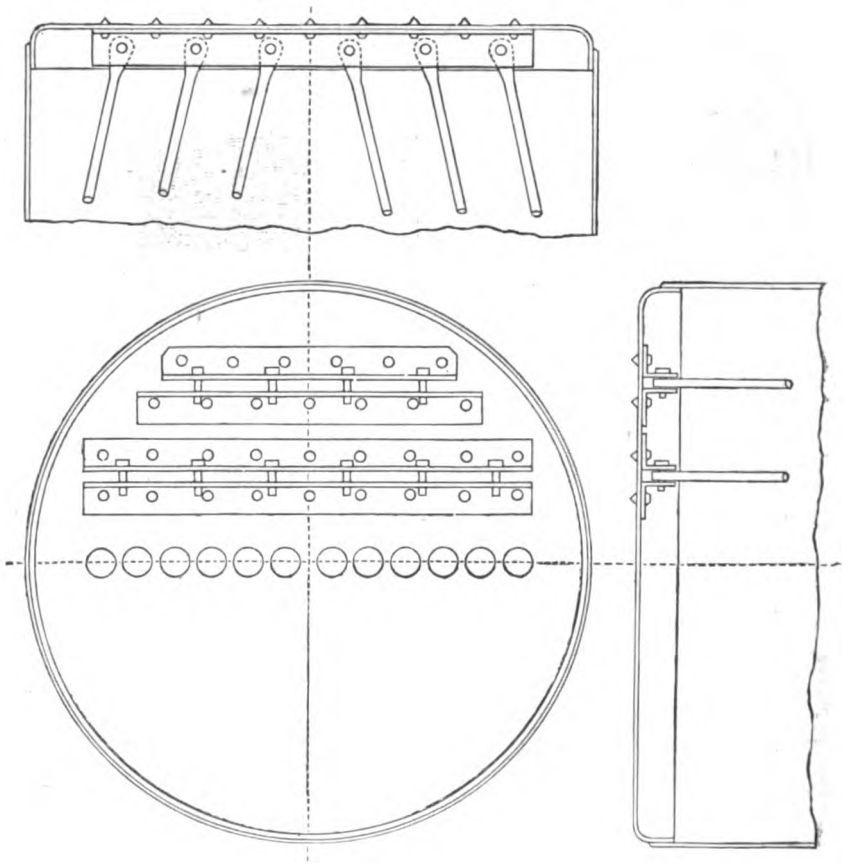

FIG. 343.

irons are riveted to the head, and the stays pinned to them by pins in single or double shear; but in these arrangements the obliquity of the stay-rod indicates a prevalent arrangement for medium pressures. The inner end of the stay-rod in this case

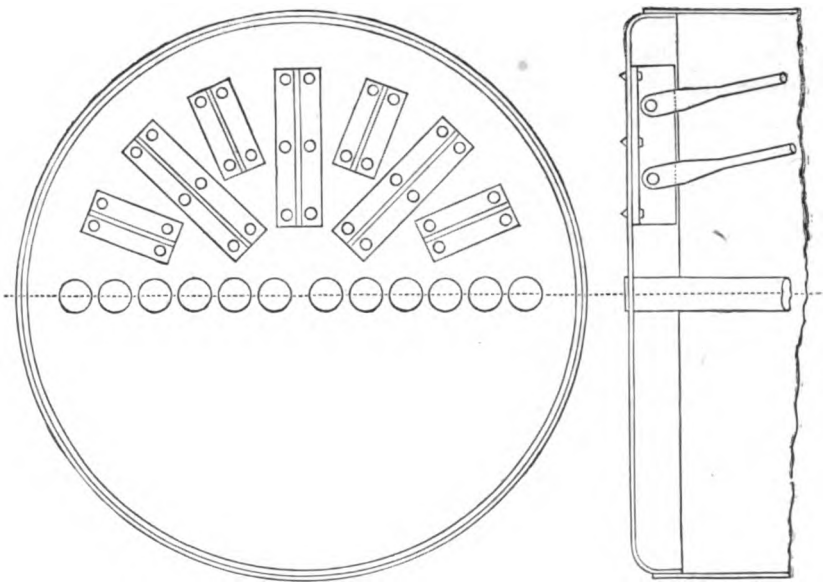

FIG. 344.

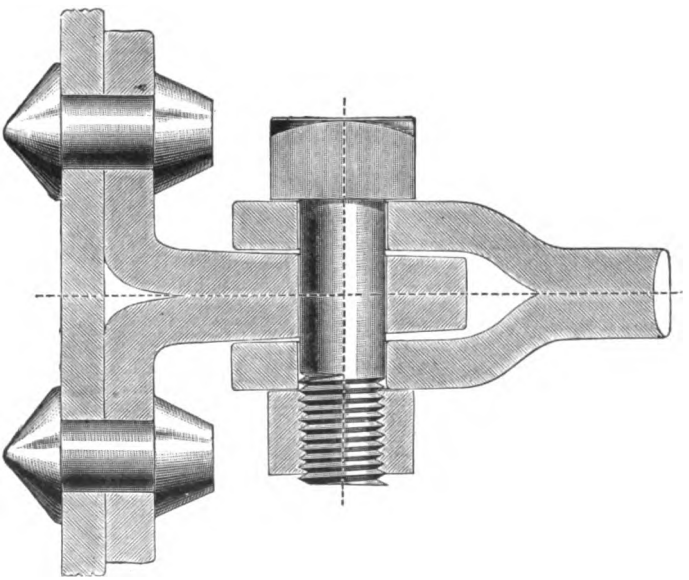

FIG. 345.

is fastened to the cylindrical shell at a convenient distance back from the head by rivets, and thus the bulging tendency is withstood by the tensile strength of the shell lengthwise, in which direction it is abundantly strong. Instead, again, of

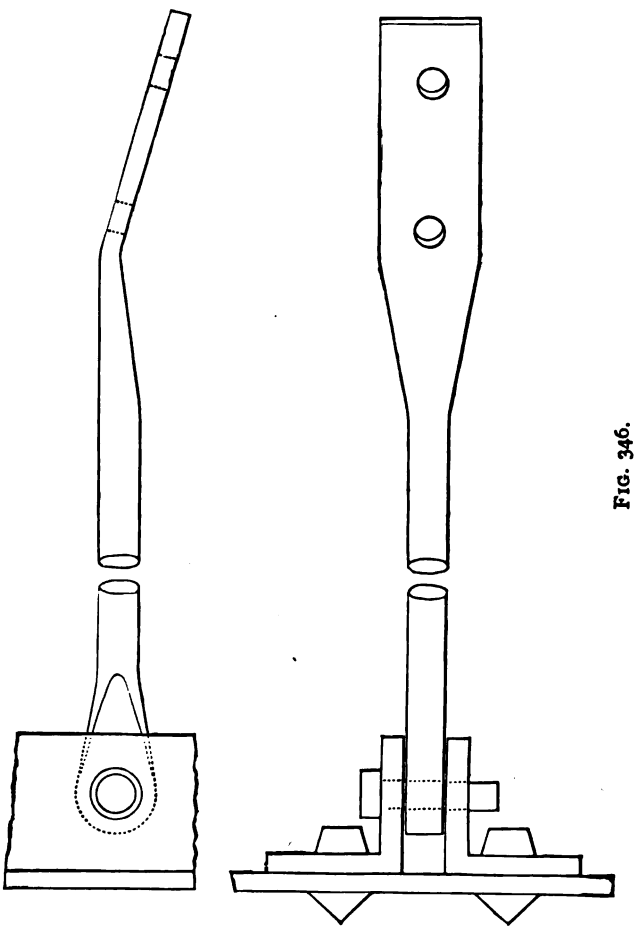

FIG. 346.

structural iron bars, single or independent sockets may be used as in Figs. 346 and 347, whereby the action of the stays is distributed even more generally over the surface to be stayed. Fig. 345 will serve for detail of these also. It is apparent that the diagonal stay must be stronger than the

straight one to withstand the same strain (Fig. 353). The cheapest and most uncertain of the diagonal stays is the plain rod, flattened at both ends as Fig. 346 is at one end, and

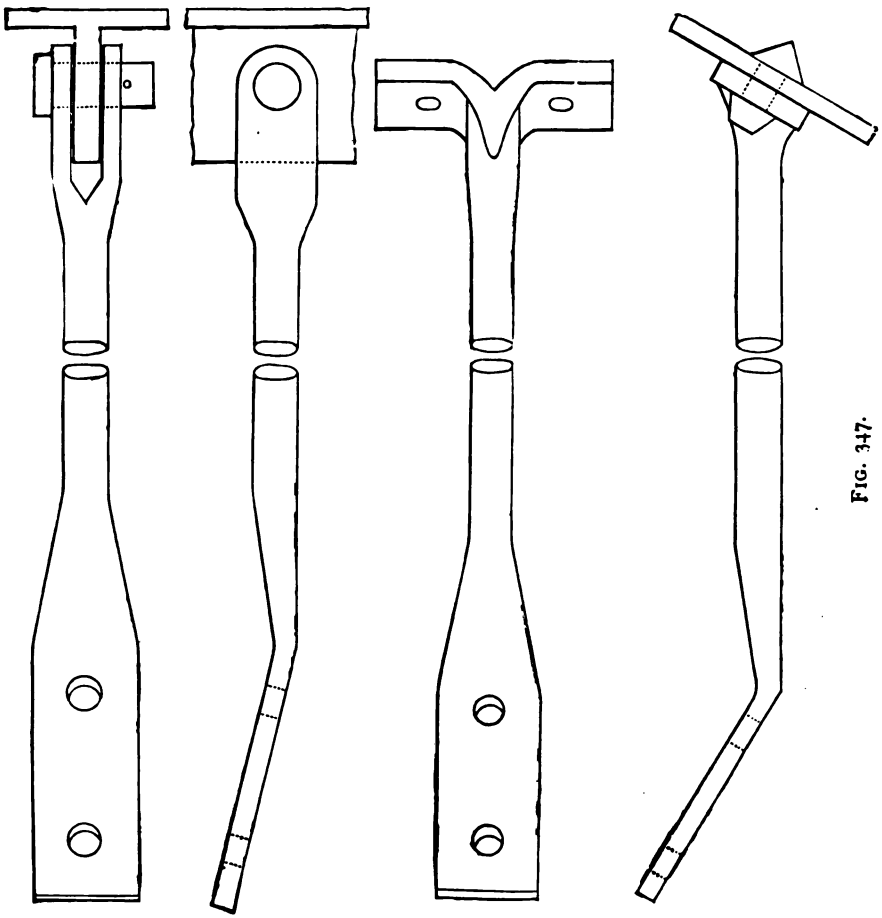

FIG. 347.

riveted by such flattened ends to head and to shell. Modern practice does not favor these by reason of the uncertainty as to their holding capacity, and would limit them to very low pressures or exclude them entirely.

Gusset-stays are a form approved for heavy pressures in British practice. Triangular or trapezoidal pieces of boiler-

plate are riveted to angle-irons on the head and cylindrical shell and bind them into a rigid structure. The stays do not come close to the corner of head and shell, so that in cutting away the heel of the right-angled triangle the fourth side may become parallel to the hypothenuse of the original triangle. The stays are usually placed radially upon the head (See Figs. 402 and 445).

Where a flat surface has no surface parallel to it to which it can be directly stayed, and the length is too short for wise use of diagonal bracing, the surface must be made stiff by

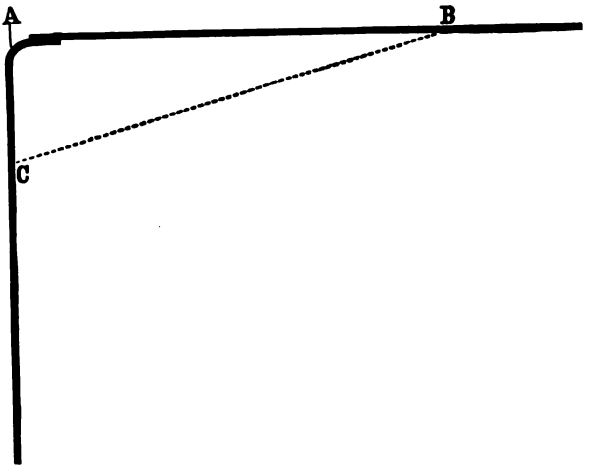

FIG. 353.

bars acting by their stiffness like girders to prevent deformation or collapse. This is met in the flat crown-sheets of locomotives and in combustion-chambers of marine boilers. The problem is complicated by the intense heat upon such surfaces, which precludes the use of solid bars, which would keep water from the metal.

The crown-bar method is shown in Fig. 430, in which the bars appear in pairs, running across the flat sheet from side to side of the furnace. The sheet is stayed to these bars by $\frac{7}{8}$-inch bolts which pass up through the plate and between the two bars of each pair. The joint between head and plate is made by a copper washer, and the washer under the nut

serves to bind the bars together. A taper washer or distance-piece keeps the bars from the plate, so as to cause water to touch as much plate as possible, and keep the plate flat when the bolts are tightened. The deflection of these bars is prevented by sling-stays when they are long, or their own resist-

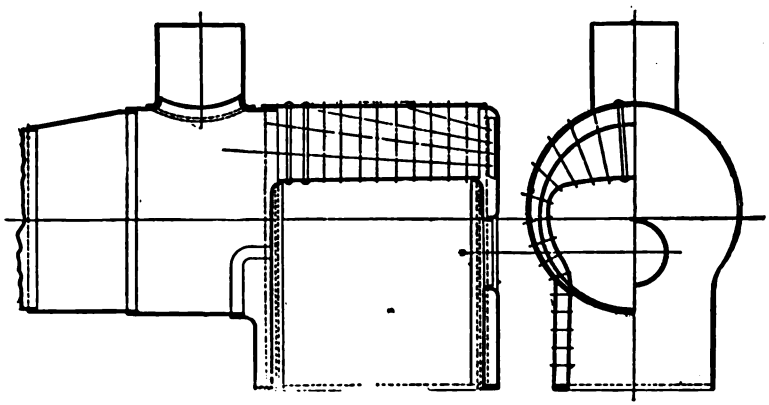

FIG. 348.

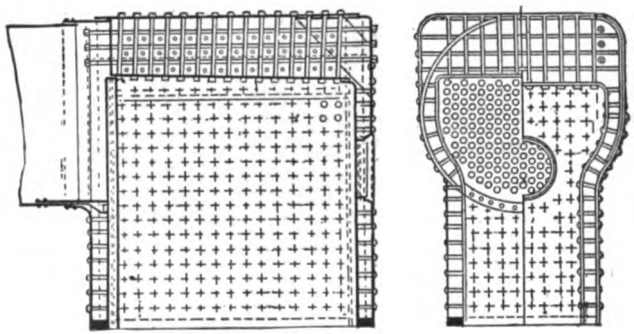

FIG. 349.

ance to bending is depended on if they can be short. Figs. 348 and 349 show other methods, used either where the crown-sheet is arched to approach parallelism with the outer shell, or where the outer shell is made flat to become parallel with the flat crown-sheet. The stay-bolts have taper surfaces under their heads, which draw into tapering reamed holes in

the sheet by the pressure of the steam, and copper washers under the head help to secure tightness. Fig. 349 is called the Belpaire fire-box. (See also Fig. 432.)

Staying should not be too rigid, and it is very objectionable to have a flexible and a rigidly stayed surface attached to each other. The motion of the flexible part either from heat-expansion or by pressure produces a great strain or a concentration of the deformation at the margin where these tendencies to move and to resist motion meet. This is what tends to shear stay-bolts, and to weaken joints or plates by grooving at the edge of the rigid area.

221. Manholes.—In the construction of riveted shells a provision must be made to allow the helper to get out who has "held up" for the final riveting of the last joint. Access must also be had to the inside of the boiler for inspection when in service and for repairs. The function of this hole is thus to let a man in and out, and is for this reason called the manhole. It should be as small as possible to effect its purpose, because the metal of the shell removed to make it is just so much strength removed from the boiler. Measurements show that the average man is fourteen inches on the axis of the longest dimension through the articulations of the hip-joints with the pelvic bone. The shoulder dimension, though naturally larger, is flexible and contractile, and any man can pass through a hole through which his hips will pass. The dimension at right angles to the line through the hip-joints is normally less than the other, and is a flexible one when it is not less. Hence the manhole receives an elliptical shape with its long axis 14, 15, or 16 inches long, and its short axis 9, 10, or 11 inches, or four or five inches less than the other. This elliptical shape has furthermore a very practical advantage, in that the lid which is to cover the hole and must have a size larger than the hole, so as to lap over the edges, can be made to fit upon the inside of the hole and can yet be itself passed through the hole from without. The lap over the edges must be less than one half the difference

between the long and short axes of the elliptical hole. If the hole must be circular, the lid has to be external.

The lid is held to its seat over the manhole when internal partly and mainly by the pressure upon its inner side; but to make the joint steam-tight, and to hold it from displacement at other times, the lid has one or two studs symmetrical upon its long axis, which pass up through a proper hole or holes in a bridge or "dog" of cast or wrought iron which spans the manhole-opening, so that when the nut is screwed down upon the stud and bears on the outer surface of the dog, the lid is drawn to its place and held firmly by the nip of the dog upon the edges of the hole (Fig. 350). The joint between

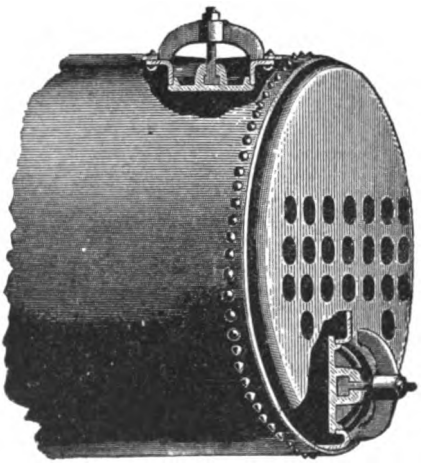

FIG. 350.

the lid and the plate is made tight by a gasket of rubber or asbestos-board or similar material whose compressibility shall compensate any inaccuracy of contact-surfaces. It is rare that finish of surfaces can be secured or maintained which will make a true metal-and-metal joint without gasket under the conditions prevailing around a manhole. The hole cut in the plate of the boiler leaves the strength less than when the metal was solid, at the zone whose width is the span of the hole. All the circumferential strains in the ring of plate are transferred around it till at the edge of the hole they are balanced by

no counteracting force except that supplied by the reluctance of the material to split into filaments by yielding sidewise. The tendency can be illustrated by a band of elastic material like rubber with a hole punched in it. Under strain lengthwise the hole becomes deformed, and most so at the ends or at the points farthest from the solid material at the sides of the hole. Hence it is desirable not only to place the hole, if in the shell, with its short axis lengthwise, but also to reinforce the weakened plate around the edge of the hole; and this practice has given rise to manhole mouthpieces or nozzles. The simplest form is a forged ring of wrought iron (more desirable than a similar ring of cast iron) riveted around the edge of the hole in the plate. The lower surface will be plane to form the flat seating for the cover, while the upper surface conforms to the shape of the boiler. The rivets are in countersunk holes on the face of the seating, or else the ring is broad enough to allow the line of rivet-heads to come beyond the lap of the cover. Such ring resists the tendency to flex which will occur when the manhole is upon a cylindrical surface and metal has been cut away which would maintain the shape when the pressure came upon the continuous ring of plate. Fig. 351 shows the ring made of a

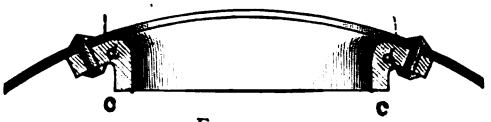

FIG. 351.

flanged plate riveted within the shell, and Fig. 352 the exterior nozzle arrangement. The interior seating offers some advantages from the resistance to flexure which it offers.

FIG. 352.

The location of the manhole will be either upon one of the heads, or upon the head of the dome of the boiler, or upon the shell, or upon that attachment called the mud-

drum. On the cylindrical or spheroidal surfaces of shell or dome or drum, seatings or nozzles are a necessity, to secure planes for the covers to seat themselves upon; on flat surfaces they are desirable for strength and stiffness. The construction of the boiler may require more than one manhole, a condition frequent in marine practice.

222. **Hand-holes,** as their name indicates, are smaller openings in the shell to give access to the hand for an inspection by touch, or for convenient cleansing or minor repair. The construction is the same as for the manholes, the reinforce or seating being of boiler-plate or a flat ring of wrought iron. Their location and number will be determined by the design of the boiler in order to serve their purpose and leave no corner which inspection cannot reach.

223. **Edge-planing and Calking.**—The shearing of the steel plates to size has left an edge or selvedge of metal which is brittle and unreliable from the effect of the shearing-planes. This deteriorated metal should be planed away by a cutting-tool. Fig. 354 shows such an edge-planer for plate, the sheet being held by the clamping-screws as in a vise, while the tool traverses along the edge. It is convenient to give the edge a bevel in planing, which is not only of service for appearance' sake, but gives an edge at the lap or joint to be used in calking the seam.

Calking is done by upsetting the lower edge of the bevelled sheet into the joint by means of a round-nosed chisel held against the edge and struck with a hammer. Fig. 355 shows the method of calking with a round-nose tool, which is much to be preferred to the sharp-nosed chisel, although the latter is easier to use. The sharp corner of the sharp tool may indent the lower plate at the joint, and thus start the first crack whose ultimate consequence will be the weakening of the plate at that point, which the illustration suggests.

224. **Sundry Details of Construction.**—The expanding of tubes, the stiffening of flues, the dome, the mud-drum, and other special details of construction will be referred to under proper headings with the special types of boilers to which they particularly belong.

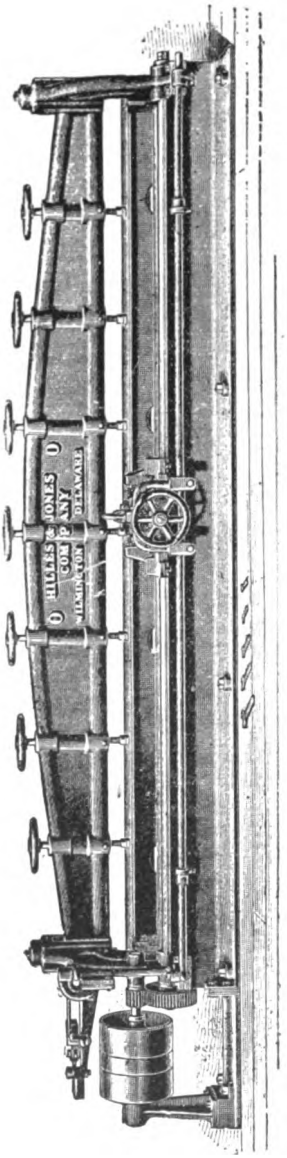

FIG. 354.

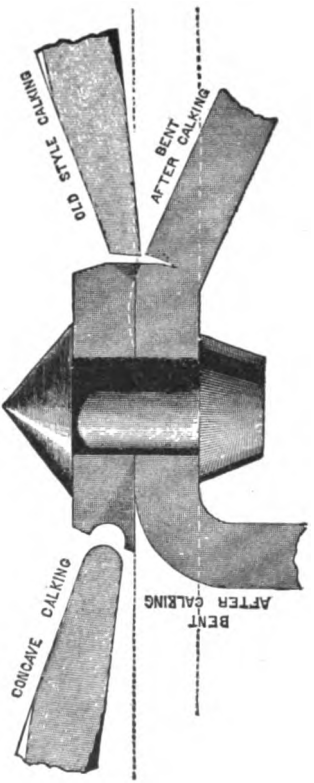

FIG. 355.

CHAPTER XX.

TYPES OF BOILERS. EXTERNALLY-FIRED SHELL BOILERS.

225. Classification of Types.—The most convenient division of types of boilers makes two great classes. The first group includes the externally-fired boilers in which the furnace or fire-box is outside of the vessel which contains the steam and water under pressure, and is provided for in the setting of the boiler. The second group includes the internally-fired boilers, in which the furnace or fire-box is within the pressure-structure which surrounds it either on all sides, or on all sides except the bottom. This salient difference gives rise to the most easily followed lines of study of the types. Another division whose significance will appear makes the two classes consist of the shell boilers and the sectional boilers; another scheme would put the marine boilers in one class, the locomotive boiler and its derivatives in the second class, and those types most frequently met in land or factory practice would make the third class. The division into externally- and internally-fired boilers will be followed, and within that first class the subdivision into shell and sectional types, and within the second class the division according to use or purpose. This will give rise to the following table:

Externally fired class:

- Plain cylinder boilers, Cylinder flue " , Cylinder tubular " } forming shell boilers.
- Sectional boilers.
  - Coil boilers.
  - Sundry types.

Internally-fired class:

Cornish, Lancashire, and Galloway boilers.
Locomotive and upright boilers.
Marine boilers.
Water-tube boilers and field-tube boilers.
Sundry types.

226. Plain Cylinder Boiler.—The plain cylinder boiler is historically the first successor of the earlier spherical boilers (called the haystack and balloon types) in England, and is the fundamental form of shell boiler from which the others have been derived. Between the spherical and the cylinder boiler came the wagon boiler of James Watt (Fig. 360), in which the surfaces were arched or convex inward. This construction favored the formation of the lateral flues for the passage of gases, according to the plan of splitting the column of hot gas or flame at the bottom and rear of the boiler, and having the hot gas touch the boiler all along the sides as well before passing out to the chimney. This horizontal turn of the gases was called the "wheel-draft" system. The concave surfaces were not adapted to withstand high pressures, because they tended to pass into the cylinder under internal pressure.

The cylinder boiler is supported between two parallel brick walls at a distance apart just equal to the diameter of the cylinder. The fire or furnace is at one end of the space between these walls, and the flame and hot gases surround the entire lower semi-cylinder up to the horizontal diameter, and transfer the heat from the combustion of the fuel by radiation and by contact to the metal of this semi-cylinder, and from this by contact and convection to the water which fills this part of the shell. The heads of the boiler may be either flat or hemispherical (egg-ended is the usual name), and may either be exposed to hot gases or not. The gases and flame will escape from the combustion-chamber behind the bridge-wall to the chimney-flue and so into the atmosphere. The bridge-wall forms the rear of the furnace. Fig. 361 will present a typical cylindrical boiler.

It is apparent that the cylinder should always be more than half full of water, or that the water-line should be above

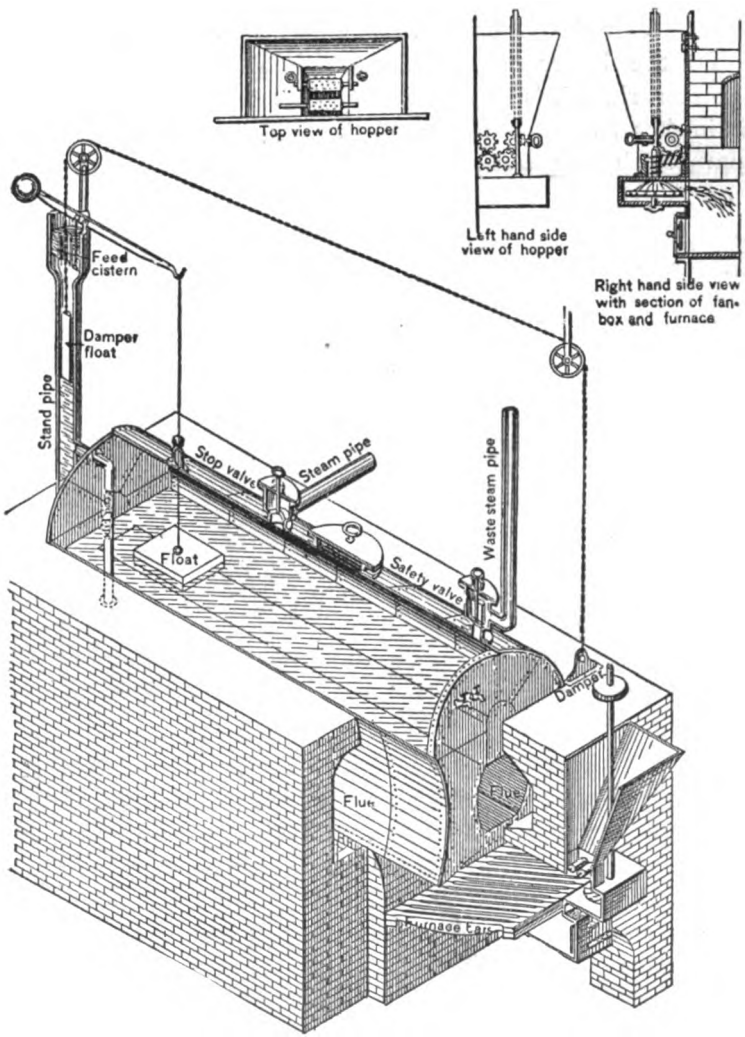

FIG. 360.

the horizontal diameter, in order that when the water fluctuates below its normal level there should even then be no

surface of the shell exposed to overheating, because exposed to flame or hot gas on one side and without cooling water on the other. This feature will be found common to all externally-fired shell boilers. Furthermore, it is not advisable to fill the boiler with water much above the horizontal diameter, since it is apparent that the free surface of the water diminishes as the boiler is filled. This free surface is that from which the bubbles of steam-gas generated by heat

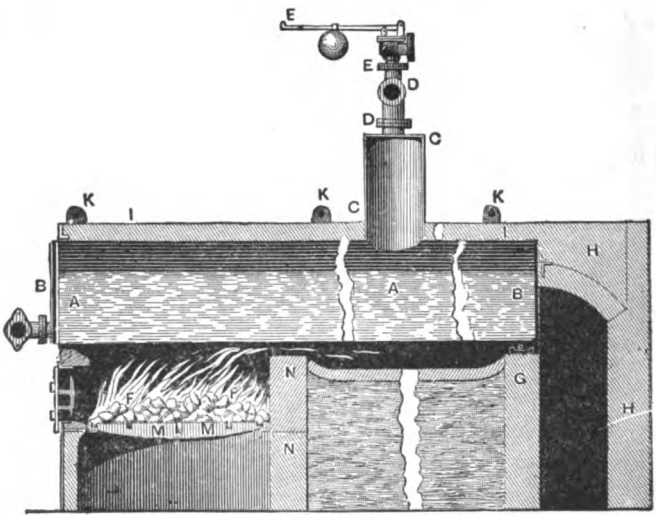

FIG. 361.

escape into the space above the water. It is called the "disengagement-area" for steam, and it is important that it should be large. If too much steam must escape from too small an area, the rising steam-gas keeps the surface of the water bubbling and frothing. The steam lifts the top layers of water, so as to give a fictitious indication of level of water, and entrains with it a proportion of water in drops or mist or even in some mass in its too rapid flow from the surface of the water to the outlet-pipe. Such a foaming or frothing is to be avoided, and the boiler which sends water into the steam-pipe is said to "prime." The presence of a scum of dirt or of grease increases the tendency to foam and prime,

because the steam-gas forces its way out by bursting through this scum, but to carry the water-level too high is not only to bring the disengagement-surface nearer to the pipe-outlet for steam, but it is also to diminish its area. A boiler forced to evaporate faster and disengage more steam than at its normal rate will also be likely to foam and prime.

The accepted standard for early practice was to make the volume filled with water (called the water-space) to be two thirds of the volume of the boiler, while the space in which steam is confined above the water (called the steam-space) should be the remaining one third. This was reached by making the area of the head to be divided by the water-line into segments whose area was as 2 is to 1.

This was an empirically correct ratio, based on observation, but lacked a rational basis, because the real store of steam is not in the steam-space, but in the heated water. A more satisfactory basis is the disengagement-area basis, and experiment has shown that when the flow of steam from the water into the steam-space is at a rate such that it would fill the steam-space three times a minute, the disengagement was slow enough to give no trouble from priming. This experiment was made on a marine boiler, and trouble was found from entrained water when the evaporation had to be so rapid that the steam-space was filled five times per minute; at four times per minute trouble was occasional but not continuous. Stated otherwise, a linear velocity of flow of steam faster than 2 feet per second through the water surface will entrain water with the steam. The larger the cylinder-volume to be filled per stroke, or the greater the number of strokes per minute, or the greater the volume of steam required per minute, the larger the aggregate steam-space required if pressure is not to be allowed to fluctuate when the disengagement-rate is normal and slow enough to prevent priming.

227. Domes and Steam-drums.—The difficulties in the engine-cylinder from entrained water have been referred to (pars. 161, 198), and the methods of getting rid of it. But most boilers are arranged specifically to diminish the danger

from excessive priming by helping to remove its cause. The dome which appears on most shell boilers is an upright cylinder of boiler-plate of some considerable diameter, up to two thirds that of the shell and so attached to it as to form part of the steam-space or an addition to it. In horizontal boilers it will have its axis at right angles to that of the boiler, and will be attached to it by flanging the sides of the dome outward, and curving the sides so as to fit the curvature of the top of the shell (Fig. 362). The shell is cut away under the

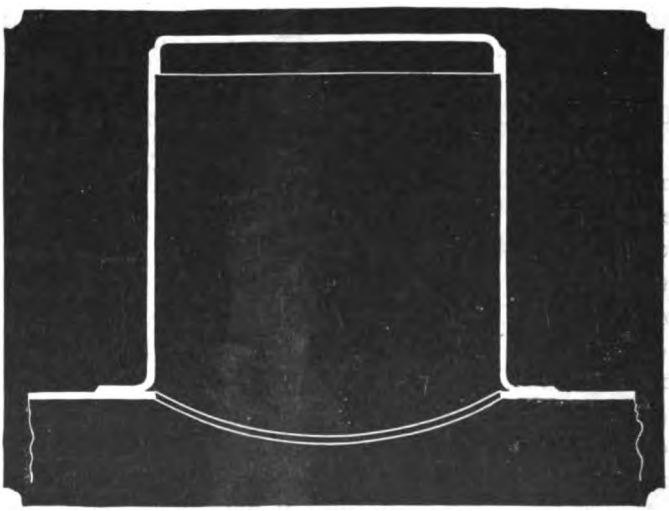

FIG. 362.

dome in the type form to the full diameter of the dome. The steam-outlet will be a pipe passing from the top of the dome or near it.

It will be apparent that the dome accomplishes three purposes:

(1) It removes the inlet to the steam-pipe farther from the disengagement-area than it could be if it were on the shell directly; water is less likely to spatter or be projected into the steam-outlet.

(2) The linear velocity of steam is low in the large cross-

section of the dome. Entrained water is less likely to be carried at low linear velocities than high, and it has time to separate out from the steam by its greater specific gravity.

(3) The steam flows to the dome from a larger proportion of the disengagement-area than it would to a small neck or nozzle on the shell. Under a neck or nozzle the water is heaped up (Fig. 373), and the greatest disengagement occurs at that point, a condition favorable to priming. The dome is usually put at that point on the length of a boiler at which experience shows the disengagement to be most active, so as to avail of this action, and to prevent injury caused by a disregard of the tendency there.

The objections to the dome are the weakening of the shell from the cutting away of the metal under the dome, whereby

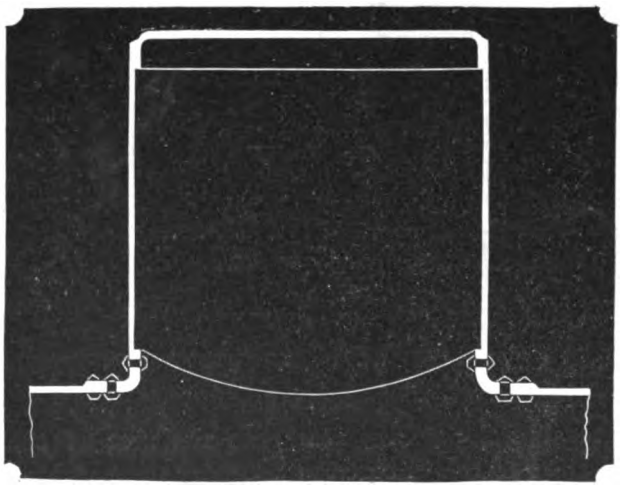

FIG. 363

not only is the strength affected, but the cylindrical shell tends to flatten under the pressure, and this results in leakage at the dome-seam at the top. The shell is an unstiffened curved stay where the hole is cut, and the double thickness of the lap of the dome-joint does not replace the strength of the unbroken cylindrical surface. Hence the dome-joint is

further stiffened, either by turning up the plate into a vertical flange, or by a stiffening-ring, as was described in manhole-seatings (par. 221). Fig. 363 illustrates these methods.

This objection to the weakening of the shell by the hole for the dome has induced designers to seek to secure the functions of the dome without such cutting of the shell.

(1) The shell has been perforated with either many small holes or one larger one under the dome, but not cut away entirely (Figs. 364 and 369). The area of the holes should

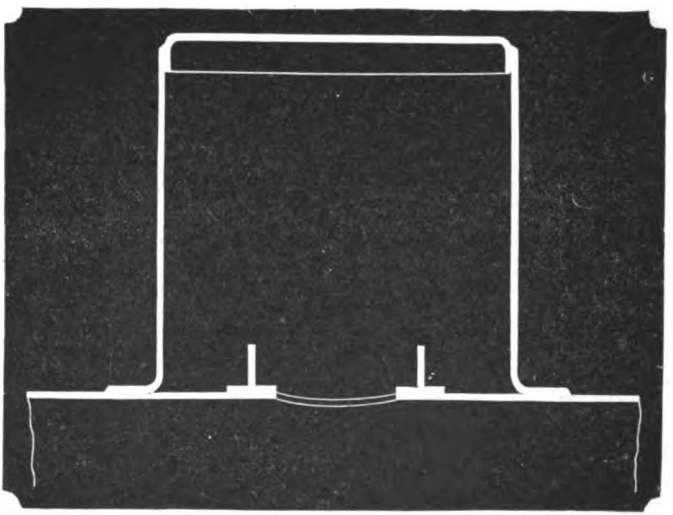

FIG. 364.

aggregate several times greater than the area of the pipe. The objection to this is that the tendency to straighten is not removed, because the pressure in the dome balances the pressure below the perforated surface, and there is no tendency to keep the cylindrical shape. The plate acts like a curved stay only. Moreover, the dome cannot be used as a means of entry to the boiler, unless the hole in the shell is the full size of a manhole, and the top of the dome does make a convenient place to enter and to place the manhole.

(2) To attach the dome by a neck (Figs. 365 and 371).

The flanges of the neck return some strength and stiffness to the shell. It is more convenient, if this is to be done, to make the dome a horizontal drum (Fig. 373).

(3) To use a horizontal drum or pipe of large diameter overhead, to which the boiler will be connected by a neck if but one boiler is used. This plan is specially convenient where several boilers are side by side or in a "battery," as it is called. All can deliver into a common drum, and from

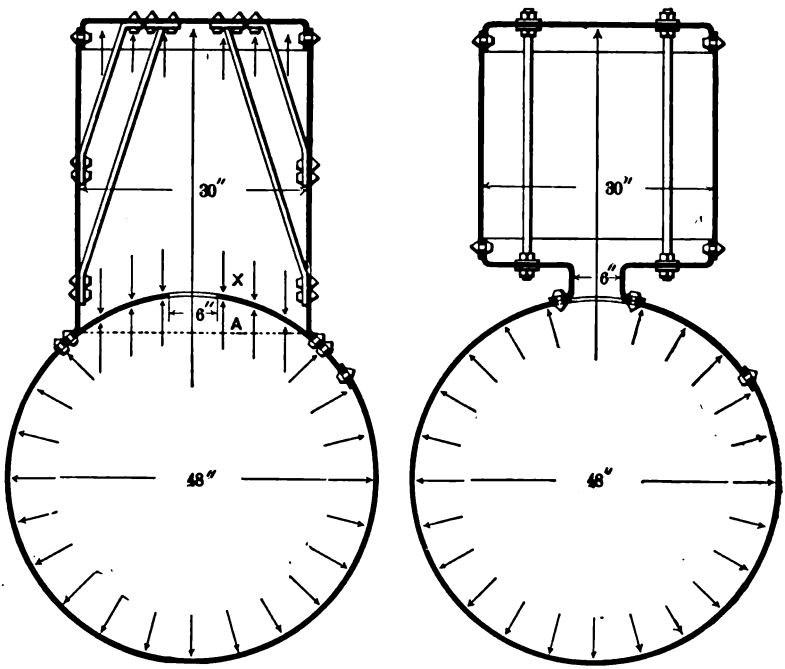

FIG. 365.

this a drainage-connection may remove any entrained water which may be carried through neck or nozzle by high velocity of steam-currents. Fig. 367 will illustrate this arrangement when the drum is transverse, and is really a large pipe merely jointed to each boiler by piping which allows of expansion without cross-strain. (See also Figs. 373 and 406.)

(4) The use of a dry-pipe with perforations. Fig. 368 will show this arrangement. The steam leaves the disengage-

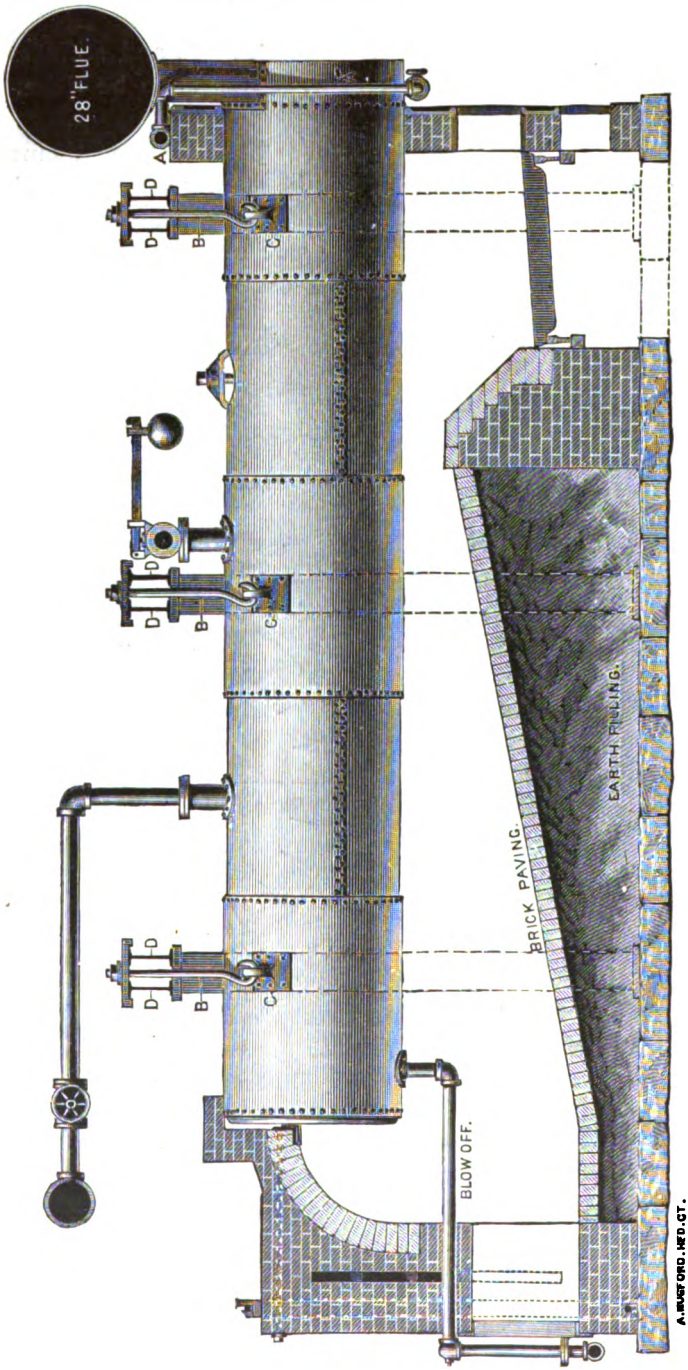
28" FLUE.
A
B
C
D
BRICK PAVING.
EARTH FILLING.
BLOW OFF.
A. BRADFORD, HFD. CT.

FIG. 367.

ment-surface to pass into the steam-pipe through a number of small holes in the interior pipe which is a prolongation of the steam-pipe inside the boiler. The gentle current into each opening prevents entrainment of water, because the aggregate area of openings is in excess of the area of the pipe. The objection is the stoppage of the inlet-holes in muddy waters. This is an arrangement used in marine practice and in some locomotives. The weight of the dome is an objection on board ship, and an elevation of the centre of gravity of the boiler, and on some locomotives the dome has been objected to because, in addition to its other drawbacks, it stands in the way of the view of the engineman. Where the locomo-

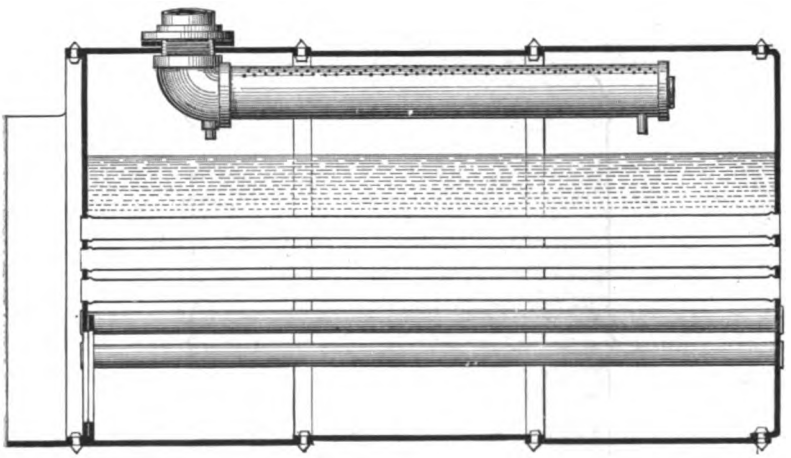

FIG. 368.

tive-boiler has a dome the throttle-box will be near its top, and the pipe to the cylinders runs down through the steam-space. With a perforated dry-pipe the throttle-box will be at that end of it at which it comes out through the front head of the boiler.

(5) A form of separate dome has been used for marine boilers on smooth waters in which the dome is an annular cylinder and has the smokestack-flue pass up through it. This has prevailed in river-boat practice, and was particularly

convenient in wooden hulls, because the "steam-chimney," as such dome was called, could get no hotter on its outside than the heat of the steam. The dome was high, and the effect of the hot chimney-gases within it was to dry or even to superheat the steam in the annular space (Fig. 384).

Dome-heads are sometimes made of cast iron for moderate and low pressures. The greater thickness of metal required with cast iron is convenient for attaching manhole-fixtures, valves, and pipe-outlets, and the dome-head is not exposed directly to heat nor to sudden changes of temperature. The unreliability of cast iron (par. 203) is still against it even

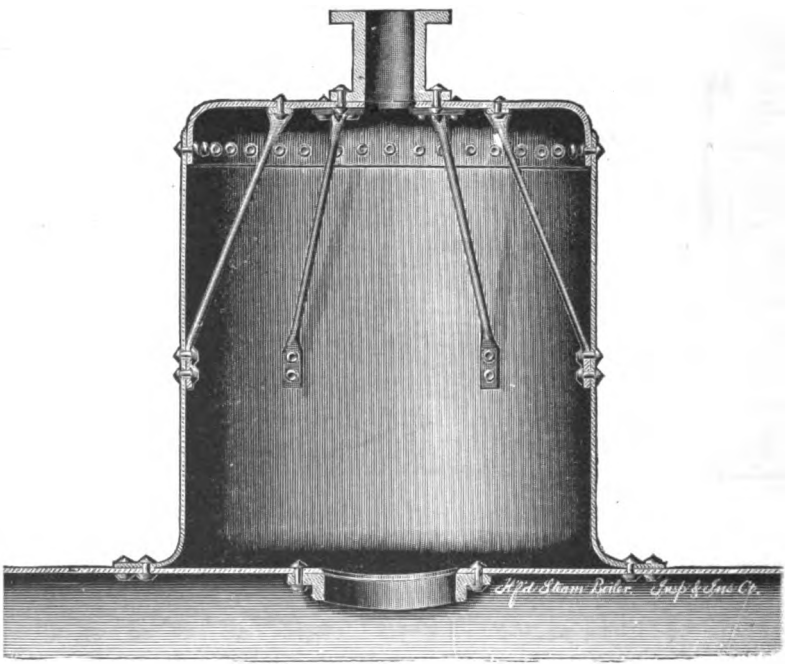

FIG. 369.

here. Flanged wrought iron or steel is better and will be generally used, and will be universal for high pressures and large diameters, especially where staying must be done (Fig. 369).

228. Conditions Suggesting the Use of the Plain Cylinder-boiler.—The plain cylinder-boiler offers advantages to be weighed against those to be urged for its derivative forms when the following conditions have preponderating weight:

(1) For a given length and diameter, or space covered in ground-plan, the plain cylinder-boiler holds the most water. Water has the highest value for its specific heat, or a given weight or volume of water will hold more heat stored in it than anything else except some chemical solutions. Hence, when heat is to be reserved in a boiler, to meet sudden and excessive demands for heat and steam for a short while, the great weight of heated water will give up this stored heat, and will supply much steam, with but a slow fall of pressure as steam is withdrawn. On the other hand, if the steam is regularly drawn, but there are periods when heat is insufficiently supplied or is supplied in excess, the weight of water gives out steam without calling at once for more heat to keep up pressure in the first case, and absorbs and stores the excess in the second case, without rapid and perhaps dangerous rise in pressure. In other words, the storage capacity for heat in the mass of water keeps the pressure uniform under variations in demand for steam and in supply of heat. This property of the cylinder-boiler makes it a safe type, and has made it a preferred type in iron-making plants where waste gases are used to heat the boilers. The gases vary widely in heating effect, both from varying quantity and composition.

(2) The cylinder-boiler, being all open within and free from perplexing corners where cleansing would be difficult, is adapted for use in places where the water to be evaporated contains salts or mineral matter which will be precipitated on the shell of the boiler upon boiling, and will remain behind when the pure steam-gas is withdrawn. The cylinder-boiler is more easy to clean than any of its derivatives.

(3) The cylinder-boiler does not compel the products of combustion (flame particularly) to pass into or through flues where their temperature is so lowered that chemical union with oxygen is prevented or delayed. The relatively cool

metal of the boiler-shell only meets the hot gases where the latter are in considerable volume. Hence the cylinder-boiler is of advantage with gas as fuel, which makes a long flame, or with oil, or with such coals as, having a large proportion of volatile constituents, burn with a long flame—which will be one of over sixteen feet in length. There is no limit but convenience to the length of a cylinder-boiler, and it can be so long that the flame may burn completely and still keep imparting heat by radiation to the shell, while if the flame is compelled to intimate contact with the cooler metal the flame is extinguished, and the carbon remaining unburnt appears as lamp-black in the current of hot gas, and smoke from the chimney shows that carbon has been wasted.

229. Objections to the Plain Cylinder-boiler.

(1) The large weight of water makes it slow in getting up steam.

(2) It is not a rapid-steaming boiler in the sense that a given ground-plan does not give a large heating-surface to supply a large weight of steam in a unit of time.

(3) To utilize the heat of a hot furnace the boiler has to be long, so that when the gases leave the boiler-setting to pass to the chimney they shall have parted with all available heat. The hanging of a long boiler is either dangerous or troublesome if strain is to be avoided, as will be discussed in paragraph 266.

These difficulties, which are practical ones and real, have put the cylinder-boiler at such a disadvantage, as compared with its derivatives, that it will only be used where its disadvantages are outweighed by its offering some paramount advantage.

230. The Elephant or French or Union Boiler.—Under these several names are included derivatives of the plain cylinder-boiler in which two or more cylinder-boilers are superposed in the same setting, the several components being joined by vertical necks or nozzles. In the elephant boiler the two cylinders have the same diameter, the lower one being usually the shorter. In the French boiler there may

be one or two lower cylinders. In the union boiler the lower cylinder is apt to be the larger, and may have tubes through it, and, in place of the separate necks, the boilers may be united along their whole length. Fig. 370 shows the short elephant type or "double-decker," and Fig. 371 the French arrangement. Fig. 372 shows the long elephant boiler for blast-furnace use, with the lower cylinder on a grade to help circulation and drainage.

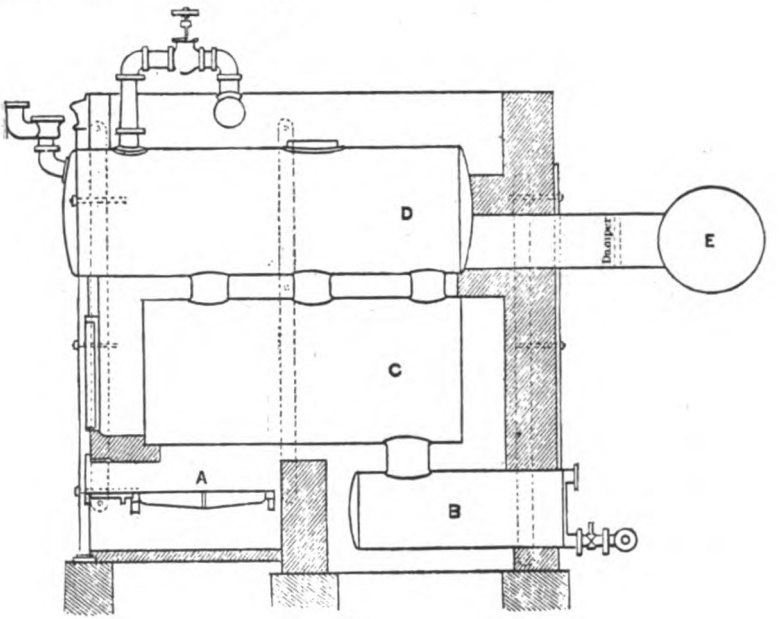

FIG. 370.

The elephant or superposed arrangement increases water-storage, and therefore heat storage, with a given diameter of shell for each cylinder, and without increasing ground-plan area. The smaller diameter of the cylinder makes it safer against rupture. Heating-surface is also increased. The objections to the type are the uncertainty of the circulation of steam-bubbles and hot water within the two cylinders, since the steam formed in the lower boiler must reach the disengagement-surface and the steam-space by ascending

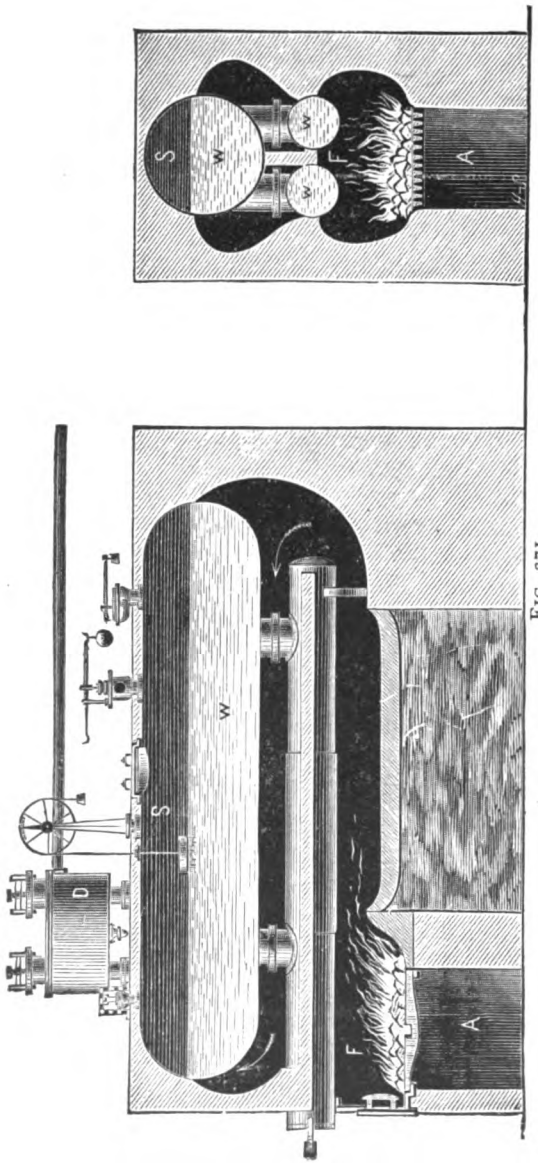

FIG. 371.

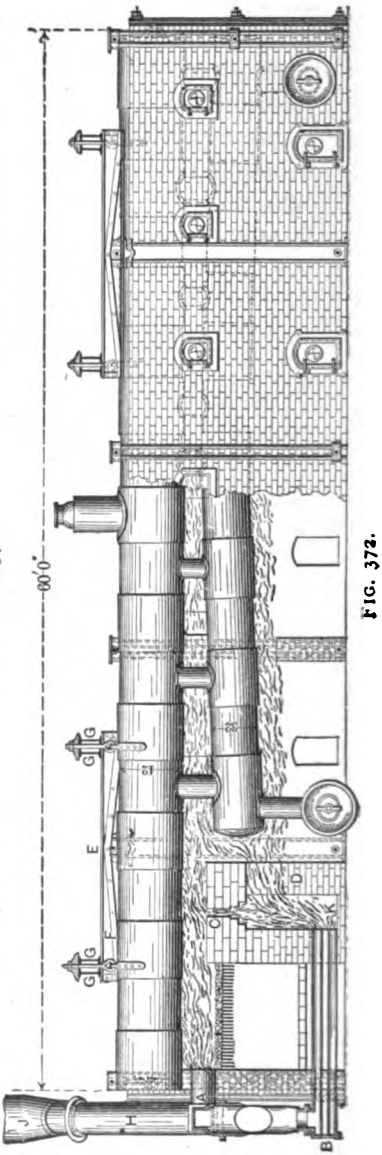

FIG. 372.

through the same necks down which must come the water to replace the steam which has been made. Fig. 373, which is drawn to show the circulation in a boiler with a steam-drum and two connections, will illustrate this point. A second difficulty is from the unequal expansion of the upper and lower boilers, which concentrates its effect at the necks or nozzles, straining them and causing them to leak. These types have been much more important than they are now.

231. Mud-drum.—The use of the cylinder-boiler with impure waters has given rise to the use, with this type and with many others, of the appendage called the mud-drum. It is intended to catch and hold precipitated solid matter in

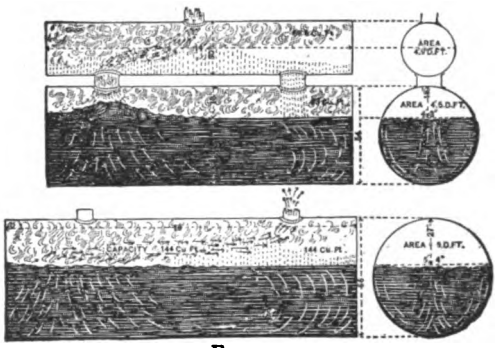

FIG. 373

the water of the boiler, and keep it if possible from settling upon parts of the heating-surface where its presence would do more harm. Hence the mud-drum will be an inverted dome or a drum at the bottom or coolest part of the boiler, and connected with it by a neck or nozzle in line with those currents of circulation within the boiler which will direct descending solid matter into the drum; with the view that, when once within the drum, the absence of circulation therein would prevent any mud or like material from coming out again. The mud-drum is therefore withdrawn from contact with hot gases by encasing it in brick, or by having it where the gases only meet it when cooled by contact with other parts of the boiler. Fig. 431 shows the mud-drum *B* with an axis parallel to that of the boiler. It is often transverse to the

boiler in other forms. It usually has a manhole-opening, and from it the blow-off pipe is attached, so that mud can be blown out by opening the valve with pressure within the

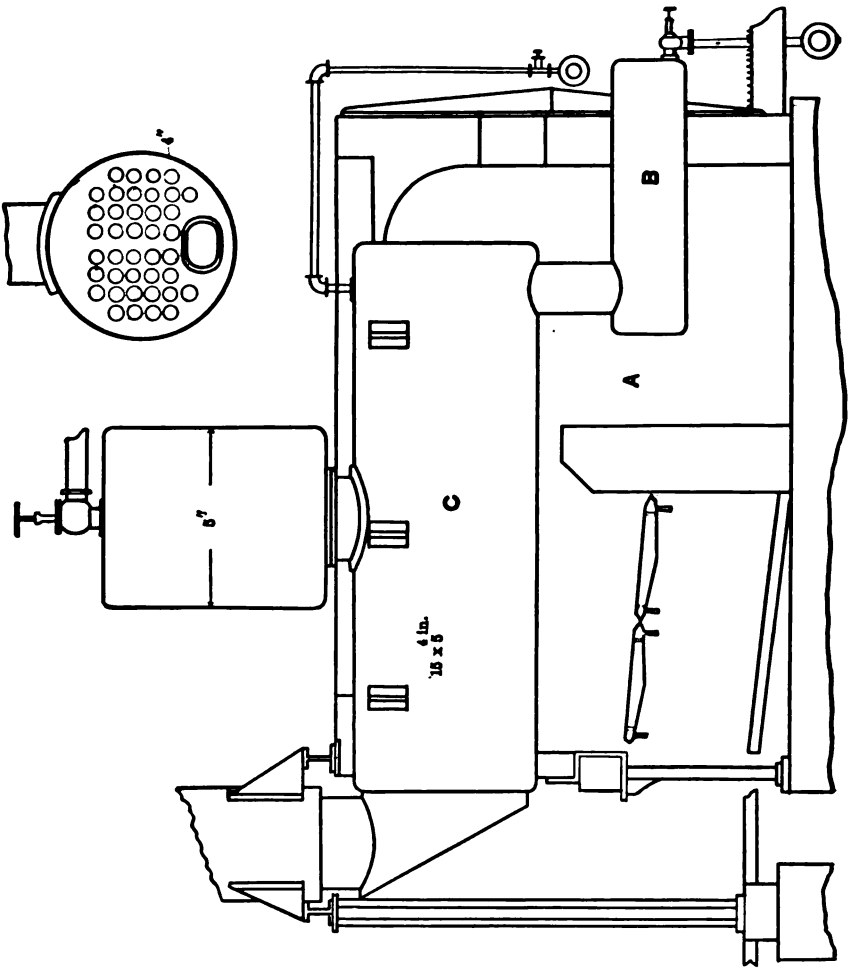

FIG. 431.

boiler. The feed-pipe delivering fresh water to the boiler sometimes enters the mud-drum, but this is not the best place.

The mud-drum in pure waters often reduces to a very small appendage or disappears entirely. The difficulty with

it occurs when care has not been taken to guard against its expanding at a different rate from that of the boiler itself, because cooler, while rigidly attached to the latter and not free to move. This brings strain at the connecting neck or necks, followed ultimately by leakage and by corrosion at those points.

232. The Cylinder Flue-boiler.—In order to avoid an inconvenient length of boiler and yet cool the furnace-gases as far as possible before allowing them to escape to the chimney, these gases may be taken at the back of the boiler after having traversed the bottom of the shell, and brought to the front of the boiler by means of flues made of proper conduct-

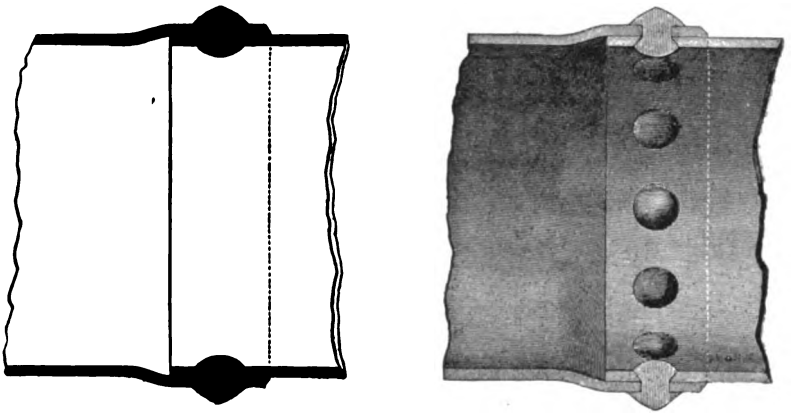

FIG. 374.

ing material and passing from head to head through the space heretofore filled by water in the cylinder-boiler. The effect is to increase the heating-surface in a given ground-plan and to secure more effective cooling of the flame or hot gas by a transfer of its heat to the walls of the flues which are cooled by the water which surrounds them. The gases turn upward in a space at the rear head of the boiler, which will be called the "back connection," and from this space enter the flue or flues.

In externally-fired flue-boilers there will be usually two, three, or five of these flues, if of large size, traversing the

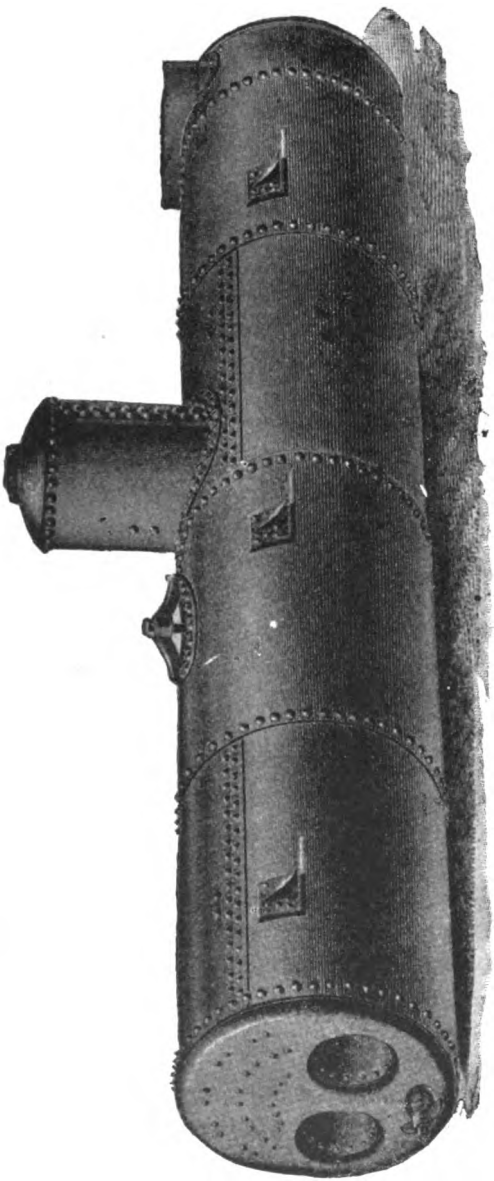

FIG. 375.

water-space. They will be made of boiler-plate, riveted or welded, or (if not of too large diameter) of lap-welded boiler-tube. The necessary length of flue will be secured by joining lengths together either by lap- or butt-joints riveted, by welding, or by the upset- or bump-joint (Fig. 374), in which one tube is enlarged enough to receive the end of the other. But the length of the flue-boiler is limited by the convenient length of such flues.

The joint with the heads will be made by flanging the edges of a hole inward until the projecting flange will permit the flue to be riveted to it, with the flue inside of the flange (Fig. 375). The flange might be turned outwards if the gases were never to be hot enough to overheat the projecting ends of flange and flue, which will only be kept cool by conduction from the metal which touches the water (Fig. 379). The metal of the flange made on the head is inside the water in the other arrangement.

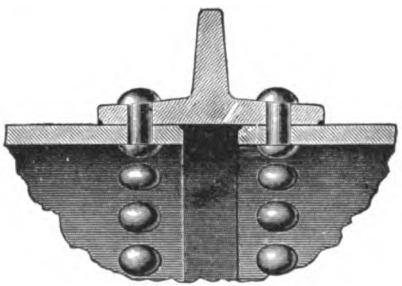

FIG. 376.

The flue is exposed to the pressure in the boiler with a tendency to be crushed inwards or collapsed by such pressure. A cylindrical flue of small diameter and homogeneous structure ought to be strong to resist collapse, but a local overheating combined with the effect of the weight of the flue itself often tends to produce a local deformation, after which the areas exposed to pressure are no longer equal and collapse proceeds rapidly. To strengthen large flues against this tendency they are usually built with stiffening-rings around them in the water which keep them cylindrical to pressure,

or they are corrugated ringwise with the same object. These stiffening-rings are either plain rings with light pressures, or else the ring receives a greater transverse resistance by being made of angle or tee iron (Figs. 376 and 377). The distance-

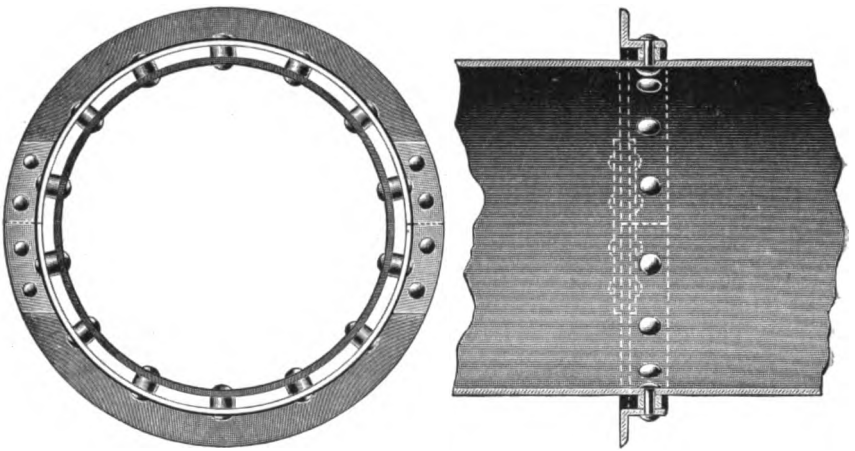

FIG. 377.

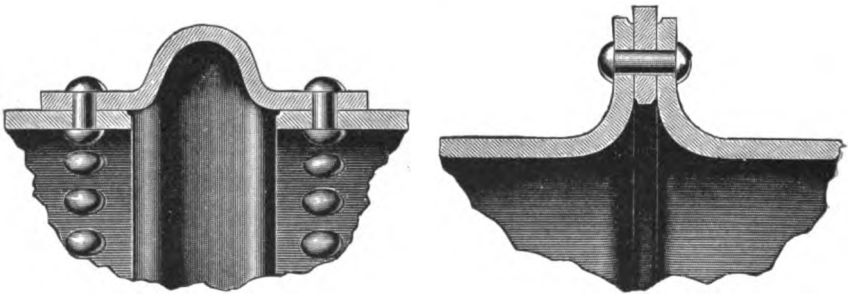

FIG. 378.

pieces or thimbles keep water in intimate contact with the flue-metal, to guard against overheating. Fig. 378 shows two joints for the rings which have more flexibility for freedom of expansion than is given by positive joints, and this is an advantage which they offer. The flue and shell of the boiler need not be nor remain at the same temperature, and will therefore have different lengths, tending to push or pull upon the heads and flex them back and forth if the flues and shell

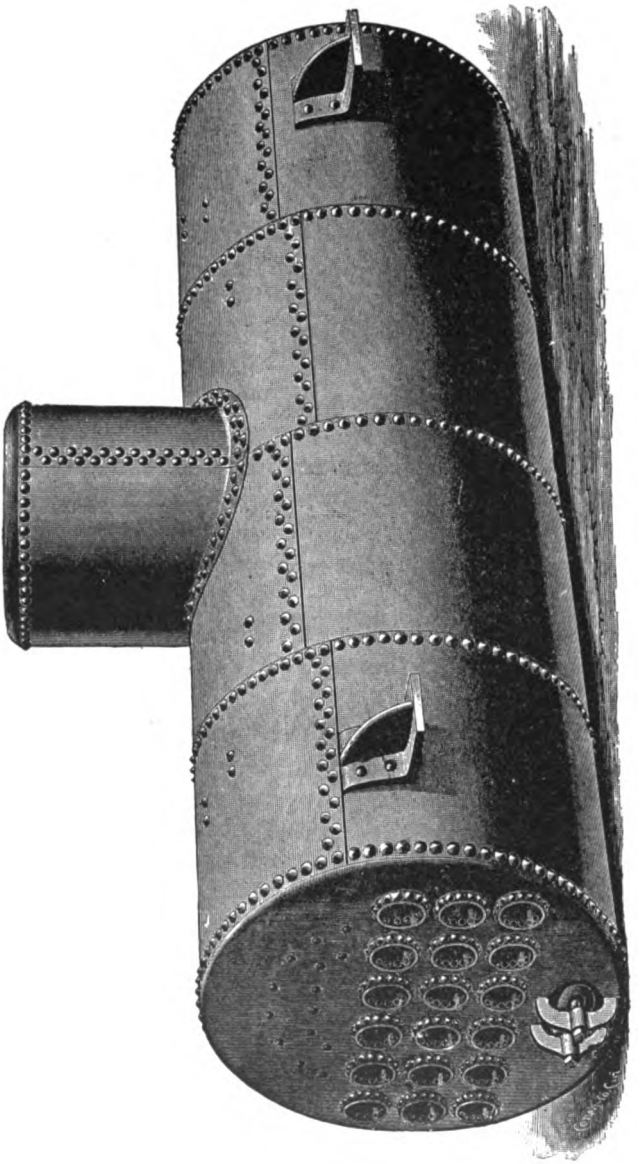

FIG. 379.

are both rigid. The strength given by corrugation will be referred to under internally-fired boilers, in which such corrugations are more frequently applied.

233. Uses and Application of the Cylinder Flue-boiler.— The flue-boiler will be used with advantage in the same conditions as the plain cylinder-boiler. It is adapted for convenient use with bad feed-waters, and for fuels having volatile matter or gas which burns with a long flame which the flues are large enough not to extinguish. The flues have diminished the amount of water which the boiler holds (Fig. 379), and so the pressure will fluctuate more rapidly, but the flue-boiler makes more steam than the cylinder-boiler, and more rapidly. Until the advent of the sectional types it was the ironworks type of boiler, and with many feed-waters it is still.

234. The Cylinder Tubular or Multitubular Boiler.— If the hot gases are passed through the water-space of the boiler in a large number of small tubes, instead of by a small number of larger flues, another type of boiler results. The difference is only in size of tube and the fine subdivision of flue-gases which results. A tube of seven inches in diameter or over is a flue before the law, and a flue of less than six inches in diameter becomes a tube.

The small diameter of the tube makes it necessary to fasten the tubes to the heads by a special process called expanding, which is discussed below.

The diminished size of the tubes makes it possible to get in a great number of them through the water-space, thus enormously increasing the heating-surface, but in horizontal boilers it is not desirable to crowd tubes into the water-space unduly, nor to make them of too small size. If made too small, the friction of the gases may prevent the proper draught through them. If too near together, they impede the circulation of the water (see Fig. 373) and the convection of heat, and prevent the free and rapid release of the steam-bubbles formed at the bottom and among the tubes. If grouped too close to the shell, they preclude inspection and cleansing of the shell. Best modern practice groups the tubes in two nests,

separated by a vertical space between them where there are no tubes, and no tube in either nest comes nearer to the curve of the shell than four inches. The bubbles and circulation-currents rise in the middle space, and the descending currents go down in the four-inch spaces at the sides.

The tubes may be arranged in vertical rows at the same time that they are in horizontal rows, or they may be staggered, so that the tubes in one row are beneath the spaces in the row above and below it. The staggered arrangement gets in the greatest number of tubes, but is not so favorable to free circulation of water and steam-bubbles among the tubes, and no access is possible to lower rows of tubes for cleansing or for scraping off of scale.

Tubes should not come nearer together than three quarters of an inch, and one inch or more is to be preferred. If the tubes must be staggered, it is better to make the horizontal spacing greater than the vertical spacing so as to favor circulation, and this is advisable if convenient even with the all-vertical rows.

235. **Boiler-tubes.** — The usual boiler-tube is of lap-welded wrought iron or steel. It is manufactured from carefully selected stock, and carefully sized as to its external diameter, by which its nominal size is determined. The length of such tubes is either twelve or sixteen feet, so that tubular boilers are apt to be designed to be either eleven or fifteen feet long to prevent waste. It is not convenient to have the tube much more than sixty diameters in length. It is inconvenient to joint such tubes unless one length of tube is quite short. For short and costly boilers for high pressures drawn steel tubes have been used which have no seam, but have been reduced from a solid ingot by drawing over a mandrel. These are coming into increasing use as the manufacture of assured and satisfactory quality of tubes of proper size becomes more general. Brass and copper tubes have been much used in fire-engine-boiler practice by reason of their high conductivity for heat. They introduce, however, a tendency to a galvanic action in the boiler, under which the iron ele-

ment suffers corrosion. The aggregate cross-section of the tube-openings in a boiler has been called its calorimeter, and with natural draught it should be equal to or a little greater than the cross-section of the chimney-flue into which the tubes deliver. The accepted proportion for this latter area is one eighth of the area of the grate under the boiler on which the coal is burned.

236. Ribbed Tubes. Serve-tubes. Retarders. — A special form of boiler-tube has been used to some extent, which is fitted with ribs lengthwise, or is thickened at several points of its inner circumference (Fig. 380). The object of this is to arrest more completely the available heat in the hot gases flowing through the tube, so that from this extra metal the heat may be abstracted by conduction. A somewhat similar function is discharged by what have been called retarders in the tubes. A cross-shaped bar the length of the tube is laid within the ordinary cylindrical tube, and absorbs heat from the gases, which it transfers to the tube by radiating such absorbed heat, as well as acting to retard the too-

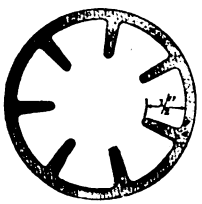

FIG. 380.

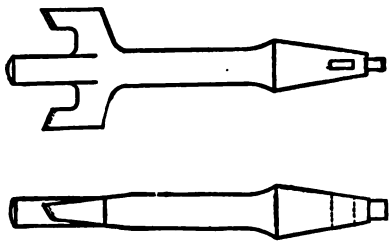

FIG. 381.

rapid flow of gas at such a rate as would prevent complete transfer of heat to the tube.

An objection to the ribbed tube is the difficulty in cleansing it when the gases deposit a sticky residue on the cooler surface of the metal. The retarders are cleansed by being taken out.

237. Expanding of Tubes.—The tubes of a tubular boiler require to be fastened securely and water-tight to the two

heads—sometimes called the tube-sheets. The process is known as "expanding."

The heads are drilled with properly spaced holes, of a size just to admit and pass the tube. Hence comes the necessity for a standard dimension for the *exterior* diameter of such tubes. The holes are usually drilled by a lip-drill (Fig. 381) or tit-drill, in which the central nipple is guided by a smaller hole first drilled in the axis of the larger hole. The pilot hole is more easily drilled in its true position than the larger one, because the cutting-planes of the small drill come to a smaller edge at its point, and less trouble and time need be taken to keep the drill to line in starting. The hole made, the tube is passed through, and when in place the tool called a tube-expander is inserted within it and at the proper distance. Types of the expander are shown in Fig. 382.

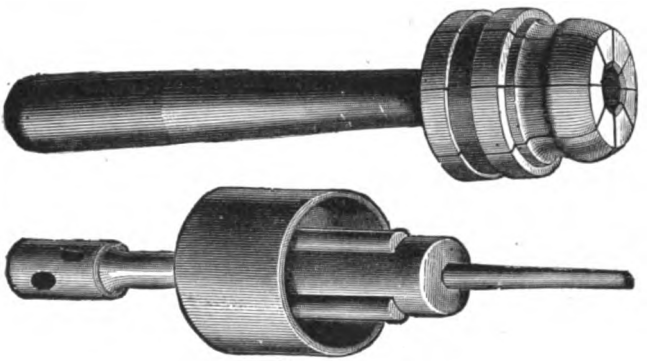

FIG. 382.

In the roller form three rollers are borne upon segments which guide them, and upon which radial pressure can be brought by the central conical or tapering pin. When the rollers inside the tube are opposite the tube-sheet or just behind it, upon the inside of the tube, the rollers are forced outward and revolved inside the tube. The rolling pressure causes the metal of the tube to flow outward until the resistance of the hole in the tube-sheet is encountered. Then the tube and the hole are pressed to fit each other (Fig. 383) with a force usually sufficient to be steam-tight and having a very

considerable strength. To prevent the tube and its sheet from sliding under changes of length due to temperature, the end of the tube is slightly turned over or upset—called beading—so as to grip the outer face of the tube-sheet. This both adds to strength and serves to prevent leakage. The beading is usually done with a special form of swaging-chisel, often called a " thumb-swage " from the shape of its pressure end, which has a longer prong which enters the tube, while the shorter prong projects over the annular tube end, and gives an aspect suggesting the combination of index-finger and thumb on the human hand.

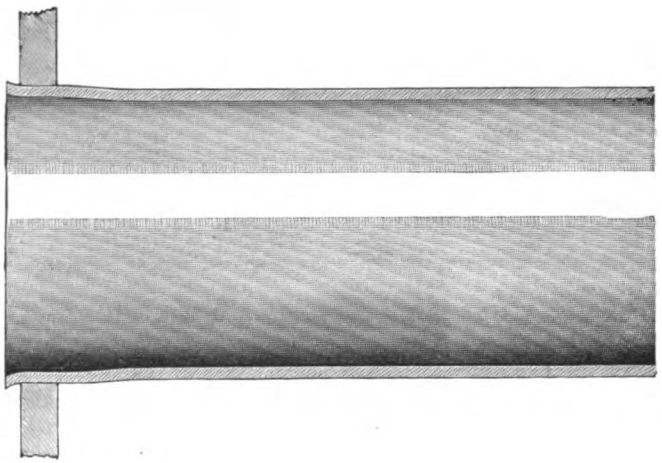

FIG. 383.

There are other forms of tube-expander, acting by wedging or direct pressure, but the roller form takes less power and gives better results. The fit of the expanded-tube is a pressure and frictional one. Hence any tendency to push or pull the tubes through the tube-sheet (from heat or from yielding to pressure) causes the expanded tubes to leak in their holes. With high pressures a certain proportion of the tubes—one in five, often—are made of extra-heavy stock, so as to allow for a greater strength due to the more efficient heading or beading of the thicker metal. Or, again, with thicker stock in the stay-tubes, the outside which projects beyond the

sheets can have a thread cut on it, upon which a stay or lock-nut will be screwed home, and thus convert the tube into a through-stay. Such stay-tubes will be located where the tendency of the heads to flex under the pressure needs particularly to be guarded against.

Expanded tubes can be re-expanded so as to be made tight if leakage should be developed by service; but this cannot be done very often, since the metal must undergo a pressure in expanding which transcends the elastic limit of the material (otherwise it would spring back when the expander was withdrawn), and as the result the tube is apt to crack when the process is overdone.

238. Staying of Tubular and Flue Boilers.—The tubes and flues-serve not only to tie together the two heads or flue- and tube-sheets to which they are fastened, but they also serve to lessen the pressure on these surfaces because the area occupied by them can have no pressure upon it. Hence in such boilers the staying will be limited to the upper segments of the heads and above the water-line.

The water-line will be so adjusted to the top of the tube- or flue-surface that there shall always be at least three inches of water above the tubes or flues even when the water-level has descended to the level considered the danger-point. The method of staying may be any of those discussed in par. 220.

239. Uses and Application of the Cylinder Tubular Boiler.—The great heating-surface in a compact form and the efficiency with which the numerous tubes extract the heat from the currents of hot gas, have made the tubular boiler the type which will be usually met where it can be wisely used. It is therefore almost a standard for the externally-fired type. It presents the following features:

(1) Great heating-surface in a small space.

(2) This gives it ability to make steam rapidly, and a great deal of steam from a given area of ground occupied, as compared with the preceding forms.

(3) This evaporative capacity is cheaply bought. The tubular boiler is not an expensive one, but is the cheapest of

the efficient types, costing under ordinary commercial conditions from $8 to $11 per horse-power.

(4) The water is subdivided by the tubes into small masses, securing immediate transfer of the heat of the metal of the tubes to all parts of the volume of water. Hence the boiler responds promptly to an attempt to force it.

As objections to the tubular boiler may be advanced:

(5) The water-space is so filled with tubes that access to the lower parts for cleansing is difficult, and to some places is impossible. This objection is a fatal one if water is to be fed to the boiler which has great amounts of salts in it which are precipitated on boiling.

(6) The fine division of the gas-currents in the small tubes will so lower their temperature that they are extinguished. If the flame would naturally be longer than the length from the furnace to the entry to the tubes, the extinction of the incandescent particles on lowering the temperature makes the gases smoky, and carbon is wasted as soot. The fine subdivision in tubes is also fatal to further union of carbon with oxygen, and combustion, if not completed before the gases enter the tubes, will either be incomplete, or else will take place beyond the boiler at some possibly inconvenient place —such as the top of the stack or at its throat.

It is these considerations which have made the multitubular boiler the prevalent type with anthracite or other short-flame fuel, and with the pure waters of New England. Its advantages have made it desired even where flaming fuels and poorer water would point to the use of the flue types.

CHAPTER XXI.

TYPES OF BOILERS. EXTERNALLY-FIRED SECTIONAL BOILERS.

240. Definition of a Sectional Boiler.—A sectional boiler is a steam-generator in which the plan of a single enveloping shell to contain the water and steam is abandoned and is replaced by that of a number of small generating vessels so joined together that the steam formed in all of these separate units or sections is delivered from a common disengagement-surface into a common steam-space. The sectional principle may be carried in a boiler of large capacity to the extent of subdividing the disengagement-area, so that the steam from several such areas shall be delivered into a common steam-drum, from which it shall be withdrawn by the steam-pipe.

The discussion of par. 202 would suggest that these units or sections should either be spheres or cylinders or combinations of either. Practice confirms this, and the convenience and other advantages of the cylinder (which when of small diameter becomes a tube) will be found to give to most of the sectional boilers a tubular character. From the definition, however, these tubes will contain the water within them, and will have the heat applied on the outside. This fact makes them often known as "water-tube" boilers in contradistinction to the shell tubular boiler, which has its tubes "fire-tubes," and the water is outside of them but within the enveloping shell. The Harrison sectional boiler is the only type of importance based upon the spherical unit. All the others will be found to be water-tubular.

241. Advantages of the Sectional Principle.—The sectional principle offers certain advantages irrespective of the method followed by the builder in carrying it out.

(1) By subdividing into sections each section has a small diameter, or one much less than that of the shell of the shell boiler. Strength to resist rupture with a given internal pressure increases as the diameter is less (par. 207). Hence each section is far safer against rupture than the large shell with same thickness of metal, and the danger from explosion of the boiler is much more remote.

(2) The rupture or failure of any one of the units from overpressure or deterioration from any cause should not and usually does not cause the failure or loss of the whole structure. The failure of the unit should act as a safety feature, whereby pressure is released at one place only and before the other units are involved in any serious overstrain. Furthermore, the repair of any unit or section makes that part as good as new, and in this way the parts of the boiler may be gradually replaced and the whole structure become really new. It is, therefore, the safety of this type of boilers which has given it the great development of recent years as the pressures of steam have been increasing. The safety is not from the avoidance of all possible harm which a rupture may entail. The injury from escaping steam or hot water may be as fatal in either case. But the sudden release all at once of the enormous energy stored in the water of a boiler is much less likely to occur, and the train of disaster is avoided which would usually follow in the case of a similar failure of a large shell.

Since the great reduction in diameter which comes when the units are tubes would give unnecessary strength if the same thicknesses were used, it is more common to have thinner metal for the tubes. Hence follow:

(3) Lighter weight for a given evaporative capacity.

(4) Thinner tube-metal in the fire- or gas-currents makes rapid transfer of heat to the water to be evaporated, so that the heating-surface is efficient, or a less number of feet of heating-surface becomes permissible, though not always advisable.

(5) The sectional construction makes the boiler portable

and manageable so as to be put conveniently in places where access is difficult. The shell boiler must be handled as a whole, or built in place, if the doors or openings in walls are not large enough to pass it in or out as a whole. Sectional boilers can be put under finished buildings, or can be shipped beyond rail or water transportation and there assembled.

(6) Repairs and renewals are easy, cheap, and rapid, and can usually be made by available labor and skill, and entail but a short stoppage of the plant.

(7) The mass of the boiler which receives the action of flame and heat is less than in shell boilers.

(8) Sectional boilers can be driven further above their nominal capacity than shell boilers. In the horizontal tubular type such driving may be carried a little over 10 per cent; in sectional types it may be over 50 per cent excess, and even for a while as high as 100 per cent.

242. Disadvantages of the Sectional Principle. — The sectional principle, however, offers certain disadvantages, also irrespective of the method followed in applying it; but the degree in which any given form suffers from them may be different.

(1) The aggregation of units must be connected together steam- and water-tight under pressure. Unequal expansion (or contraction) of different parts or units must strain or loosen these joints, or flex or distort those parts whose length is changing, or wrench those to which they are attached if rigidly fitted to them. Efforts to mitigate this evil have given rise to the curved tube for the unit, instead of the straight tube, and underlie some forms of flexible connections for the units.

(2) The small unit principle precludes the idea of immediate personal access to the inside of the tube-surfaces for cleansing and inspection. This must be reached in some way or other in any form of generator which is to be properly called a safety-boiler. Hence there has resulted a prevalence of straight-tube units, to which access can be had from the end through a proper cap or hand-hole lid, and there is usually

a cap at each end, in order that inspection of the inside of the tube may be made with the eye at one end of the tube and a light or torch or candle at the other. The cap feature is also a necessity if a tube is to be renewed without dismounting adjacent ones.

The objection to the cap feature is the multiplication of joints, which must be faced or ground joints so as to be tight without gasket or packing, and which are an occasion of leakage, and therefore of corrosion, when not attended to most carefully. The multiple-joint objection belongs also to some types which have no caps

(3) The necessity for combining the evaporation of several tubes or units into one common duct or header, which is present in most of the types, makes the effective disengagement-surface become only that part of the water-surface which is near the outlets of these headers. The disengagement is therefore tumultuous at such points when the boiler is driven, and water-gauges applied near such parts show a fictitious water-level; and if the steam-outlet has to be near such part of the drum, the boiler is likely to prime.

(4) The circulation of the currents of water in any boiler is due partly to the presence of steam-bubbles, which are lighter than the hottest water, and partly to the action of the less warm water, which is heavier than the hottest water. In a shell boiler this circulation is untrammelled by any narrow passages where high velocity is called for. In the sectional types the circulation must be determinate; and if all units are to be full of solid water, the descent of cooler water must be just as fast and positive as the ascent of the steam-gas bubbles to the surface of disengagement. Where friction or scale or bad design prevents this free descent of heavier water, and where steam formed in the units displaces water but cannot itself escape to the steam-drum, the unit becomes overheated and oxidizes and corrodes, and its overheating lengthens it unduly and produces the difficulties discussed above under (3).

Defective or impeded circulation with waters which deposit scale causes the scale to settle in the tubes or units, causing

them to overheat and lengthen and produce the same trouble.

(5) Since the water is within the tube or unit, with pressure on it, the failure of such tube or unit compels the whole structure to be put out of use for the repair. When a fire-tube fails, a plug of pine wood can be fashioned for each end and securely driven home from without. The leakage swells the wood and keeps it tight, while preventing the wood from burning further than a protecting thickness of charcoal on the outer surface. Such plugs will last for months if a shut-down is inconvenient.

Furthermore, where tubes are attached in nests or groups, the repair to a middle one can only be done by removing those tubes which are outside or around it and which may not need to be removed for any other reason. This consideration has dictated the prevalence of the straight-tube type arranged in essentially parallel rows, and with free space in the line of the tubes endwise.

(6) Tubes or units which are so shaped or fitted that they cannot be inspected inside by the human eye for their entire length, or which are so curved that cleansing by scraper is uncertain or even inconvenient, are to be objected to or condemned outright, for many conditions if not for all.

(7) The gases pass too rapidly through the necessarily limited length of the tubular units, and leave the setting at too high a temperature, without having given all their available heat to the water.

(8) The workmanship and parts of the sectional boiler make it costly, per unit of capacity, as compared with the fire-tube shell boiler. While prices vary, the sectional is apt to cost from one and one half times to twice as much as the shell boiler, or from $11 to $18 per horse-power, with an average of $14 or $15 in large sizes.

243. Classes of Sectional Boiler.—The sectional-boiler principle may be attained in many ways, but they will group themselves for examination into a small number of classes.

First, the units may be spherical or tubular. There are

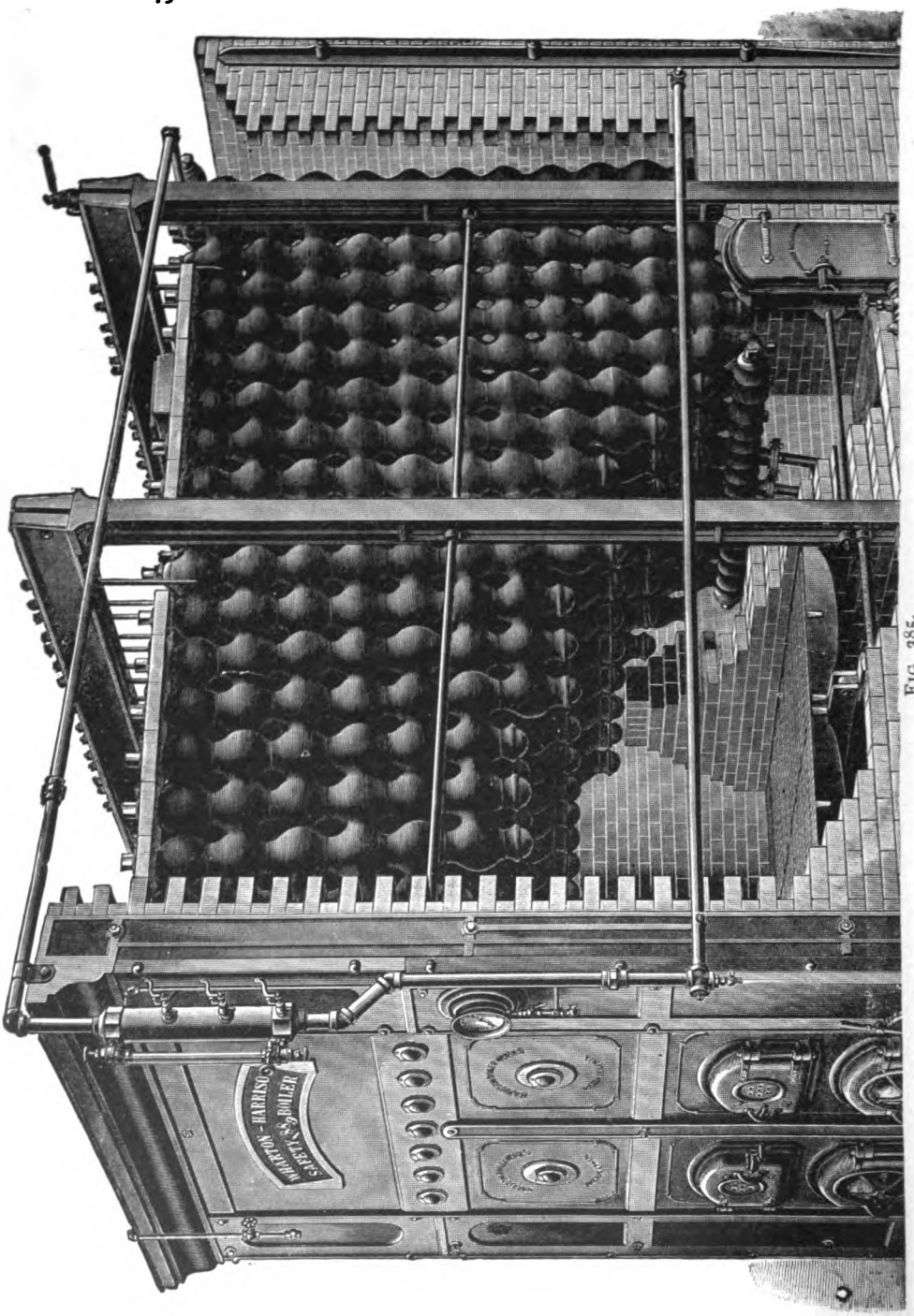

FIG. 385.

few examples of spherical units; the other class is more prevalent.

The tubular class may include:

(1) Straight tubes.
(2) Tubes curved at ends, straight in middle.
(3) Tubes curved for their whole length.
(4) Closed-tube types.

The straight-tube class may have the tubes inclined at about 15° from the horizontal, or inclined from the vertical, so that they are sometimes called, respectively, horizontal or

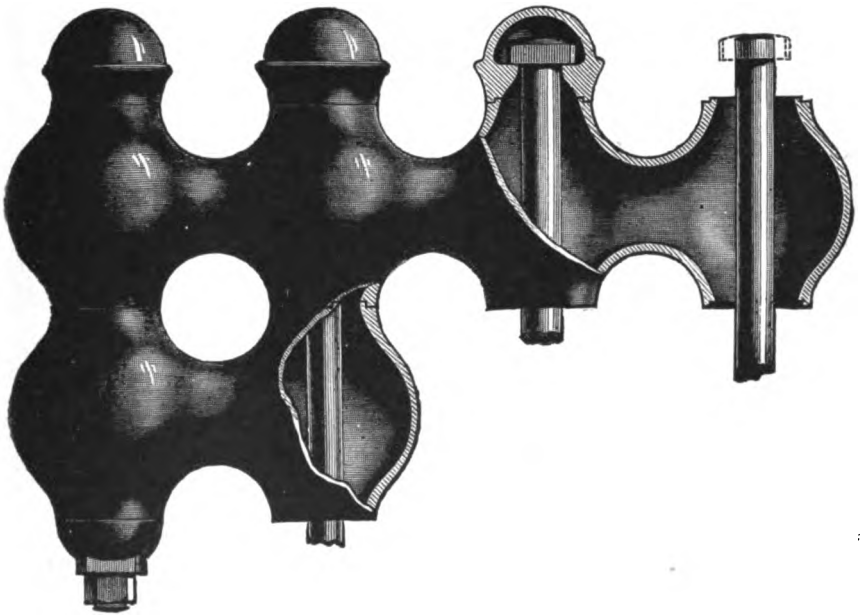

FIG. 386.

vertical tubes; and the curved-tube classes pass into the coil type when the curvature becomes continuous for any one tube for more than 360°.

These several types in practice are identified by their builders' or originators' names. The predominance of one type over another is so often in any one locality a matter of business enterprise or commercial achievement, and the im-

provements on each type are so much conditioned upon a leading personality in each period of use, that it becomes unsatisfactory to treat of the individual types by name or at length. Certain typical forms alone are presented.

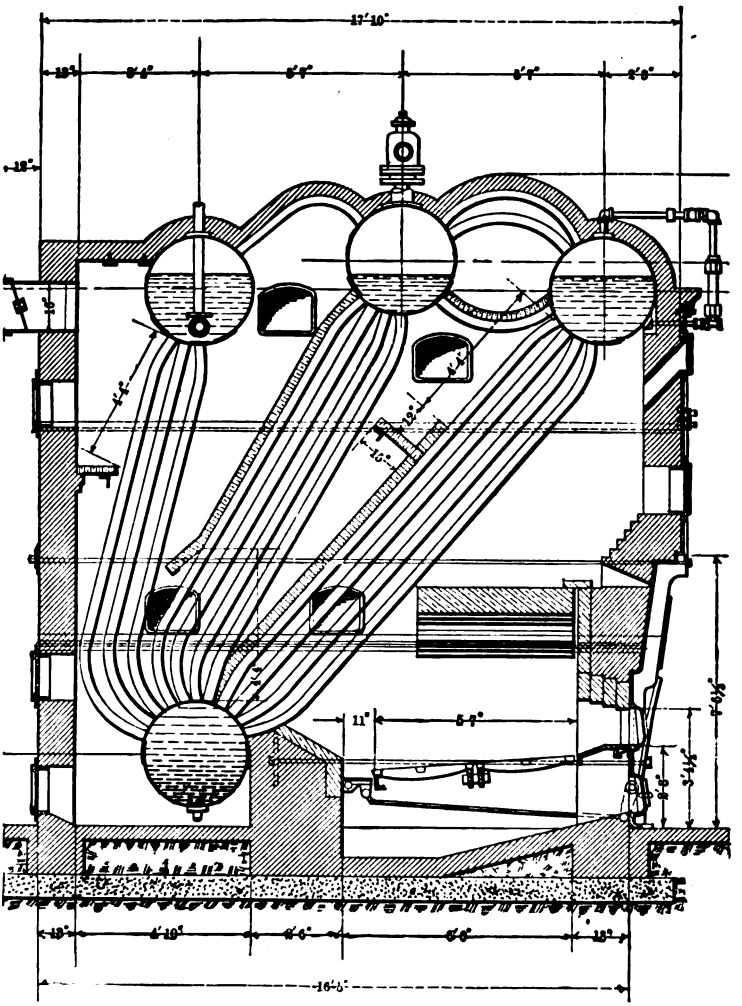

FIG. 387.

244. Spherical Unit Type.—Figs. 385 and 386 show a sectional boiler built up of spheroids of cast iron in earlier

forms, and latterly of steel castings of Bessemer metal. These each have circular openings which fit similar openings in the units above and below them, making a metal-and-metal rabbet-joint. The series of units is tied together lengthwise and

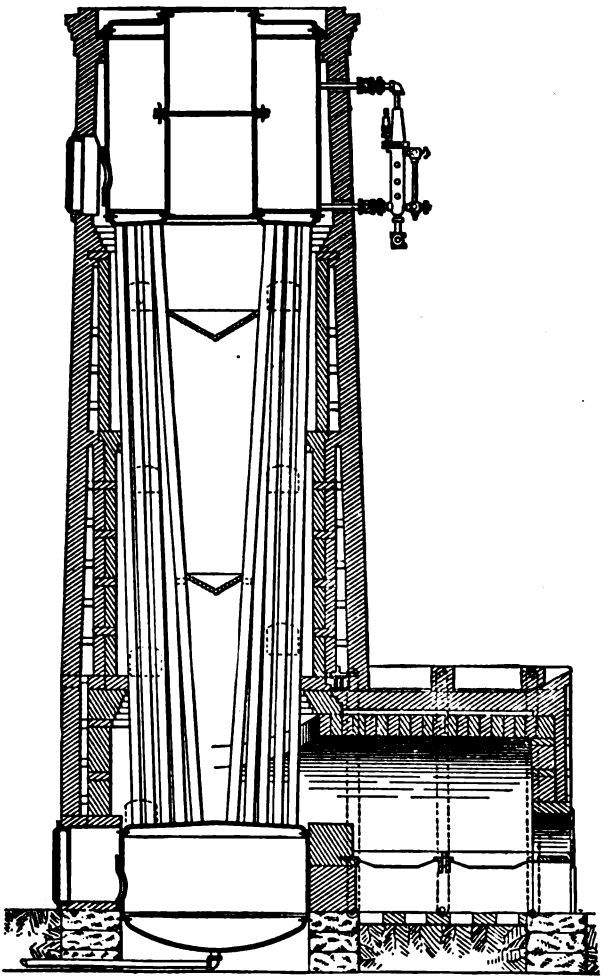

FIG. 388.

crosswise by wrought-iron tie-rods, which come out through the cap which closes the last openings in any series. These tie-rods not only provide the strength to resist the tendency

to separate, and furnish a flexibility for the connections, but also under excess of strain they will stretch enough to cause the joints of the units to leak and relieve some of the pressure. The wrought iron also gives to the cast-iron whole some of the properties which cast iron would lack if used alone or altogether. The boiler has some surface in the steam-space exposed to hot gases, which gives a superheating area which tends to dry the steam when the boiler is working slowly. It offers some of the disadvantages discussed in par. 242.

245. Vertical Tubular Type.—Figs. 387 and 388 show two types of the vertical tubular arrangement, one with straight tubes and the other with curved ends. The curve is introduced so that unequal expansion may flex the tube, and not work the tube in the fixed tube-sheets into holes in which its ends are secured by expanding. The tubes inclined from the vertical pass their steam-bubbles from each tube directly into the upper drum, and water from the lower drum supplies each tube directly and freely. This is the great excellence of these types—the great volume below and above the tube ends, and the independent disengagement from each tube at the top. Both violate some of the principles laid down in par. 242, particularly that concerning repairs to a middle tube, and many tubes in the process of curving become of unequal thickness from the curving pressures.

246. Horizontal Straight Tubular Type.—Figs. 389 to 395 present longitudinal sections and details of prevalent types of water-tube boilers with nearly horizontal tubes. It will be seen that the tubes are expanded, in series or sets, into headers. These headers are of cast iron or of wrought steel. Each tube has opposite to it an opening large enough to pass a new tube when renewal is necessary, and through which inspection and cleansing is done. This hole is covered by a cap in some forms, but in Fig. 395 the cap is replaced by a short connecting-tube whereby the individual header is coupled to its neighbor, instead of being in one piece with it. The spherical joint and the pressure-ring make the joint tend to tightness however the length of any individual tube may

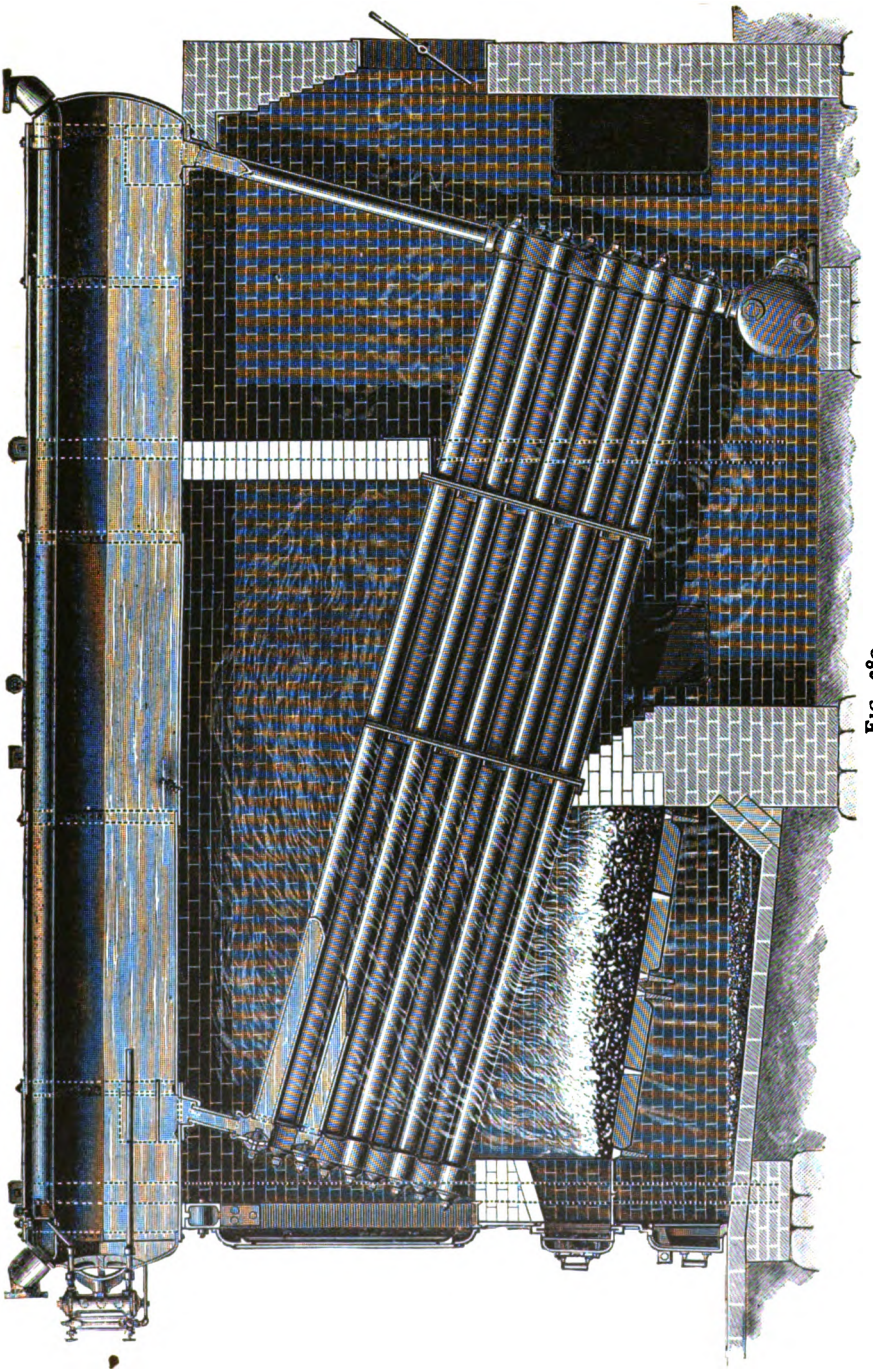

FIG. 389

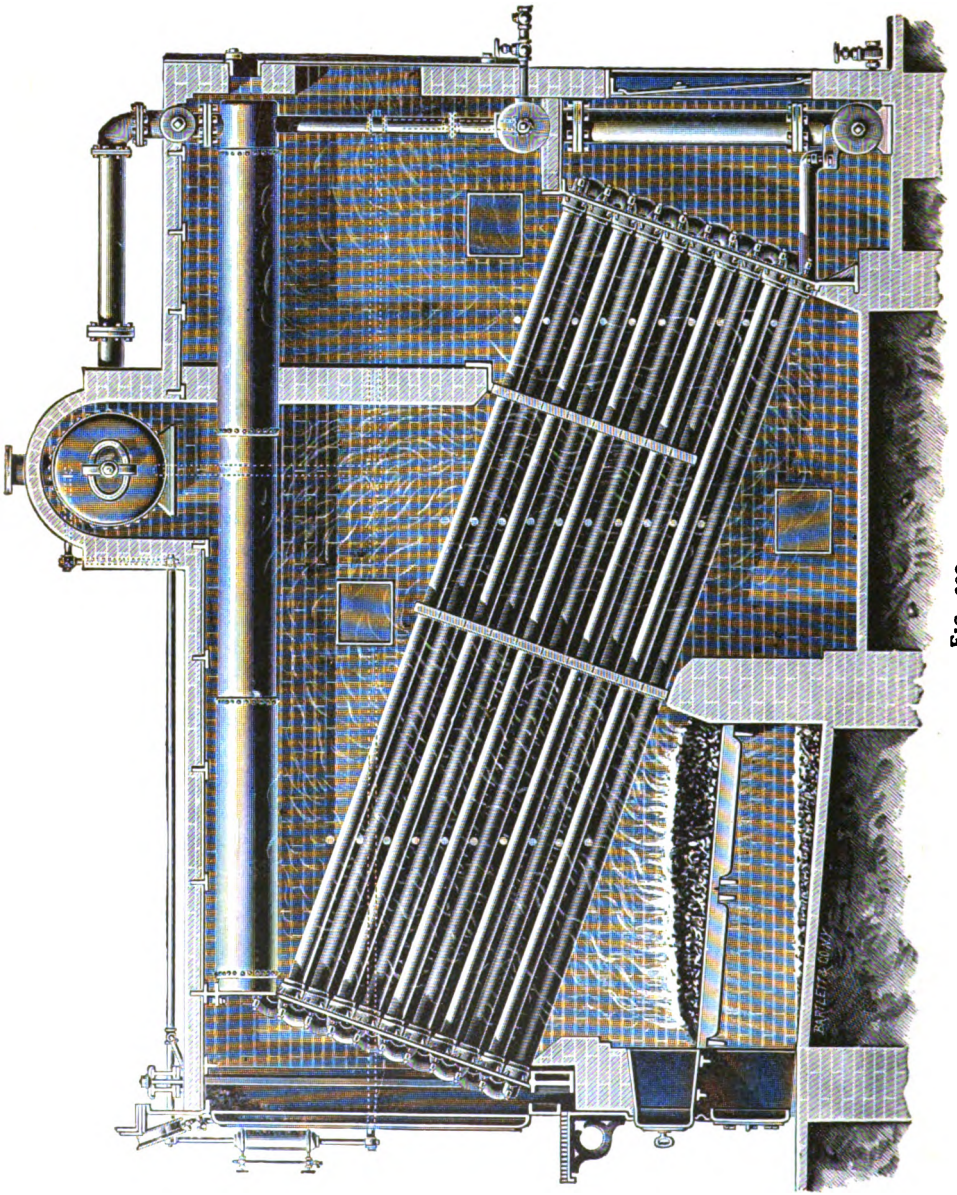

FIG. 390.

vary. Fig. 392 shows the cap on the outside. If the holding-bolt breaks from overscrewing, the cap blows outward

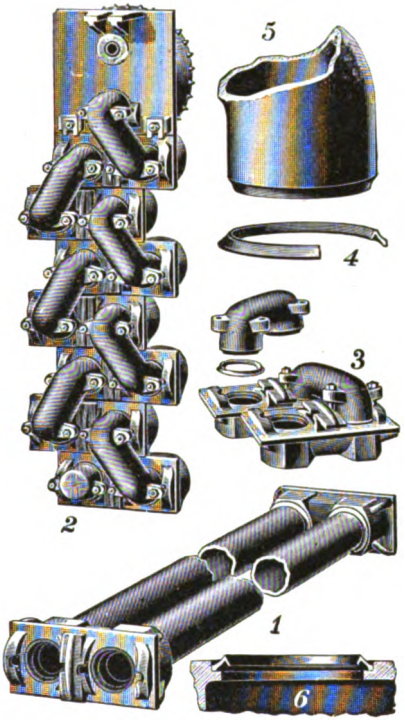

FIG. 395.

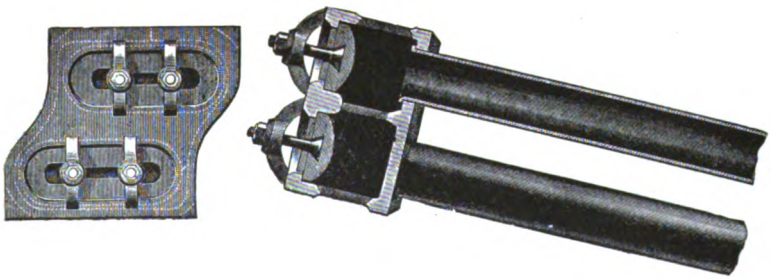

FIG. 396.

with great energy and releases hot water in a four-inch stream. Fig 396 shows an inner plate which will be forced outward

against the opening if the holding-bolt breaks, and tend to hold back the rapid flow of hot water.

The length of the descending pipe at the back of the boiler gives the descending energy to the cooler and denser water, while the water in the inclined tubes and front header is mixed with steam-gas and is also hotter. Hence the circulation should be determined by this arrangement. The mud-drum is coupled to each of the back headers at their bottom so as to catch descending solids which the current may propel beyond the tube-openings. The steam- and water-drum furnishes disengagement-area. The steam-outlet from it should be towards the rear and away from the higher water-level which prevails at that place when the front headers discharge into it. Fig. 391 shows a type in which separate headers are avoided and their joints, but the tubes are expanded into true water-legs at a fixed distance apart. Cleansing or renewal is done through holes in the outer plate of the leg, covered by caps.

247. Closed-tube Types. Field Tubes.—It has been sought by many designers to use a tube as a unit which shall be closed at the bottom, and shall open at its top into the water-drum in which lies the disengagement-surface. The tube requires to be of sufficient diameter that the ascending current of steam-bubbles shall not interfere with the descending current of water, and this double action seems best secured when the tube-unit is inclined about 15° from the vertical. Then the bubbles formed in the tube ascend continually along the upper elements of the tube, and the lower elements (which are those turned to the fire and against which the hot gases impinge) are always bathed by the descending water. This was a feature of the Allen boiler (Fig. 397), and although it suffered from the difficulty of repair to middle tubes, it has been a favorite idea among German designers. If, however, the tube is of small diameter, and ebullition is too violent or the tube too nearly vertical, the steam blows the water out of the tube, and it overheats and burns.

To prevent this trouble and insure circulation in water-

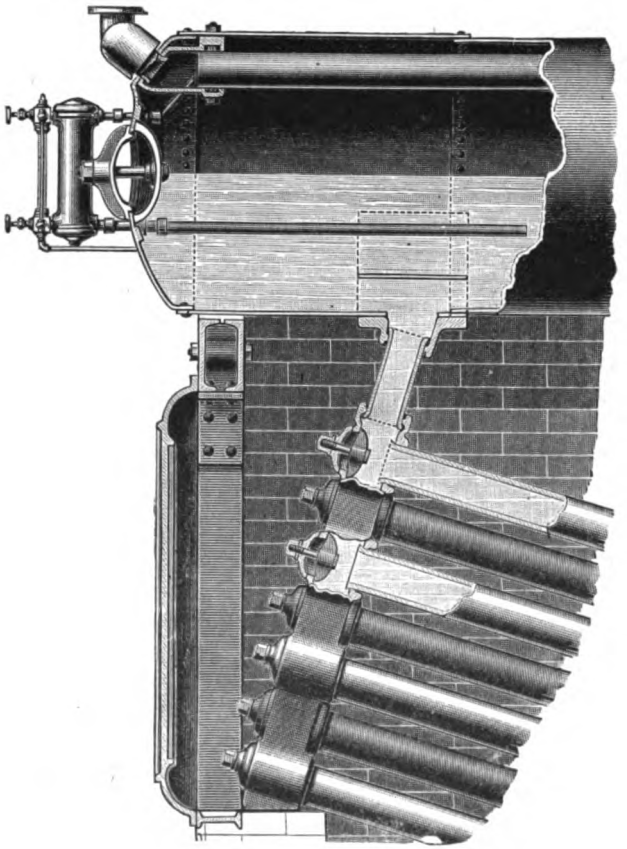

FIG. 392.

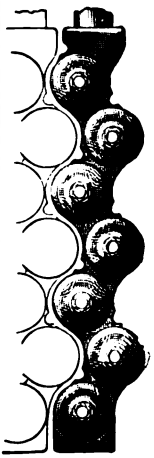

FIG. 393.

FIG. 393.

tubes which have to be of small diameter and essentially vertical, the double tube has been used, sometimes called the Field tube. Within the water-tube is an open inner concentric

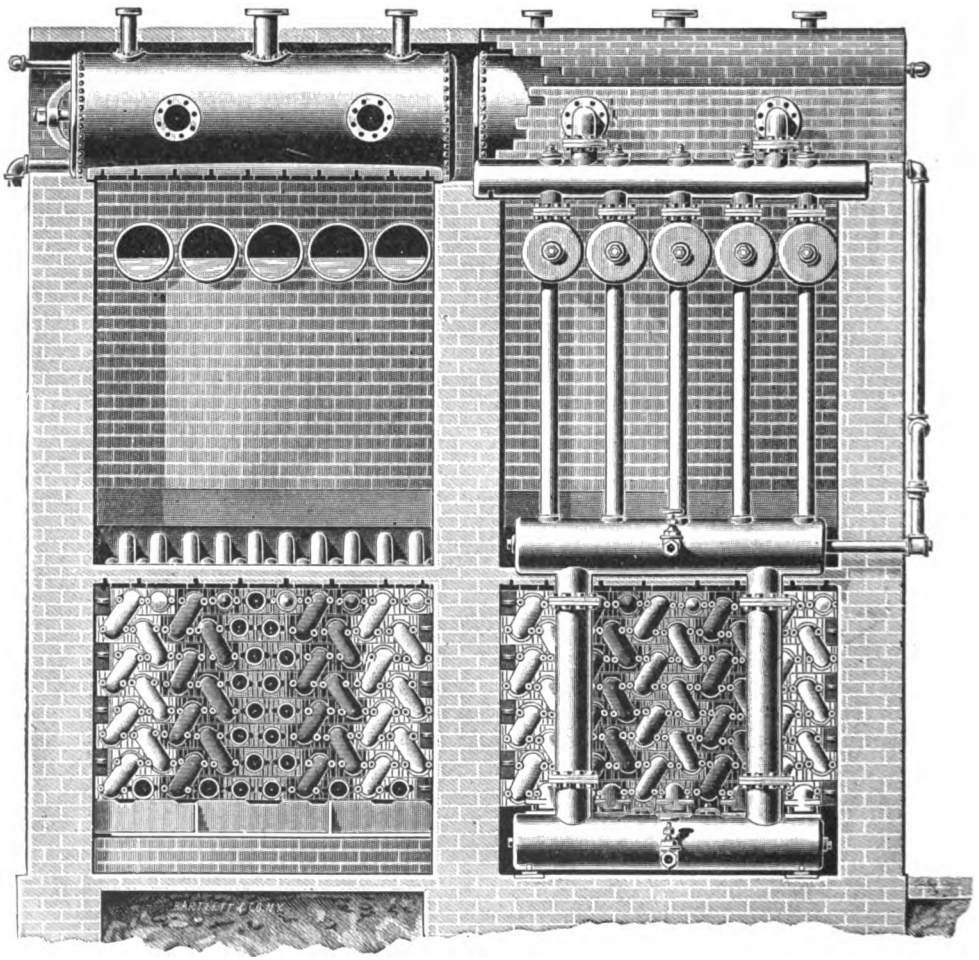

FIG. 394.

tube, reaching nearly to the bottom of the outer closed tube, and held in place by fins or lugs. The diameter of this inner tube is so chosen as to leave an annular space all around between the two tubes, which is to be the channel for ascend-

ing currents of steam-gas and hot water, while the central passage within the inner tube shall carry the descending current of solid cooler water from above the outlet of the outer tube

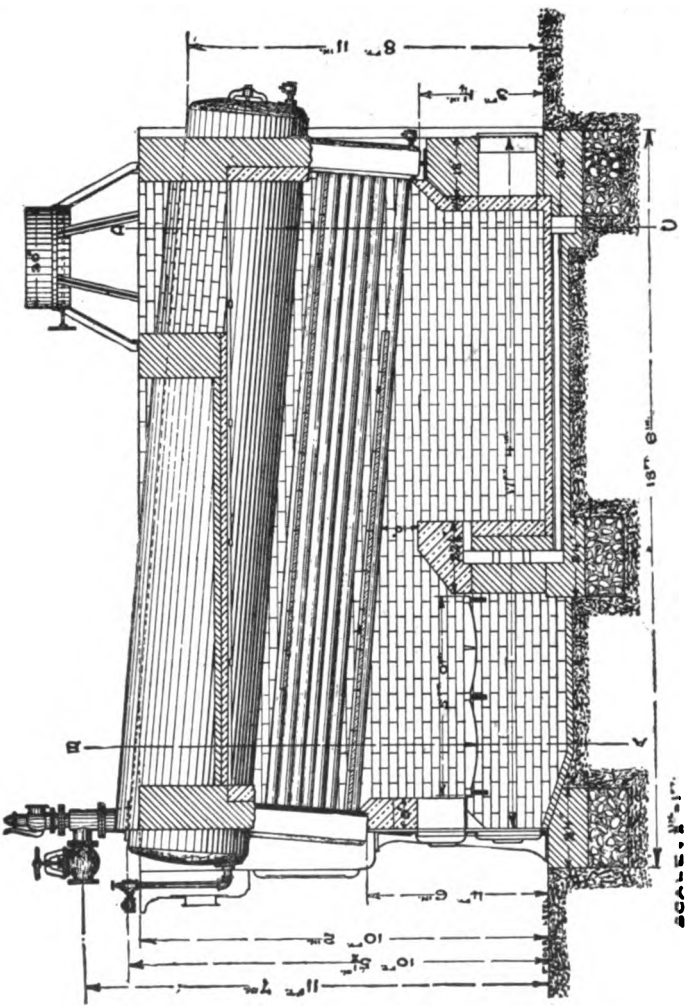

FIG. 391.

into the drum. It is expected also that the circulation and descent of the water in the inner tube shall be so rapid and vigorous as to wash out any sediment or scale from the bottom

of the outer tube where its presence would result in a burning of the tube. The circulation is active while the boiler is steaming, but it is not so when no steam is being withdrawn, and the circulation is that due to convection only. Under these conditions such tubes are apt to fill and solidify when least desired. Figs. 398 and 399 show the usual Field tube. It has been a favorite in fire-engine practice, and has also been used in tug-boat boilers.

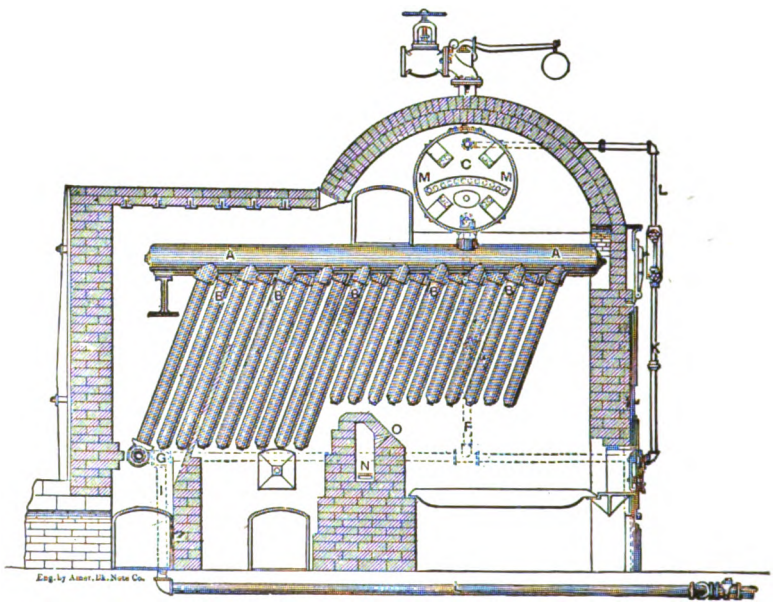

FIG. 397.

Belonging also to the closed-tube class is a type with horizontal units projecting radially from a central vertical shell. The difficulties here are the cleansing of the inside of the units, and the indeterminate character of the circulation. It has been called the "porcupine boiler."

248 Bent- or Curved-tube Types.—To avoid the indeterminate circulation of the closed radial tube, it has been made an open tube by bending it back upon itself in an easy sweep, to enter the vertical water-drum at a different level. The

difference of level of the two ends is to maintain a determinate circulation while steaming, the bubbles rising and escaping at

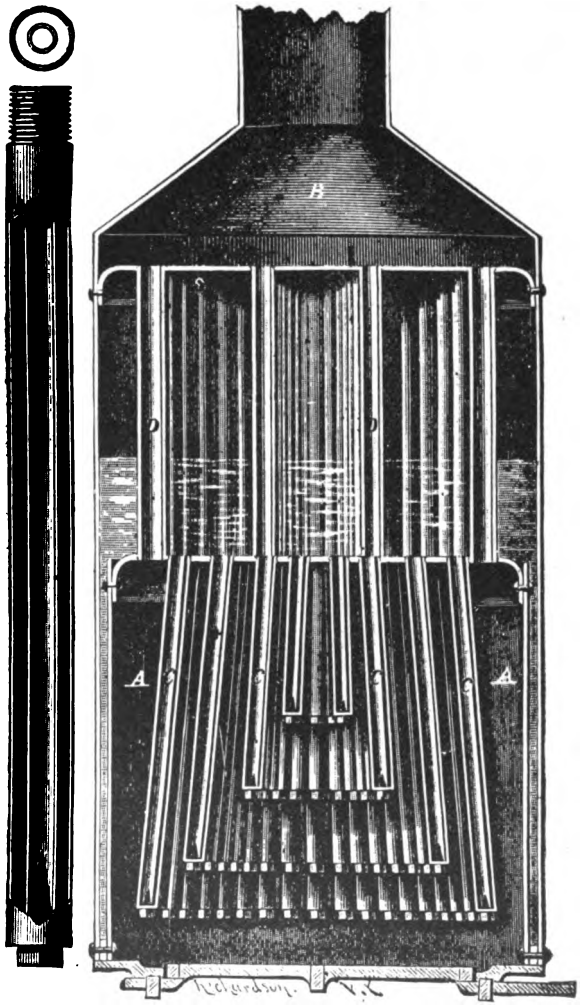

FIG. 398.

the upper end while water enters the lower end to supply their place. The tubes cannot be readily cleansed nor inspected by eye except for a short distance.

This type of boiler leads to the class of water-tube boilers made up of bent tubes entirely, which will be discussed in a following chapter (pars. 261 to 263). Coil-boilers will be also there treated.

249. Sundry Types of Externally-fired Boilers.—It is impossible within intelligent limits to present and treat all forms of boiler which have been proposed for special conditions or to meet the whim of particular designers or inventors. Such would be the types where sectional units of tubes have been placed in the gas-currents of an ordinary tubular boiler (Stead's), or at the sides of the fire-box and in the bridge-wall (Smith's); or the scheme of mechanical disengagement of steam by mounting the boiler on trunnions in its longitudinal axis, so that it might be slowly revolved over the fire (Pierce's); or the spray-boiler principle (Dunbar's), and many others no longer in use, or of questionable value or none when used. These belong rather to the specialist or expert field than to that of the practitioner, and when odd but successful types do come in that latter field they will usually prove to be combinations or new arrangements of standard types if they have desirable features in their design.

CHAPTER XXII.

TYPES OF BOILERS. INTERNALLY-FIRED SHELL BOILERS.

250. Internally-fired Boilers. General.—The internally-fired boiler differs from the externally-fired boiler (par. 225) in that the fire in which the heat-energy is liberated is enclosed in a fire-box or furnace which forms part of the structure of the boiler and is surrounded on all sides (the bottom alone sometimes excepted) by the water to which that heat is to be transferred.

The features of this principle are:

(1) Economy. No heat is lost by radiation from brickwork external to the boiler and heated by the heat of the fire. The water to be evaporated intercepts all radiation.

(2) The part of the boiler exposed so as to radiate heat to external air is no hotter than the water and steam within it. Loss by radiation is lessened here because of the lower temperature of the radiating body. This makes fire-rooms more comfortable, especially on board ship or in contracted quarters, and is of great importance in railway practice, where the boiler must be exposed to cool out-door air.

(3) The metal surfaces surrounding the fire are most efficient evaporating surfaces. This makes such boilers compact with a given evaporative capacity, so that great evaporation is secured in a small space. This is of moment in locomotive and marine practice. Such boilers as are to be portable reap advantage from this.

(4) The furnace being internal, the boiler requires either no setting or one of the simplest description. In wooden hulls the internal fire was a matter of great advantage in the matter of safety from fire, and the absence of a brick setting

removes the difficulty from weight. The absence of setting makes such boilers portable, and fits them to be used where this is convenient.

(5) They make steam quickly, so as to have pressure soon after starting the fires.

(6) No cool air infiltrates through cracks or porous places in the brickwork to dilute the gases and lower their temperature. Such infiltration may make a difference of ten per cent in efficiency in favor of internally-fired boilers which are self-contained.

The objections to the internally-fired type are:

(7) The internal fire-box exposed to a pressure tending to collapse it inward makes a costly type of boiler. This is offset in a comparison of types by the saving from the absence of setting.

(8) The efficiency of the heating-surface keeps down the temperature of the gases, and thus prevents their complete combustion and causes smoky products of combustion. This is a real difficulty with coals containing much volatile matter, and vitiates economy of such boilers with such coals. Locomotives and marine boilers are usually the worst offenders in smoky cities. The difficulty is increased when high rates of combustion are used. Means must be used to keep the gases hot enough to burn.

(9) Rapid steaming capacity secured by large heating-surface, coupled with a small volume of water in the boiler at one time, makes a type in which pressure will rise rapidly from the safe working pressure to a pressure so much higher as to endanger the resistance of the shell to rupture. This makes such boilers dangerous in proportion to their liability to this trouble.

(10) Many types introduce places in their structure which are hard to clean and inspect.

(11) Circulation is not always perfect or satisfactory, and one part may have water in it which is much cooler than the average or normal temperature. This gives rise to unequal contractions and tends to develop leaks. Or the steam may

not be carried away from the heating-surface by the circulation, but may remain and keep water from touching and cooling the heating-surface, so that it becomes overheated. These do not attach to the same types, nor is either difficulty common to all types. The special features of any type will appear in their proper places.

251. The Cornish and Lancashire Boiler.—The Cornish boiler is a single-flue boiler, with the fire-box or furnace at one end of it (Fig. 399). The flue is therefore of large

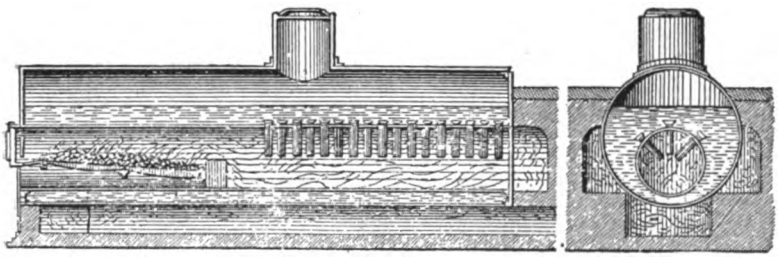

FIG. 399.

diameter (probably six tenths of that of the shell), and has to be stiffened against deformation and consequent collapse by the methods suggested in par. 232. The furnace is formed by inserting grate-bars supported on bearers across the flue, and its back is made by a brick bridge-wall. The gases pass backward through the flue to a back connection, whence they come forward either along the sides or under the bottom if the chimney-duct is at the front; but if the chimney is at the back, the gases come to the front in side flues and return under the bottom. Such a boiler requires to be set in brick (Fig. 402).

The objection to the Cornish boiler is the large and weak flue. This early caused the development of the Lancashire boiler, which is sometimes called the double Cornish boiler. Two flues with internal fires replace the single flue of the Cornish. Each will be of smaller diameter and hence stronger, and the existence of two fires permits cleaning of fires and coaling to be done alternately in each, with advantage to the

steadiness of pressure. Fig. 400 shows a Lancashire boiler fitted with the Galloway water-tubes (par. 252).

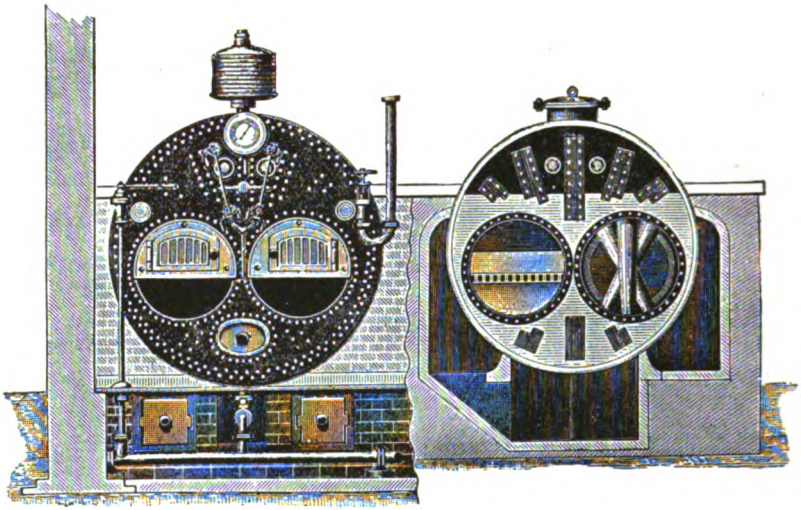

FIG. 400.

A modification of this type in which two furnace-flues join into one flue behind their bridge-walls has been called in England the "breeches" boiler. The American type of this has been seen in a form of locomotive boiler which the single flue serves as a combustion-chamber. The alternate-firing principle helps to keep up a high temperature in the combustion-chamber when one furnace is freshly fired with gaseous coal and the distilled products are ignited before getting into the fine subdivision caused by tubes (Fig. 401).

252. The Galloway Boiler.—The Cornish and Lancashire boilers are not usual in America, except in the modified form caused by introducing the Galloway tube (Figs. 400 and 402). This is a conical water-tube intended to cross the flue of either of the foregoing types, and serve both to stiffen it and to add a very efficient heating-surface of water-tube directly in the hottest current of the furnace-gases. The conical shape is given to the tube to favor circulation at uniform rate, but more especially to make it possible to pass the flange of the

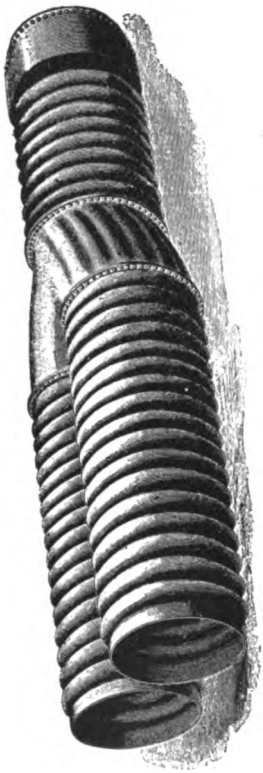

FIG. 401.

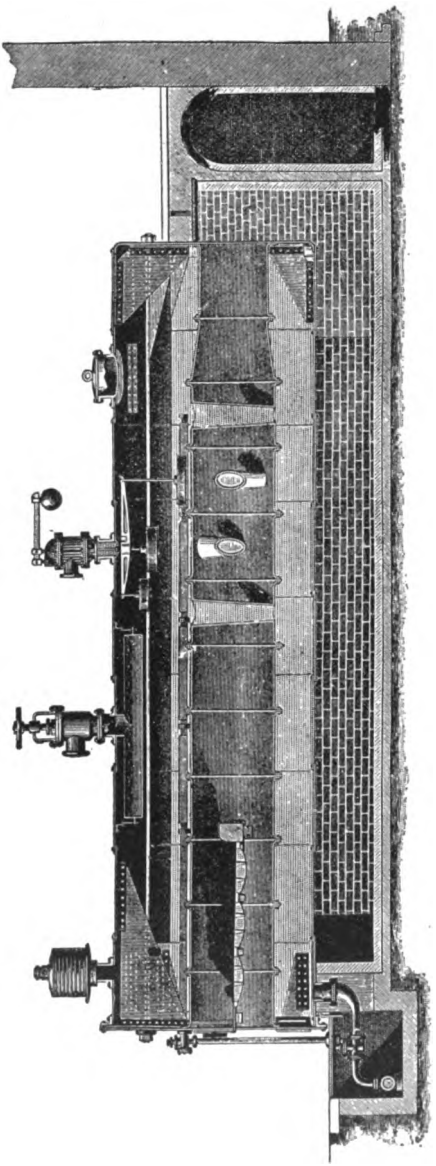

FIG. 402.

smaller end of the tube through the hole made in the flue to pass the larger end, but not its flange. By this expedient one of the inner tubes which fails can be cut out and replaced by working from without the flue and without disturbing other

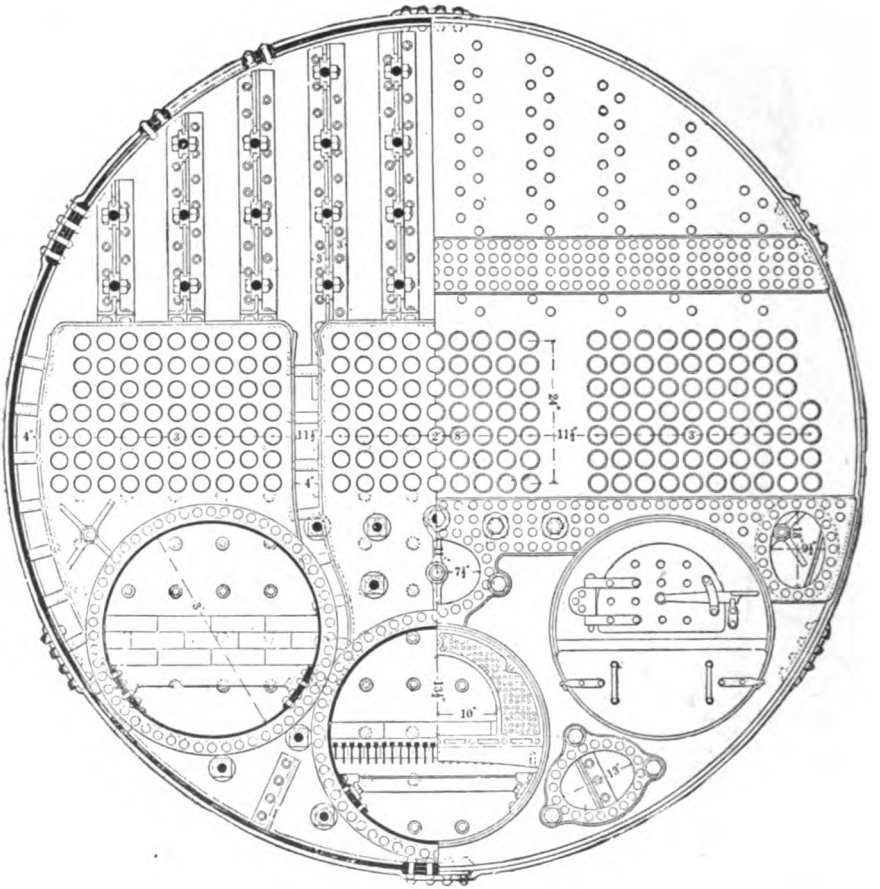

FIG. 403.

tubes nearer the ends of the flue. The tubes may be alternately vertical and horizontal, or they may all diverge from the vertical. The flanges of the tubes serve to rivet them to the flue, one inside and the other outside (Fig. 402), and where the tubes brace the flue no stiffening-rings will be required.

The flue usually has provision for flexibility in case of unequal expansion of shell and flue (par. 232).

253. The Scotch or Cylindrical Marine Boiler.—The cylindrical furnace arrangement of the internally-fired flue-boilers leads naturally to that form of boiler which is so generally used in the merchant marine. The large cylindrical shell will envelop or contain two or three internal flue-furnaces, arranged as shown in Fig. 403 (see also Fig. 404). These furnace-flues being short are usually corrugated in

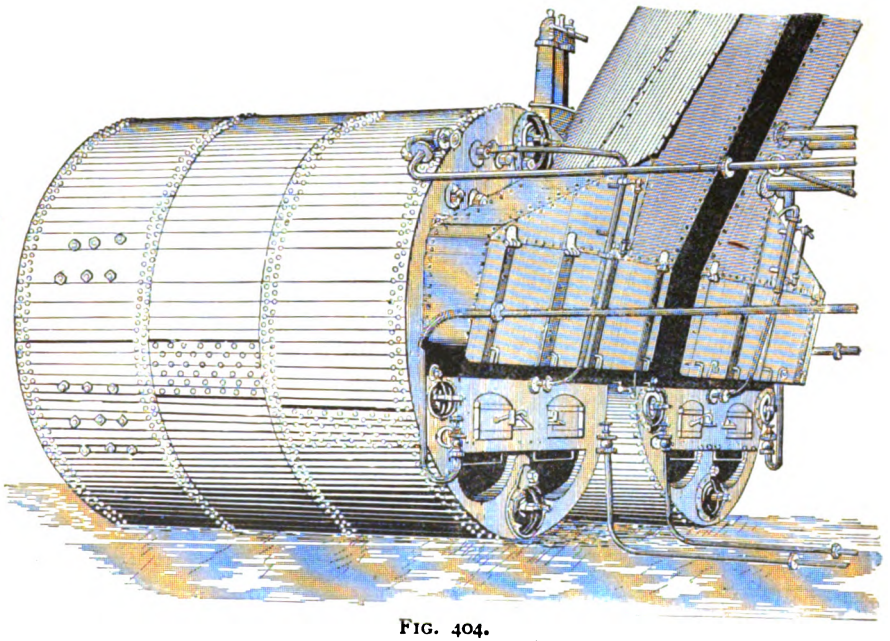

FIG. 404.

modern practice to give them stiffness against collapse without stiffening-rings. The flue is first welded lengthwise, and then corrugated 1½ inches deep and with 6 inches between corrugations (Fig. 405). The end is flanged or straight to attach it to the front or rear sheets. Corrugation increases enormously the resistance to deformation by pressure, and its only drawback is the difficulty in keeping it cleansed outside and in.

At the rear of the furnace-flue the gases rise in a "back

connection" to the plane of the tubes, still surrounded by water, whereby the heat of the gases is more completely withdrawn; and from these tubes the gases and smoke pass into smoke-boxes and thus to the chimney-stack. Sometimes such boilers are made double-ended, either like Fig. 406, or with the back connection partly in common. The flat surfaces of the back connection require careful staying as well as the large areas of the heads. The shells are butt-jointed and double- or manifold-riveted, by reason of the strength required with large diameters (par. 207). Such boilers usually have through-stays and stay-tubes as well.

The Scotch boiler needs no setting and is self-contained. The objection to it is the tendency of the water below the furnace-flues to cool down and remain without circulation, thus preventing the shell from getting uniformly warm. This

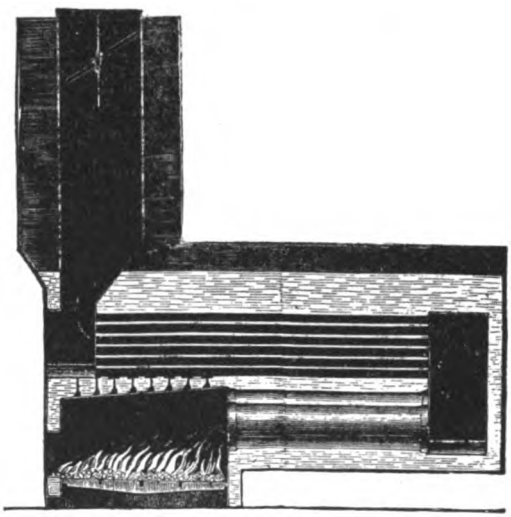

FIG. 384.

is prevented in part by causing this lower water to circulate mechanically by means of connecting the suction of the feed-pump to the lower part of the boiler, while its delivery or forcing connection is toward the surface of the water in it. Other devices are also used for the same purpose.

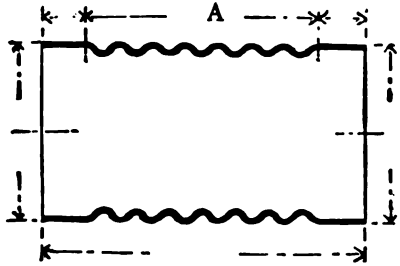

TYPE A.
FIG. 405.

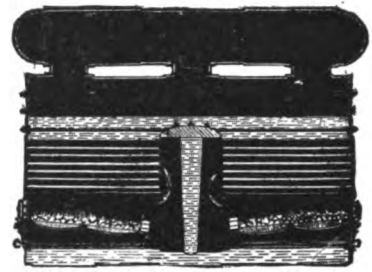

FIG. 406.

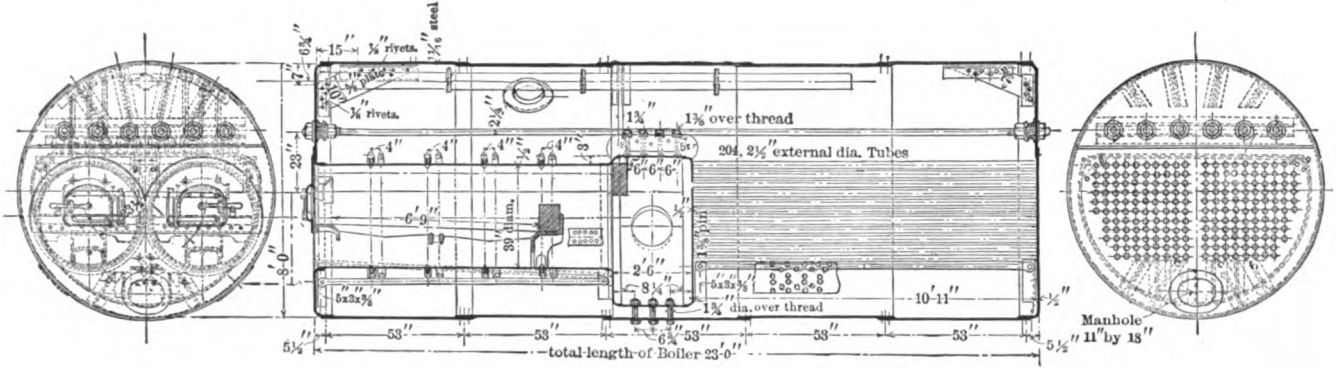

FIG. 407.

The typical Scotch marine boiler is intended to be laid athwartship and to get a length of course for the gases by a return arrangement of tubes. This makes a large diameter necessary. For high pressure, and where the boiler can be laid lengthwise, the form of Fig. 407 gives the necessary length for the gases to give up their heat, and keeps the diameter down.

254. The Rectangular Marine Boiler. Martin Boiler. —With the lower pressures used in the simple condensing

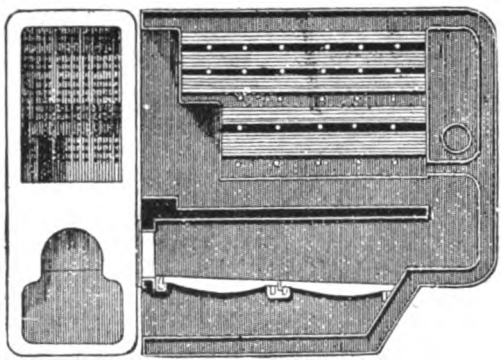

FIG. 408.

engine rectangular fire-boxes or furnaces have been much used, and often the shell has been made with flat or arched

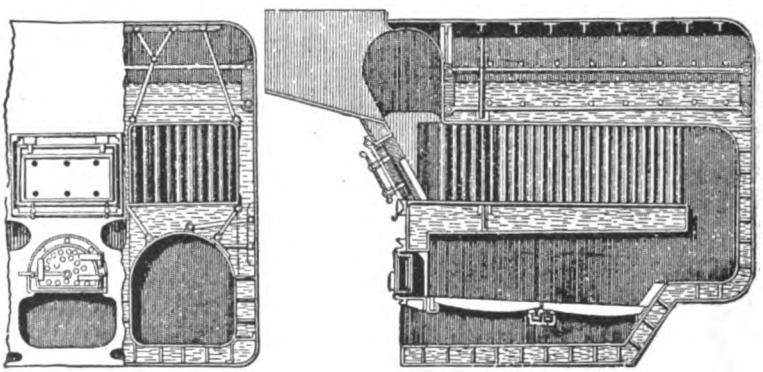

FIG. 409.

surfaces so as to fit the lines of the vessel to a degree. The gases may be led from the furnace by flue or tubes to the

back connection and then returned by flues or tubes to the front (Figs. 384 and 408). Sometimes the gases were returned

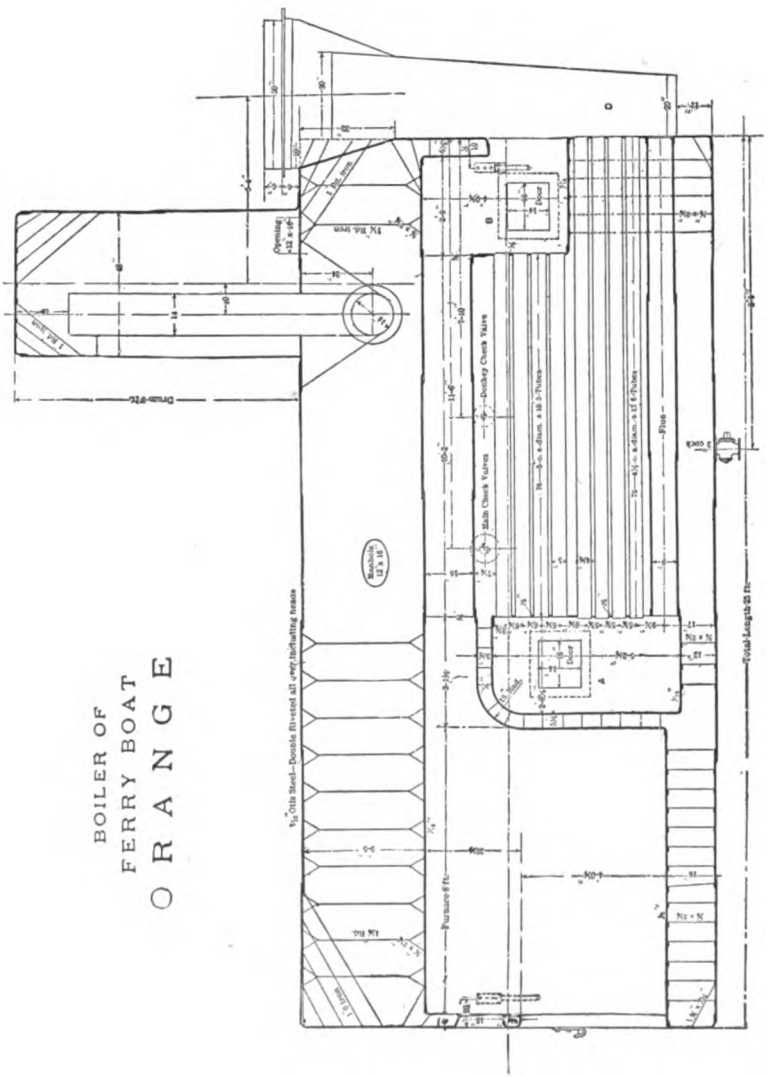

FIG. 410.

on a lower level (drop-return-tubular or flue boilers), and many combinations have been made of the tube and flue prin-

ciple. These boilers are sometimes called Martin boilers, although properly the Martin boiler had the return of the gases around nests of vertical water-tubes, crossing a rectangular return-flue. Such boilers had the trouble from inaccessible central water-tubes in its worst form (Fig. 409). Flat-sided marine boilers are still to be seen for simple condensing engines in lake and river practice, but even here the furnaces are usually cylindrical and either corrugated or stiffened with rings (Fig. 410). Oil or grease settling from the water upon these furnace-crowns and causing them to soften and come down from overheating is a very frequent source of annoyance and danger in boilers of this class, and is aggravated by unwise handling of the engines.

The conditions attending the use of the marine boiler in sea-going vessels call for a type of highest efficiency and best economy with least bulk and weight. The vessel must carry its own coal, and have to spare for any delay in reaching its next coaling station. Hence boilers of this class stand very high as types. Domes for such boilers are inconvenient, and for large diameters will either be dispensed with as not required where a large steam space is furnished by the large diameter, or a dry-pipe will be used. For smooth-water boats the steam-chimney is still much used (par. 227 and Fig. 384).

255. **The Typical Locomotive Boiler.**—The conditions imposed by the distance between the tracks of a railway line compel the boiler which furnishes steam to the locomotive engine to be of relatively small diameter, and hence of enormous heating-surface compared to the weight of water which it contains. The grate-area has been limited in early designs by the same conditions. Hence the rectangular fire-box has prevailed, and there has been no return-tube construction, but the tubes leave the front side of the fire-box. To get as wide a grate as possible between the driving-wheels, the water-legs were made narrow and parallel to the fire-box sheets, the two being stayed together by stay-bolts. The crown-sheet, of the same area as the grate, required to be very firmly stayed against collapse (par. 220 and Fig. 430) and steam-space

secured by enlarging the diameter over the fire-box, so that the name of "wagon-top" boiler attached itself to this back part because of its resemblance to the canvas cover on hoops of the early plains wagons (Fig. 411). The fire-door is

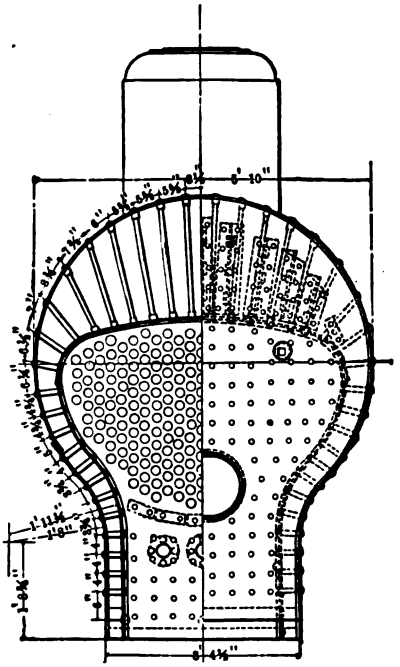

FIG. 411.

formed in the back water-leg either by flanging the outer and inner sheets over each other and riveting them together, or else by means of a forged iron ring, whose width is that of the water-leg between plates, so that the two plates are riveted together with the ring between them. The inside dimension of the ring forms the size of the door. The bottom of the water-legs is either made of a similar ring—here called the "mud-ring"—or the inner plate is bent by a gentle reversed curve so as to come parallel to the outer plate and close to it, permitting the two to be riveted near the edge. Hand-holes give access to these water-legs, and a manhole must permit inspection of the crown-sheet. The

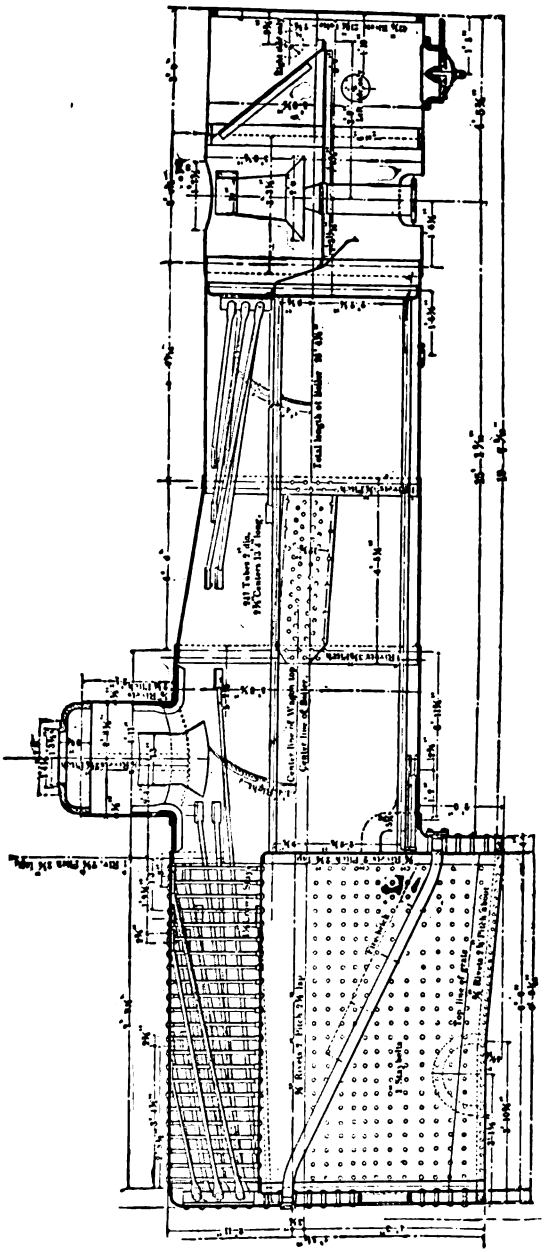

FIG. 412.

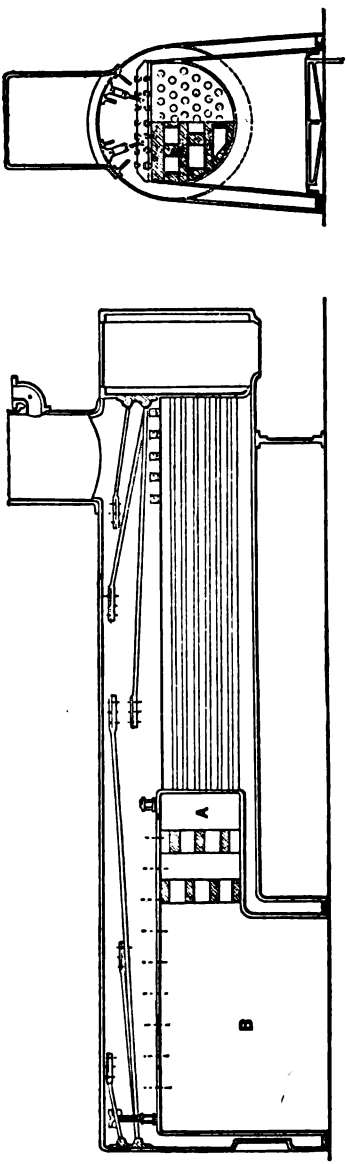

FIG. 413.

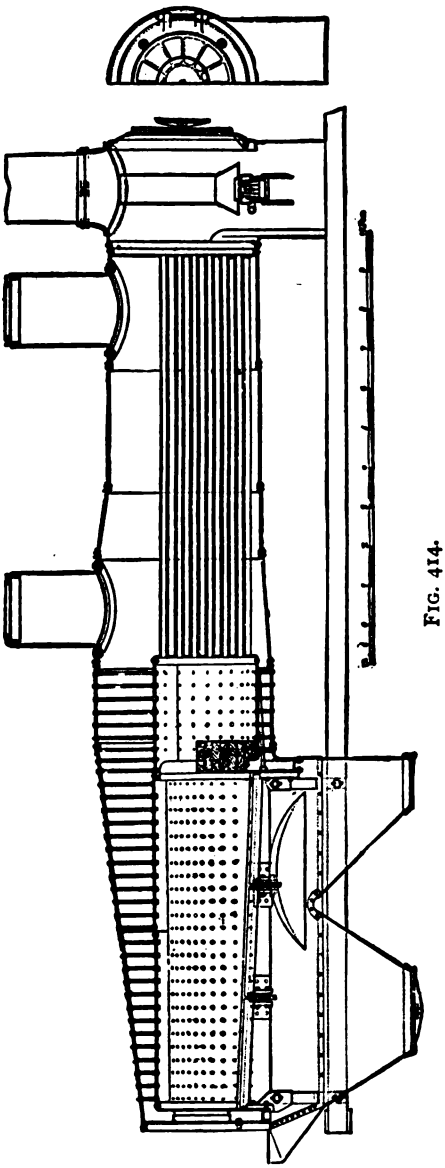

FIG. 414.

tubes deliver the products of combustion into a smoke-box at the end farthest from the fire, from which the stack causes them to escape. On road engines the "extension-front" smoke-box gives facilities for catching and holding cinders. These are fitted below the outlet of the exhaust-pipes from the cylinders, so that no back pressure is created by sending the steam through spark-arresting appliances in the form of gauze or perforated sheets or both (Fig. 412).

256. Modifications of the Locomotive Boiler.—The very excellence of the locomotive boiler for rapid and copious

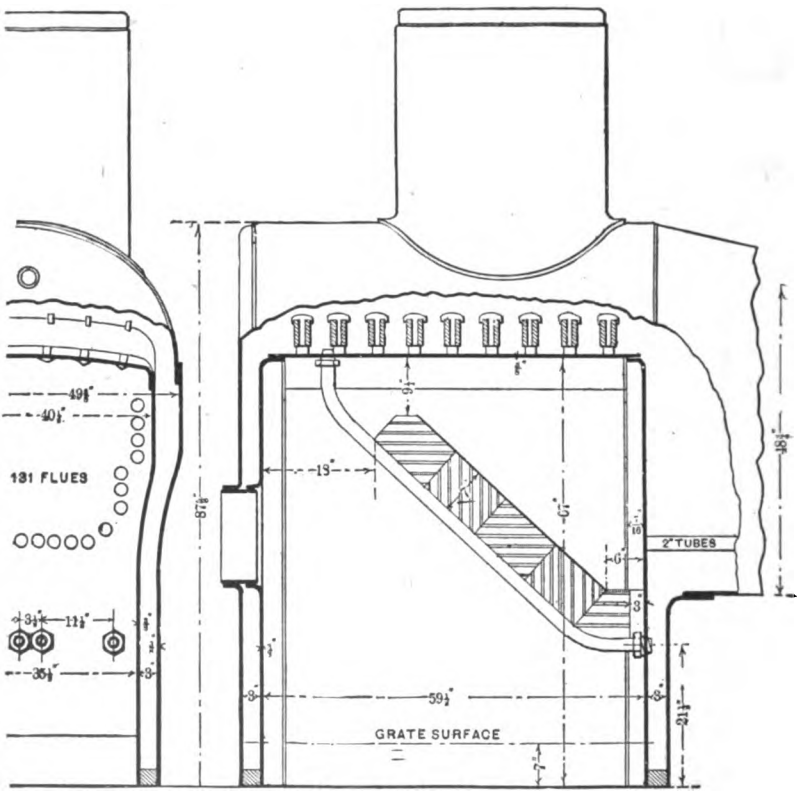

FIG. 430.

steaming, its large heating-surface and strong draught when at work, are unfavorable to its economy and smokelessness.

Flaming gases are instantly put out on entering the tubes, and carbon is wasted and the unburned carbon in the gas appears as smoke. Combustion-chambers are therefore desirable, to give time and room for proper combustion, and they should keep the gases at high temperature, as well as admit of access of oxygen. Such combustion-chambers are secured by fire-brick arches across the ordinary fire-box, or by making special designs to secure them (Figs. 413, 414, and 430). The brick checkerwork is possible in stationary boilers, and becomes incandescent, so as to act both on the gases and by radiation upon the metal of the chamber.

It is desirable, furthermore, while burning a given amount of coal, to lower the rate of combustion per square foot of grate-area. This can only be done by enlarging the area of the grate, lifting the boiler so as to be above the limit imposed

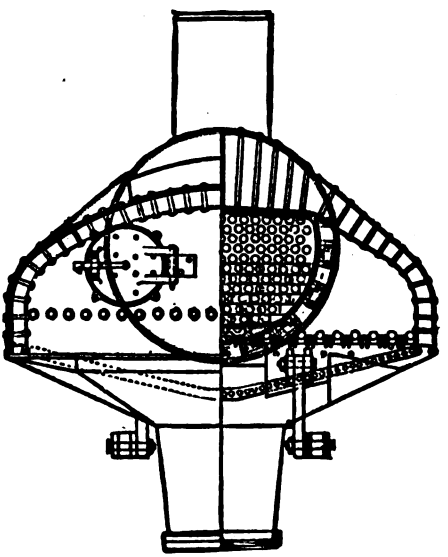

FIG. 415.

by the frames and by the driving-wheels at the fire-box end, and displacing the cab forward so that the fire-box shall be behind it (Figs. 414 and 415). Such wide fire-box will be fed through two doors, but its length will be fixed by the limit at

which coal can be conveniently thrown (usually eight feet, possibly ten). Fig. 413 shows also a wide-grate design. Further modifications of the standard fire-box end have been hitherto presented (par. 220 and Figs. 331 and 432). Figs.

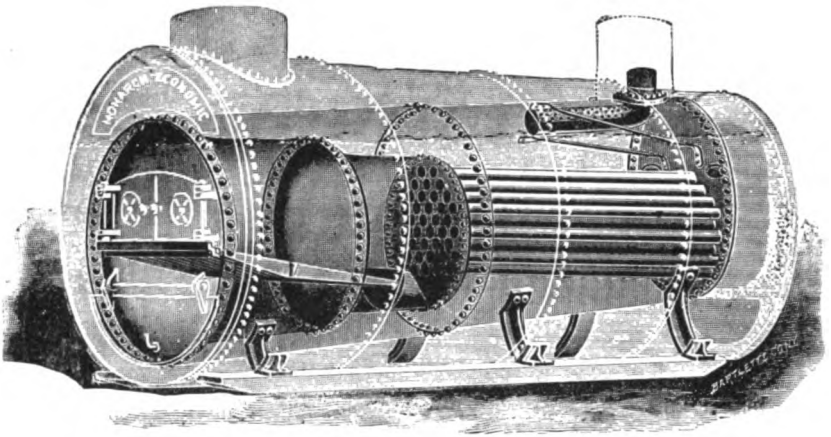

THE MONARCH ECONOMIC BOILER.

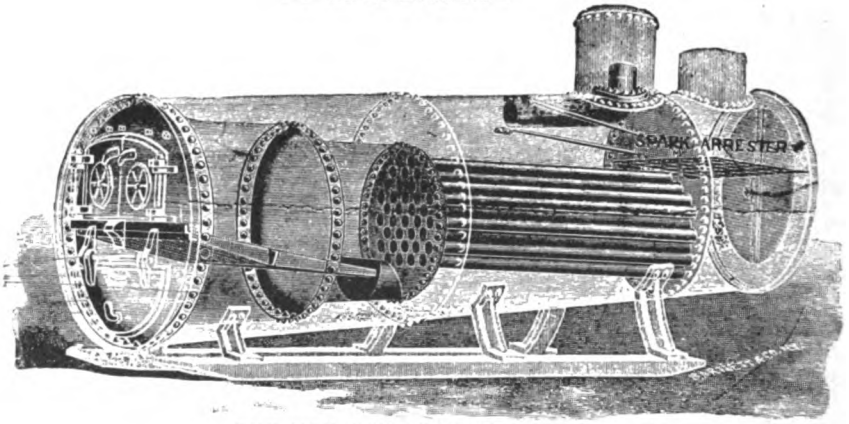

THE MONARCH PORTABLE BOILER.

FIG. 416.

416 and 417 show types which have been approved for stationary practice and which favor economy while adhering quite closely to the locomotive class of boilers.

Locomotive boilers have the advantages and disadvantages

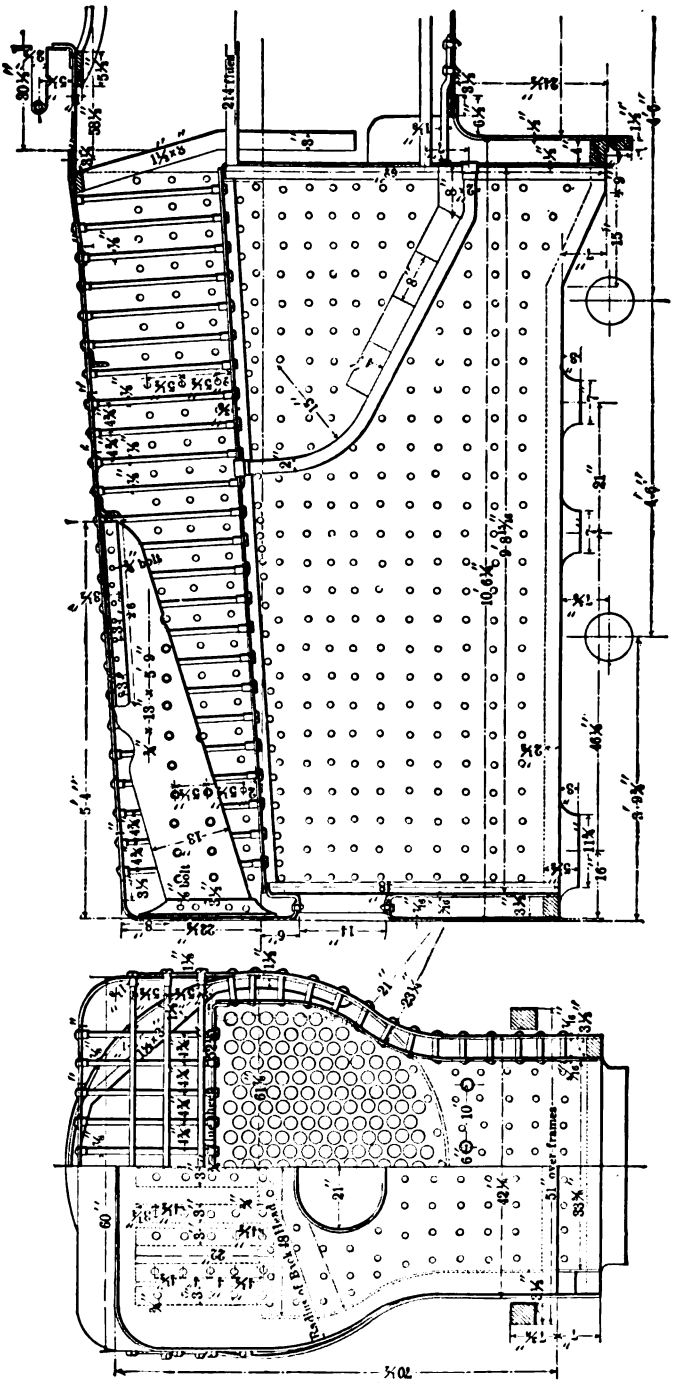

FIG 432

of their class to a marked degree (par. 250). Besides their railroad use, they are used in high-speed torpedo-boats and over a wide field in stationary practice.

257. The Upright Boiler.—The locomotive-boiler type becomes the upright type when the tubes are taken from the side of the fire-box and placed vertically in what was the crown-sheet of the horizontal boiler. Fig. 416 is a transition

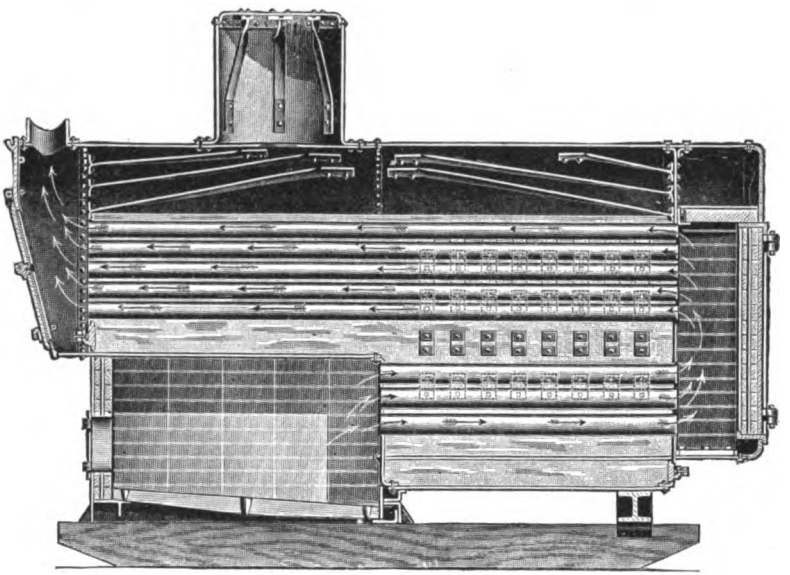

FIG. 417.

type, and could almost be used in either position. The complicated staying of the crown-sheet disappears (Figs. 412 and 430), and the fire-box and water-legs may conveniently now be made cylindrical, and the barrel part become of the same size as the fire-box part, or nearly so. Fig. 418 shows such a typical upright boiler, and Fig. 419 a modification of it. The fire-box is stay-bolted against deformation and collapse inward, and the water-leg is closed at the bottom with a mud-ring. Hand-holes give access to small places which cannot be visited. The tubes stay the opposite surfaces.

The features of the upright boiler are:

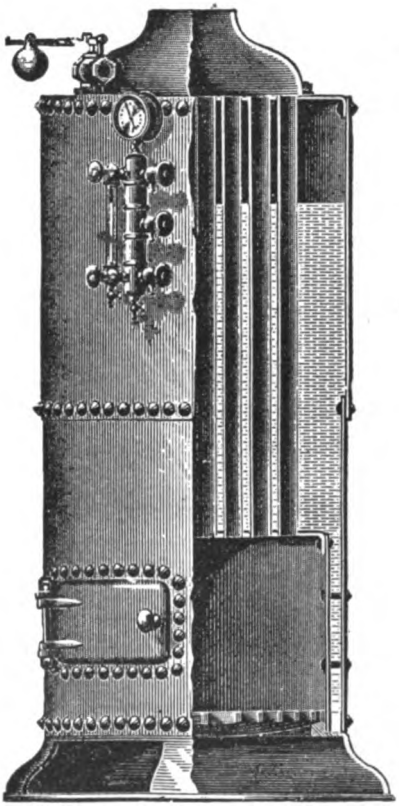

FIG. 418.

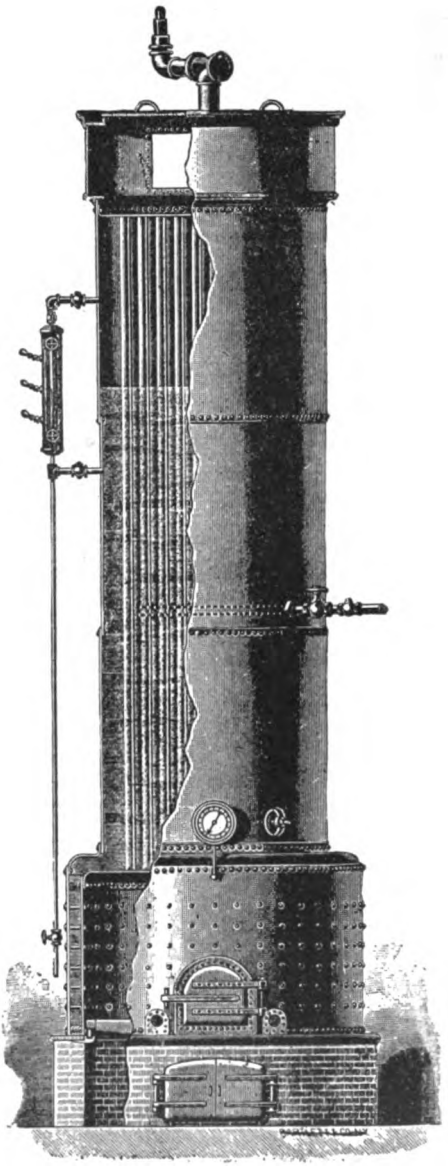

FIG. 419.

(1) It is light and portable.

(2) It requires no setting.

(3) It is a rapid steamer, because vertical tube-surfaces evaporate rapidly and the water is subdivided.

(4) It takes little floor-space.

(5) The upward motion of the hot gases is the natural flow of such gases.

(6) The simplicity of the stays makes it a cheap boiler.

On the other hand it may be urged:

(7) The circulation is not determinate, and may be defective. Everything tends to ascend all over, and if water does not replace the steam made at the tube-sheet, the latter will overheat. This is remedied in part by thinning out the tubes, so as to leave open spaces for water to move through, and by the use of baffle-plates or brattices to force a determinate circulation.

(8) It is troublesome to get a dome or a large steam-space. Wet steam will result if the flow is rapid.

(9) The upper ends of the tubes are not water-cooled in such a design as Fig. 418, but will grow very hot and expand so as to cause leaks at the upper tube-sheet. While such hot tubes may serve to dry the steam somewhat, the difficulty from unequal expansion is of sufficient moment to justify the design of Fig. 420, where the smoke-box is drawn down into the boiler proper to submerge or drown the ends of the tube below the water-line.

(10) The boiler cannot be entered for a personal inspection, and cleansing is not easy when it has to be done from outside. This is a very serious objection with many waters.

(11) It holds the least amount of water of any of the shell types, which makes it pass quickly from safe pressure to one which would endanger it. This danger is greater the smaller the boiler.

258. Modifications of the Upright Boiler.—To secure the convenience of the upright arrangement and at the same time avoid some of its defects, various special designs have been advanced. Fig. 421 shows the Corliss boiler, with a steam-

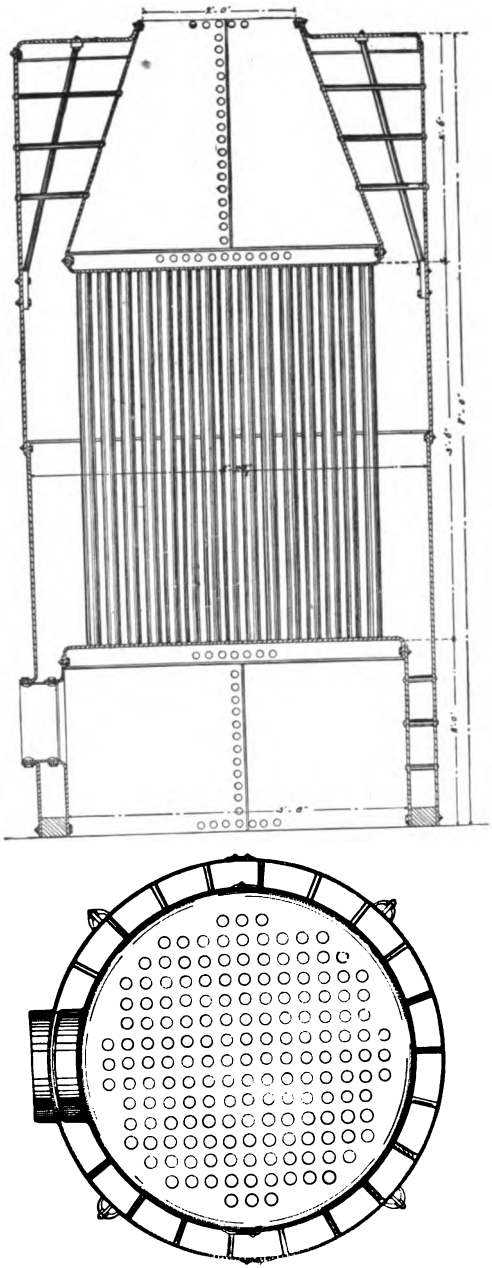

FIG. 420.

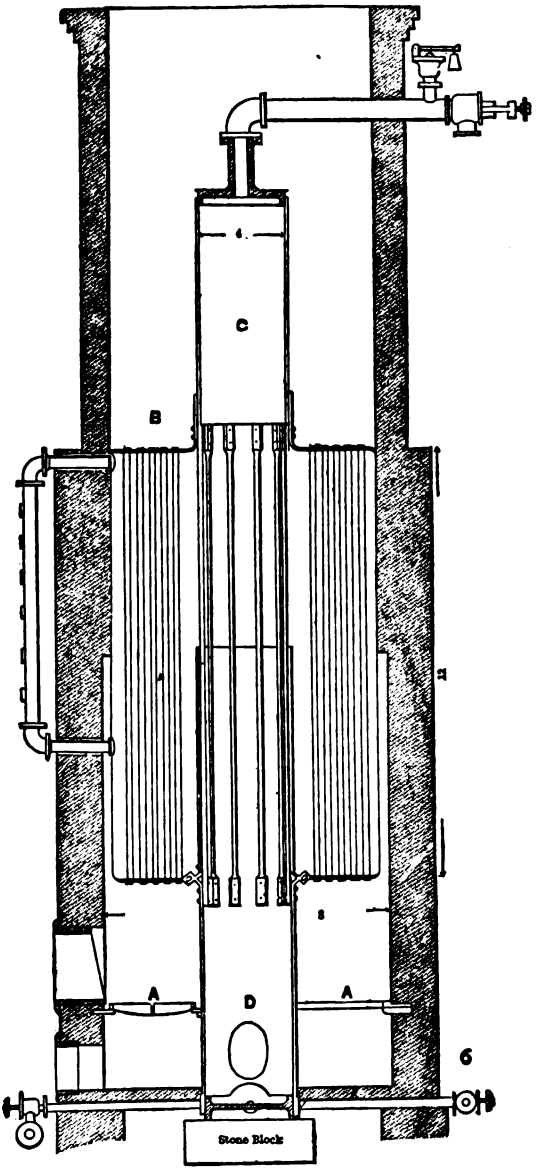

FIG. 421.

drum C arranged as a superheating surface, a mud-drum D to catch sediment, and an annular grate A, supplying the hot gases to the vertical tubes. The Reynolds boiler groups the tubes in such fashion that through a manhole full access is given between the rows to every part of the crown-sheet (Fig. 422).

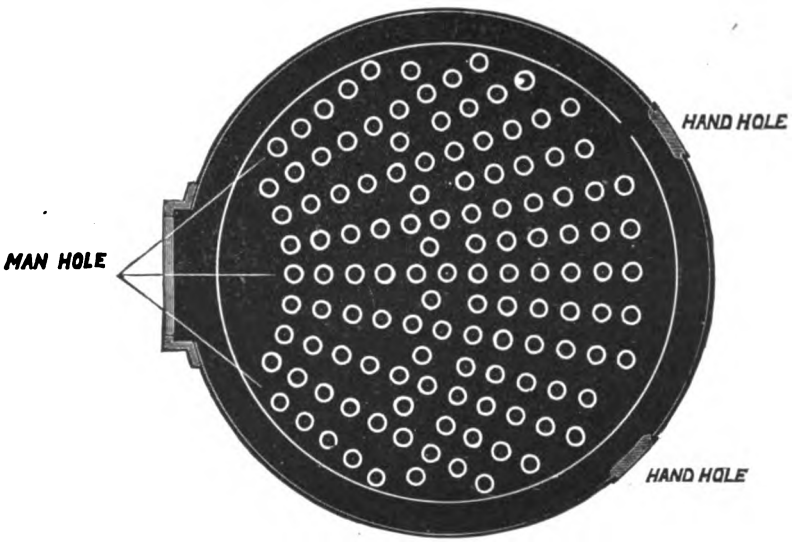

FIG. 422

259. The Fire-engine Boiler. — The steam fire-engine boiler is a modification of the submerged-tube type of the upright, with the addition in the fire-box of extra heating-surface either in the form of Field tubes (par. 247) or of some of the curved water-tubes (Figs. 423 and 424). The fire-tubes are often of brass or copper to secure high conductivity, and they are made of small diameter, and a great many are used very close together. Such boilers must have full working pressure in two or three minutes after the fire is lighted, and this property must be secured by having very little water in the boiler at one time. This makes a dangerous boiler in proportion to its ability to steam rapidly, and one liable to wide ranges of pressure in a short time.

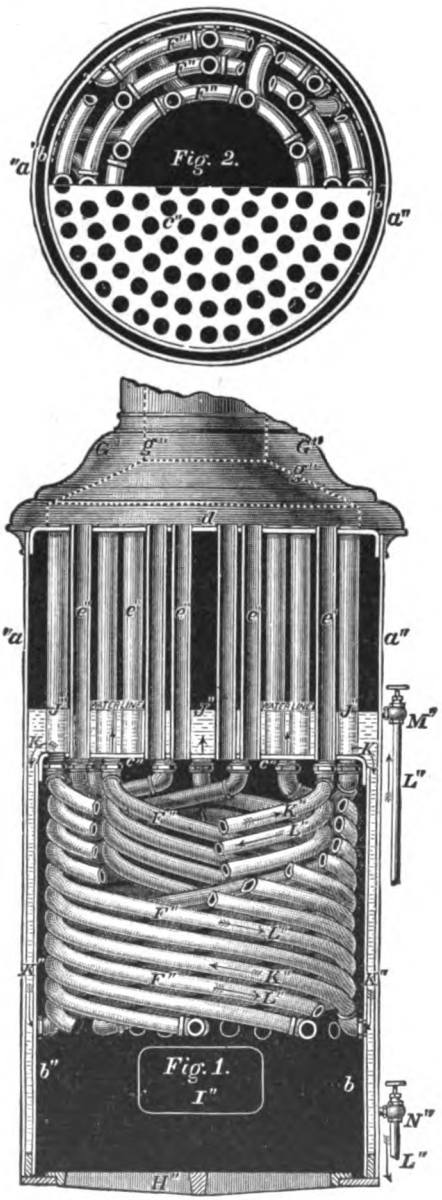

FIG. 423.

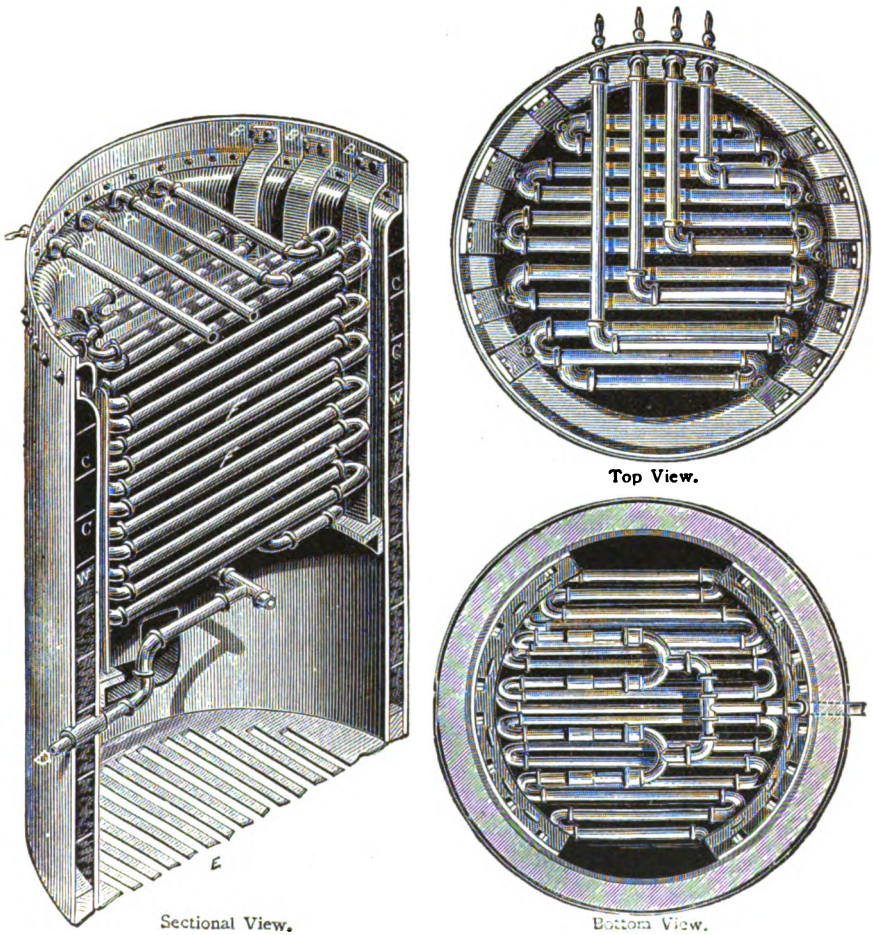

FIG. 424.

CHAPTER XXIII.

TYPES OF BOILERS. INTERNALLY-FIRED SECTIONAL BOILERS.

260. General.—In a strict sense a sectional or water-tube boiler cannot be internally fired. But the demand for high pressures and a rapid steaming capacity in a small bulk, with the safety which results from the sectional principle, has caused the appearance of several types of boilers in which the fire is so completely surrounded by the water-tubes which form the heating-surfaces that it seems most fitting to group them in the class where this condition is a feature. These boilers furthermore have no setting such as is needed for the externally-fired sectional type, but the grate-fixtures attach to the heating-surface directly, and only a non-conducting casing is required to envelop them like a smoke-box and confine any products of combustion. While some forms of straight-tube boiler will lend themselves to the design of internal furnaces of this sort, their use is not widespread as yet. Most of them are built up of curved pipes or tubes, the curvature being given in order to provide for expansion both equal and unequal, and the joints being made with fittings in smaller sizes, or by the method of expanding into special headers in the larger ones.

261. The Water-tube Boiler.—Figs. 425 and 426 illustrate the Almy boiler, a type of tube and fittings boiler which has been used with favor on high-speed yachts and torpedo- and dispatch-boats. The curvature of the water-tubes takes up expansions, and the fire is surrounded by the water to be evaporated. There is very little water in the boiler at one

time, and it is thoroughly subdivided over a great heating-surface.

Fig. 427 shows the Thornycroft boiler in two forms, and Fig. 428 the Ward, which has been a successful competitor

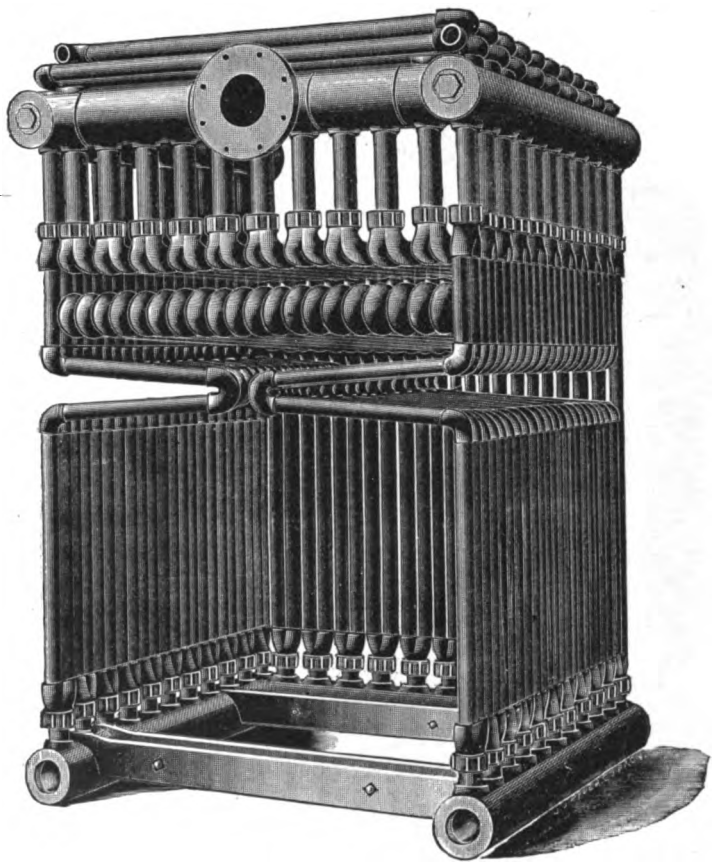

FIG. 425.

for recognition in larger marine practice. Their principles have been so well canvassed already that further discussion is not called for.

262. The Coil-boiler.—The coil-boiler differs from those above mentioned in that one or a limited number of continuous

coils is used instead of a large number of short or separate circuits. The steam formed near the bottom end of such a coil must run through its entire length before escaping at the disengaging-surface. This makes it desirable that the water in such a coil-boiler should be circulated mechanically, both

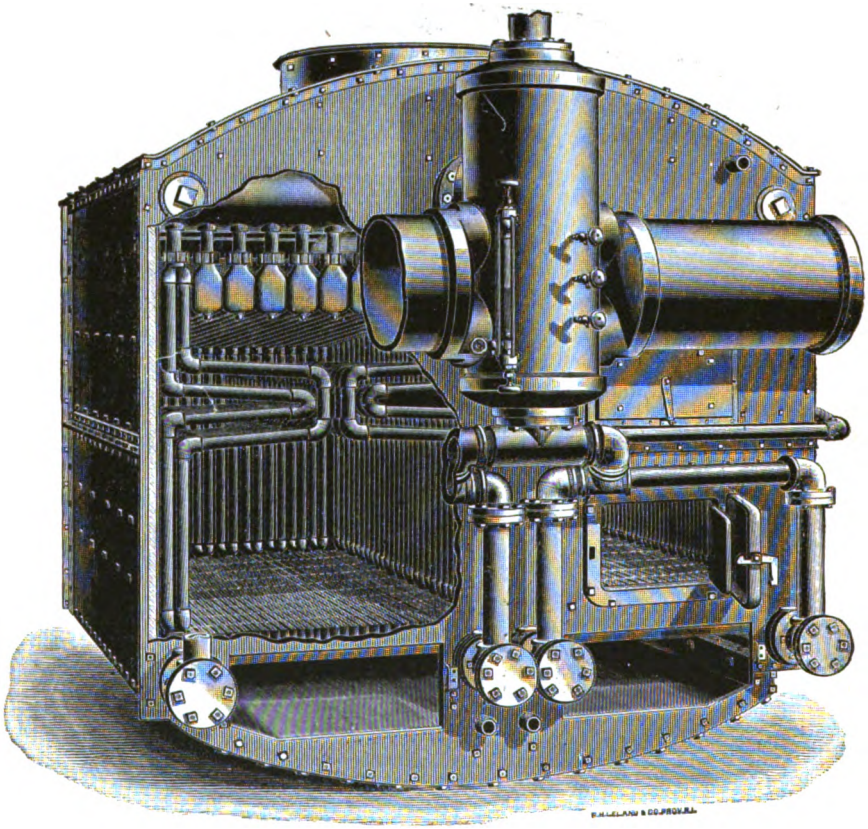

FIG. 426.

by reason of the advantage so far as efficiency of transfer is concerned, and to preserve the coil from burning. Such coil-boilers have given very large results for their size in experimental forms. The two best-known types are identified with the names of Herreshoff and Trowbridge (Fig. 429). (See also Fig. 424.)

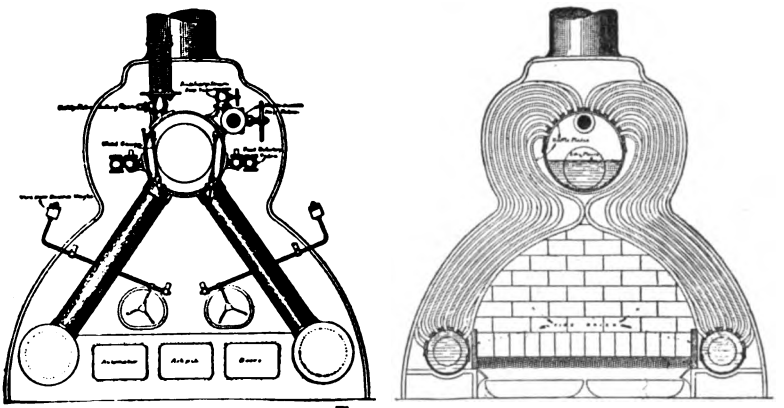

FIG. 427.

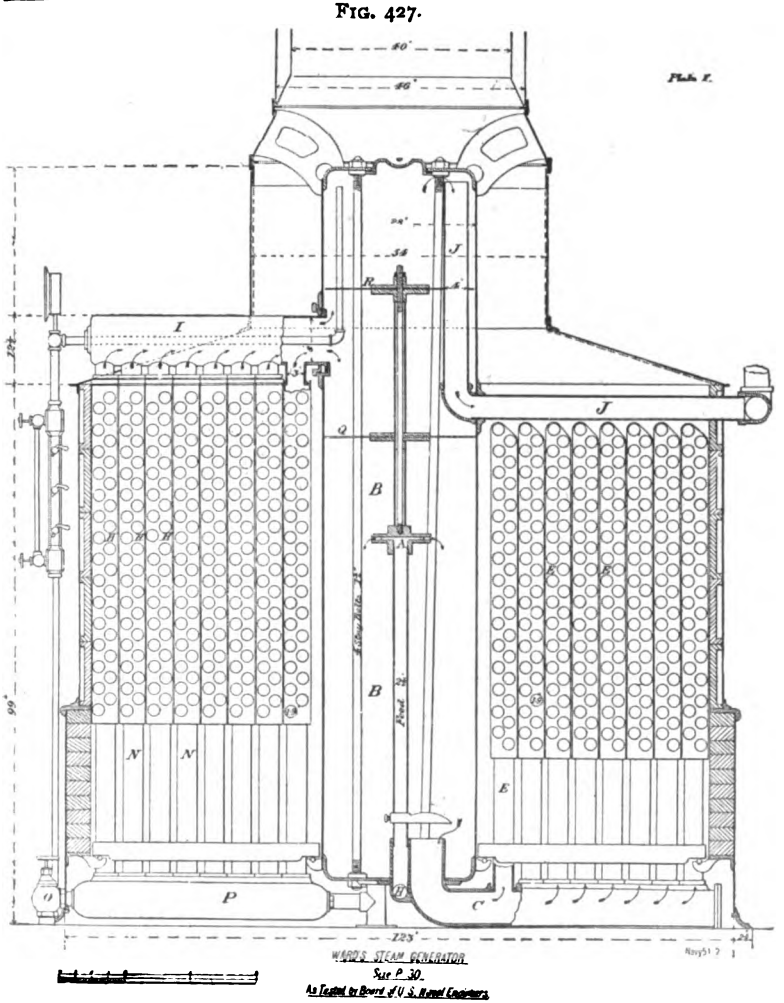

FIG. 428.

263. Sundry Types. Conclusions.—As in the case of the externally-fired boilers, there will be types of internally-fired boilers which will not go naturally into the general classes above named. Such would be combinations of accepted types made for special uses, and possibly new types. The student

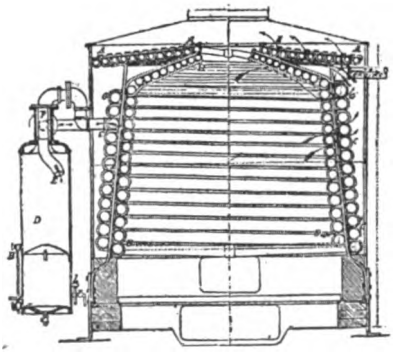

FIG. 429.

and reader must follow his own lead in the consideration of such cases.

It seems to be held in the case of the water-tube marine boilers that they present the following features:

(1) Light weight of both metal and water; about one half that of a Scotch boiler of equal steaming capacity.

(2) Adapted for high pressures.

(3) Make steam rapidly, and have the pressure soon after starting fires.

(4) Are safe against a disastrous explosion, because they hold so little water.

(5) Are not injured by the intense combustion and local heat caused when forced draught is used.

(6) The parts are not difficult to renew.

As disadvantages they offer:

(7) They require more care in feeding. The water does not always remain in the lowest part of the coil and give a normal level at the water-gauges. When used in batteries the water may not remain in one particular boiler in mass, but will fly about in it or even into other boilers.

(8) Corrosion is troublesome within the coils, and access and inspection impossible. Oil also gives trouble if allowed within the coil with the water.

(9) The coil is prone to fail where the pipes or tubes are threaded into the fittings. Overheating from absence of water on the heating-surface makes the screw-threaded ends give out by oxidation and by stretching.

(10) The casing around them gets very hot and makes the fire-room or stoke-hold hot even to the point of being unbearable.

(11) A certain greater amount of air is drawn into the fire around the casing so as to dilute the hot gases and lower their temperature. This does not occur in a true internally-fired boiler.

CHAPTER XXIV.

BOILER-SETTING.

264. General. Side Walls.—The internally-fired boilers are ready to use as soon as they are located and properly supported (the Cornish and Lancashire excepted). The externally-fired boilers and these two examples of the former class require a structure to be erected which shall support them and shall provide a proper place for the fire and some of the flues or spaces for combustion. This structure is called the boiler-setting. It must be of a refractory material to withstand heat, and of a non-conductor for heat so as to cause least losses by radiation. Its material must be easily manipulated to form flues of proper shape and character, and must be one with which it is cheap to build.

These conditions are best met by the use of brick. Those parts exposed to fierce action of heat will be of fire-brick, and the rest of the cheaper common red brick. The fire-brick may be used as an inner lining on the fire-surfaces for the more massive walls, provided proper care be taken in bonding the two grades together. The fire-brick is a little larger than the common brick, which is an occasion for trouble in uniting them. Bridge-walls and the thin parts at the front of fire-boxes will be of fire-brick altogether. Cheapness can be secured by using fire-brick only above the line of grate-bars both in the fire-box and behind it, but it is a question whether this is worth while. The fire-brick lining need not be carried very far into the chimney with anthracite fuels, since the gases should never be above 600° Fahr. after they leave a properly set tubular boiler. With some sectional boilers the gases may be hotter, and with bituminous or long-flame fuels flam-

ing may occur within the chimney, making a fire-brick lining desirable all the way to the top.

The thickness of the walls will depend in part on the methods used to support the boiler. If the setting of brick is to support the boiler and its contents, it must be at least a brick and one half thick (12 inches), and will be more usually 17 or 20 inches for outside walls. The twenty-inch wall is usually made with a four-inch air-space between two eight-inch walls. This make a non-conducting wall for the sides, and with considerable stability, because at intervals a brick is laid headerwise across the air-space to tie the sides together, and at other intervals a header-brick in each wall is laid to project across and touch the other wall without entering it (Fig. 437). The hollow wall is without meaning in walls between the boilers in a battery. Such walls will be solid, and probably twelve inches thick.

If the boiler is supported upon an iron framework independent of the brickwork as in the case of sectional boilers in the main (Fig. 385), the brickwork of the setting becomes a mere shell to retain the heat and gases, and may become an eight-inch solid wall or a twelve-inch wall with air-space.

Rear walls which form a sort of reverberating surface require to be thick and well laid, because exposed to the deteriorating effect of heat in a marked degree. It is more usual to make these solid or without air-space, and depend for coolness upon the non-conducting quality of brick.

The use of lime-mortar in boiler-settings is not to be commended. The heat tends to calcine the lime, or continually to unset or loosen the mortar bond, and the effect of hydrating the calcined lime is to injure the iron which it may touch. Fire-clay mortar is refractory and harmless, and will be used in any case with the fire-brick work.

265. Buck-stays and Tie-rods.—The heat of the fire and its gases causing expansion and deformation of the setting, to which the expansion of the boiler and its supports may add their influence, makes it necessary that the setting should be treated structurally like a heating-furnace, and tied together

by means other than the bond of the brickwork. For this purpose tie-rods will be laid lengthwise (Fig. 442) in side

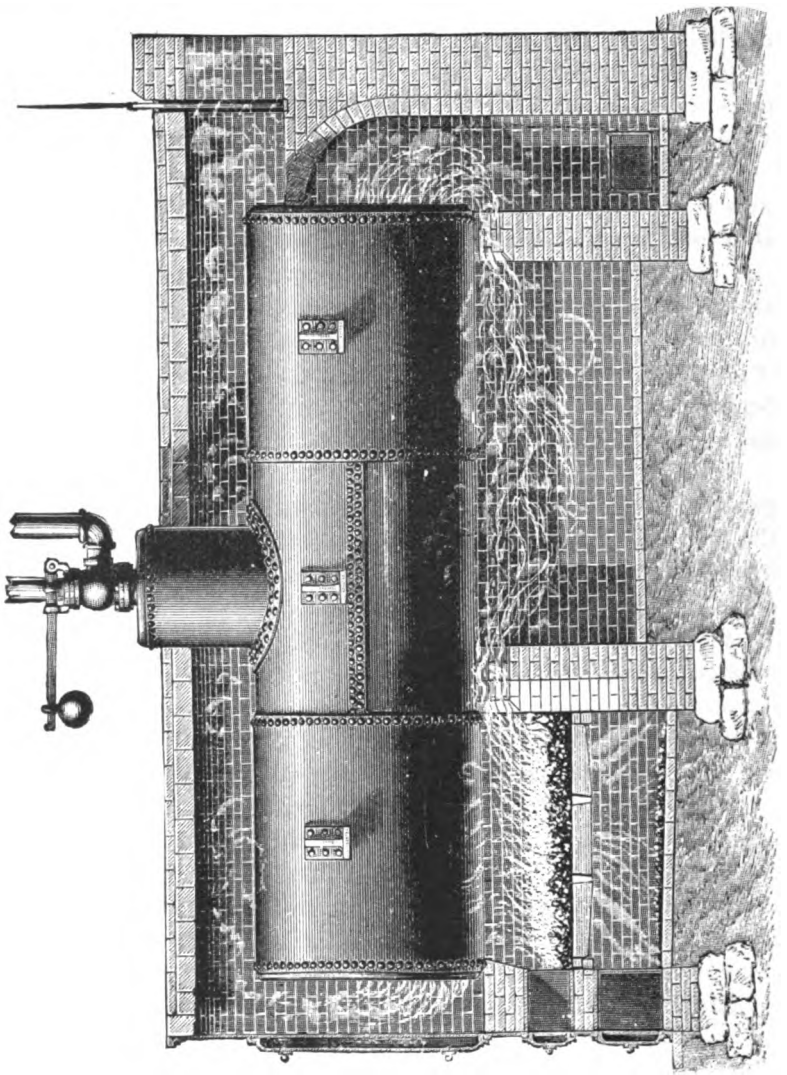

FIG. 436.

walls, and will be used also crosswise between the side walls. The lengthwise tie-rods bear at the front on the outer side of

the front castings, and at the rear either on buck-stays or large washers, against which they bear by means of a nut on the threaded ends of the rod. The side-wall ties bear on buck-stays (Fig. 437).

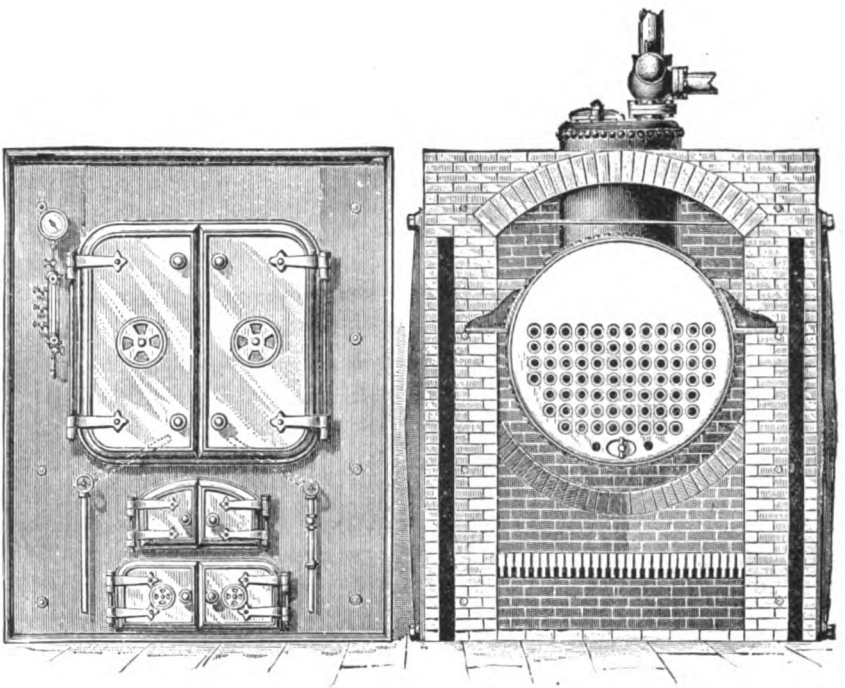

FIG. 437.

The buck-stay is a vertical bar of cast or wrought iron, of a section adapted to resist transverse bending. They are used in pairs on opposite sides of the setting, drawn together by the tie-rods and binding the section of the wall against which they bear. Usually there are three pairs in the ordinary length of a boiler-setting. Their section may be a T iron, with the flat of the head against the wall (Fig. 442), or any convenient structural section may be used. Old rails used in pairs will be met quite often. Tie-rods need not be used at the bottom

of the setting, provided the feet of the buck-stays be let securely into the footings upon which the walls are built (Fig. 459).

266. Hanging of Boilers.—The weight of a shell or sectional boiler is considerable, and when its contents of water are added, the method of carrying this weight requires to be carefully studied.

Two methods are usual. The boiler is supported at its sides at about the horizontal diameter, or it is hung from above by eyes and links attached to its upper part, and symmetrical to a vertical diameter.

The first plan calls for projecting brackets or "lugs" to be riveted to the shell along its sides, and giving strength sufficient to carry the weight. These lugs will be of cast iron or steel castings, either solid or with the projecting part fitted to slide home in a socket made for it and fastened to the shell. The number of these lugs will be fixed by the length of the boiler. Two on a side is best if possible, since then every lug carries not far from one fourth of the load, no matter how the boiler may be deformed by expansion. If there are three or more lugs on a side, then when the lower elements of the boiler lengthen, the end lugs lift, and most of the weight is on the central pair; if the lower elements shorten relatively, then the boiler lifts off the central pair and is carried at the ends. These changes in length come from impact of cold feed-water, or of cold air when the fire-doors are opened wide and suddenly. Figs. 436, 375, 441, and others show such lugs and their forms.

The other method of support calls for an eye on the top of the boiler (Fig. 321), or on the two sides (Fig. 438), into which a hooked link may be fitted, so as to hang the boiler to a pair of cross-beams of structural material, the latter carried either upon the side walls as abutments, or by metal columns independent of the side walls. Sectional boilers may be hung from the top, from the sides, or from the bottom, as may be most convenient and preferred.

The method of support by lugs usually depends upon the

side walls to carry the weight. To prevent injury to the walls, the wall is fitted with plates under the lugs to distribute the load, and to furnish a surface for the motion of rollers of half-inch round iron inserted between the plate and the lug-surfaces at one end so as to allow a free end to move lengthwise in expanding and contracting without pushing the wall or deforming the shell (Fig. 457). The rollers may be omitted

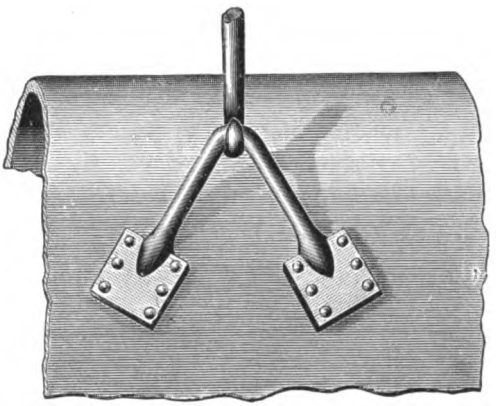

FIG. 438.

in light boilers, and the boiler allowed to slide on the plate. This pushes the wall about, however. The end to be fixed is determined by the convenience of the attachments to the boiler. The locomotive boiler is fixed at the front to the cylinders and frames, and is free to move at the fire-box end; most stationary boilers are fixed at the furnace end and expand toward the rear.

Expansion in suspended boilers is provided for by the suspending link, and by this their expansion is independent of the brickwork. This is the great advantage of this method of hanging. The objection to it with large-diameter shell boilers is that the weight tends to make the flexible shell take an oval shape when pressure is low, while the internal pressure restores the cylindrical shape when it rises again. The flexure of the longitudinal joints caused by these changes of shape causes grooving near the joints, to be discussed in

pars. 338 to 343. With shells of small diameter this trouble is scarcely felt.

With very long cylindrical boilers the necessity for many points of support conflicts with the considerable changes of shape by heat in such long lengths. This has given rise to the method of hanging by means of equalizing-levers over the transverse supporting beams (see Fig. 372), whereby each eye carries its proportion of load in every condition of shape; or the same result is approximated by using stiff spiral springs (like car-springs) under the nut on the suspending links which hook into the eyes. When the boiler curves itself lengthwise, the spring accommodates the excess or relief of load, without causing so much strain on the plates of the boiler itself. A skilful designer, compelled to use long boilers, has cut them into lengths and linked them together by flexible

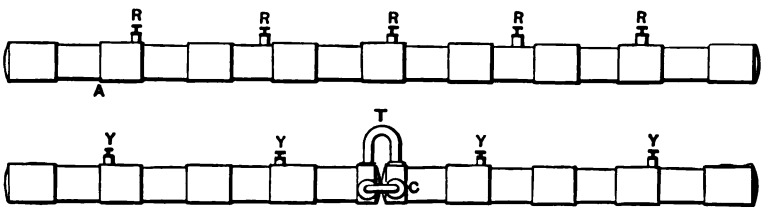

FIG. 439.

connections of copper tube (Fig. 439), in order to meet this serious trouble.

267. Boiler-fronts.—It would be possible to make the front part of a boiler-setting of brick, but it is not usual to do so, because the openings through it for access to the furnace and ash-pit, and to the boiler itself, would make troublesome and short-lived constructions in brick, and would make the door-fittings difficult. Hence the use of cast-iron fronts for settings is universal, for their convenience and cheapness, for ease of fitting, and for the effect to the eye which as completed structures the boiler-settings can be made to produce. They will be made in one or two sections set up edgewise, and held in place by the nuts on the ends of the longitudinal tie-rods through the walls (par. 265).

Boiler-fronts are either full fronts or half fronts. The full fronts are sometimes called flush fronts, and the half fronts are also called extension or overhanging fronts. The full or flush front will be used always with sectional boilers, usually with tubular boilers, in which the products of combustion are to be carried backwards over the top of the shell to a chimney behind the boiler, and quite often where the gases are to be taken from the front end of the boiler to a chimney by means of a sheet-iron duct. When the full front is used the side walls will be carried up level with the top of the front (Fig. 436), and the joint between the side walls over the boiler will in this case be made either arching, or by means of filling in on top of the boiler with some non-conducting material.

The half fronts will be used where the side walls are to be carried up to the height of the supporting lugs only, and the smoke-box is to be made an integral part of the boiler itself (Figs. 442 and 459). A cylinder of a relatively light boiler-plate is secured to the shell of the boiler itself and, projecting beyond the plane of the front, forms a smoke-box independently of it. This arrangement is shown in Fig. 442. It implies of necessity that the gases are to be taken off from the smoke-box either directly to a chimney-stack or by means of a sheet-metal flue or breeching.

There will be three sets of openings to be made in the boiler-front, each of which must be closed by proper doors. In the full or flush front these three openings are all made in the front proper. In the half front the two lower ones will be formed in the front, and the upper will be a part of the structure of the extension smoke-box. The top of the front is then curved to match the curvature of the shell or smoke-box which protrudes beyond it (Fig. 443). The lowest opening gives access to the space below the grates, which is called the ash-pit. The doors which close it are called the ash-pit doors. These doors are a means of controlling the draft of air which passes up through the fire, and will be closed when the fire is to be checked. From examination of Figs. 436 to 445 it will appear that such doors may be either a single

large door, two smaller doors closing a large opening, or two independent openings each with its own door. The advantage of small doors is the diminished strain on the hinges when such doors are opened, and the fact that such short doors are less in the way than long ones. It is not unusual to make

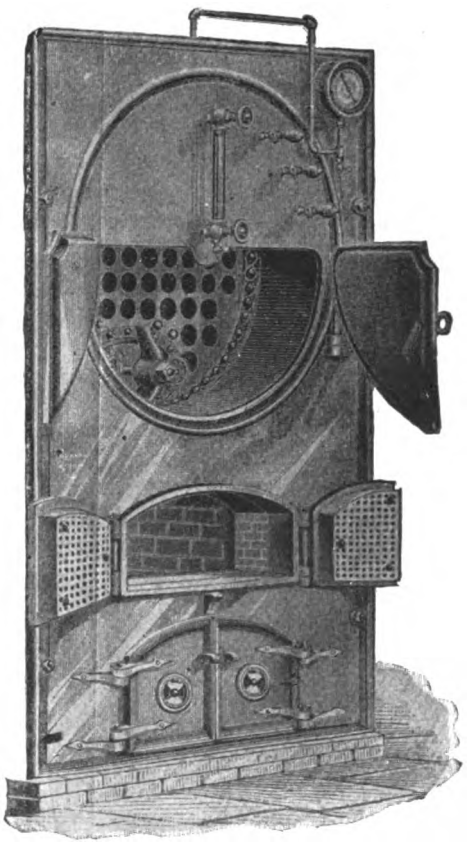

FIG. 440.

register-openings in these doors, but they have comparatively small significance since it is much easier to leave the door slightly open if but a little air is desired.

The second set of doors open into the furnace or fire-box on a level above the grates, and each will be called a fire-door.

Its function is to give access to the fire for charging it with fuel and for cleaning, and it also has a use in the control of the fire, since by leaving it open cold air from the fire-room enters above the fire, lowering the temperature of the hot gases by dilution and actually serving to cool the boiler, while at the same time the easy passage of air over the fire checks the draft through it. The same considerations as to the use of one large or two smaller doors are to be noted with respect to the fire-door, but the latter requires that it should give access for coaling and cleaning to every part of the grates, and consequently with a wide furnace two doors become a necessity. They have the further advantage that in coaling and cleaning they need not both be open at once. The single door is better than two doors which overlap, when it is possible to use it, because it closes the fire-opening somewhat more tightly. The minimum width of a fire-door should permit the easy handling of an average coal-scoop, which measures for small coal 14 inches across.

The fire-door furthermore requires a special construction to prevent its becoming unduly hot by radiating heat from the fire. This is done by forming an air-space between the outer surface, which is the door proper, and the inner plate of perforated iron which is fastened to the door with distance-pieces to keep them at a fixed distance apart (Figs. 440 and 441). The inner or baffle plate receives the heat of the fire, and the circulating air between the baffle-plate and the door serves to carry off some of the heat. The fire-door is often also made with register-openings to permit a certain amount of air to enter this air-space and so reach the fire above the grates. It is difficult to provide sufficient area to make these openings serviceable to supply oxygen for combustion, but the old rule used to be that such openings should be 2 square inches for each square foot of grate-surface with short-flame fuels, and 5 square inches where the fuel contained much volatile matter. The real use of air above the fire can be best obtained by leaving the door slightly open when it is required.

The third set of doors will be called in shell boilers the flue-

doors, and are intended to give access to the front of the boiler for cleansing the flues or tubes and for inspection. In full fronts and with boilers of large width it is desirable to make these doors double in order to keep their weight down

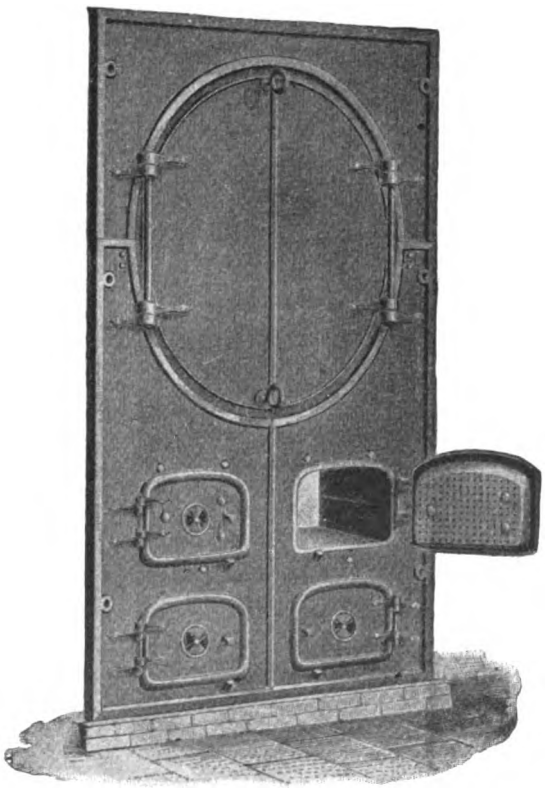

FIG. 441.

They will then be arranged to open on vertical hinges, and will be held shut by a common latch. In extension fronts it becomes more convenient to make the opening to the smoke-box for inspection by a door turning upon a horizontal hinge at about the horizontal diameter. Figs. 436 to 447 and

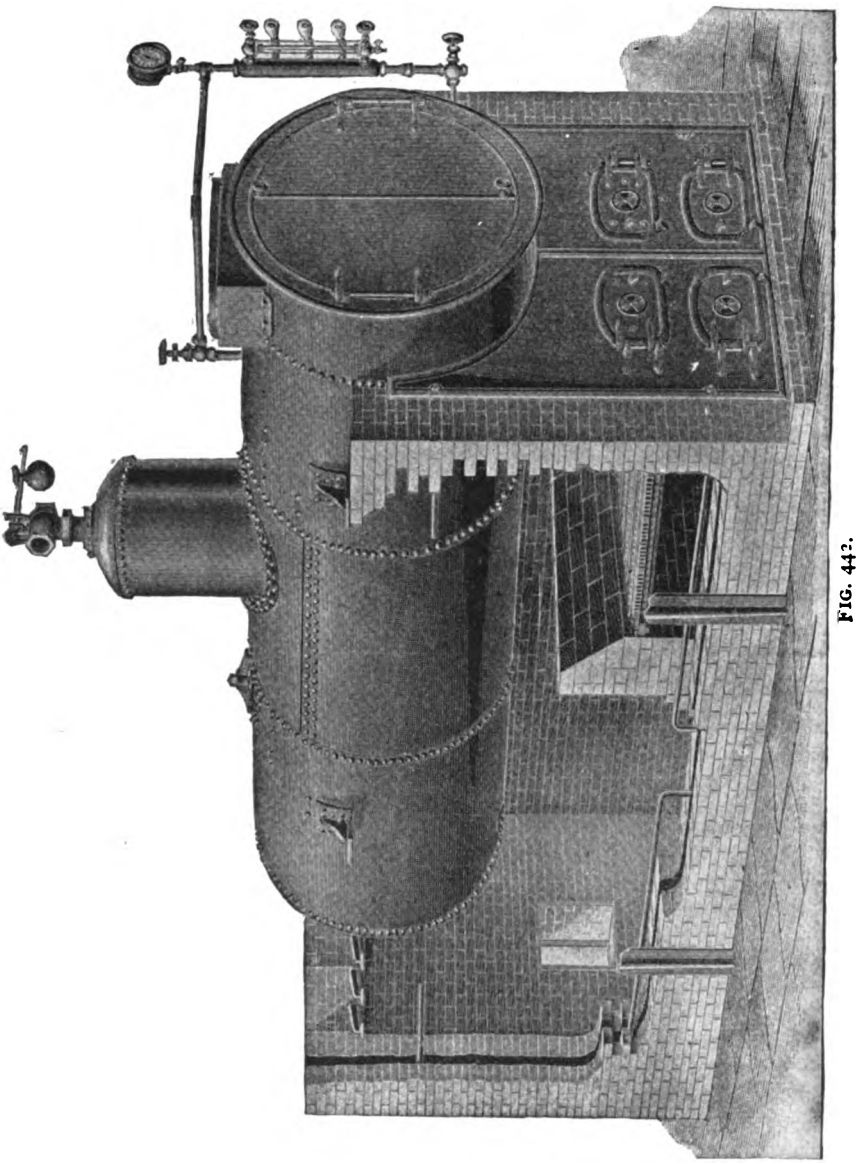

FIG. 442.

Fig. 451 show typical constructions covering these points and methods.

Fig. 433 illustrates a type of extended front which has received some approval among the pure-water conditions in

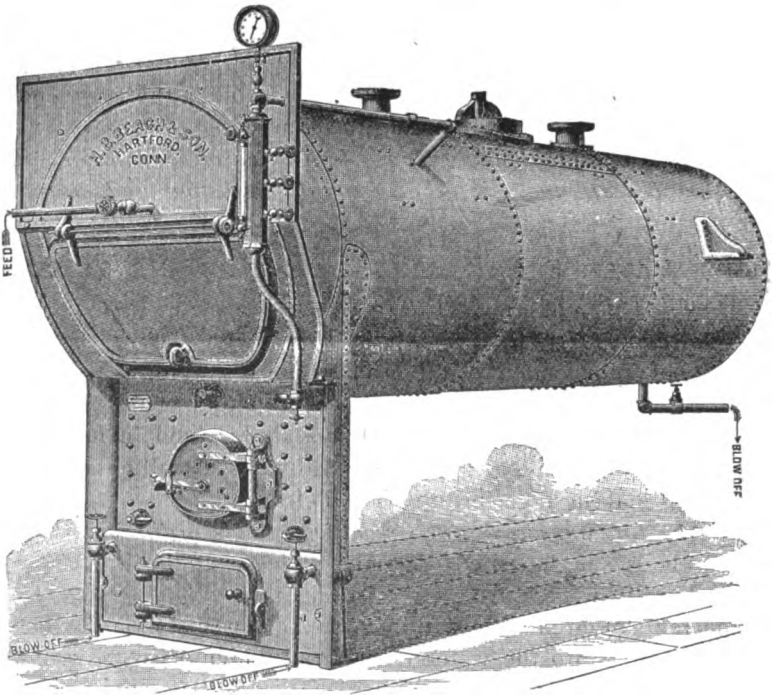

FIG. 433.

New England. The front of the furnace is a water-leg, through which the fire-door is made. It would be improved by provisions to secure a determinate circulation of the water. Cleansing is effected by the two blow-off pipes (par. 324).

268. The Dead-plate and Mouthpiece of the Furnace. —When the smoke-box or front connection is formed behind the cast-iron front, the boiler will stand behind that front a distance which is the depth of that smoke-box (Fig. 436). The front end of the grate-bars should not project beyond the end of the heating-surface of the boiler, and therefore a distance equal to the depth of the smoke-box will lie behind the fire-door and between it and the end of the bars. This sup-

plies furthermore a space such as is required in a method of firing which is called the coking method of firing, which has given rise to the name of dead-plate to the solid cast-iron plate which forms the bottom of the furnace mouthpiece. The coking method of firing is to charge the bituminous coal

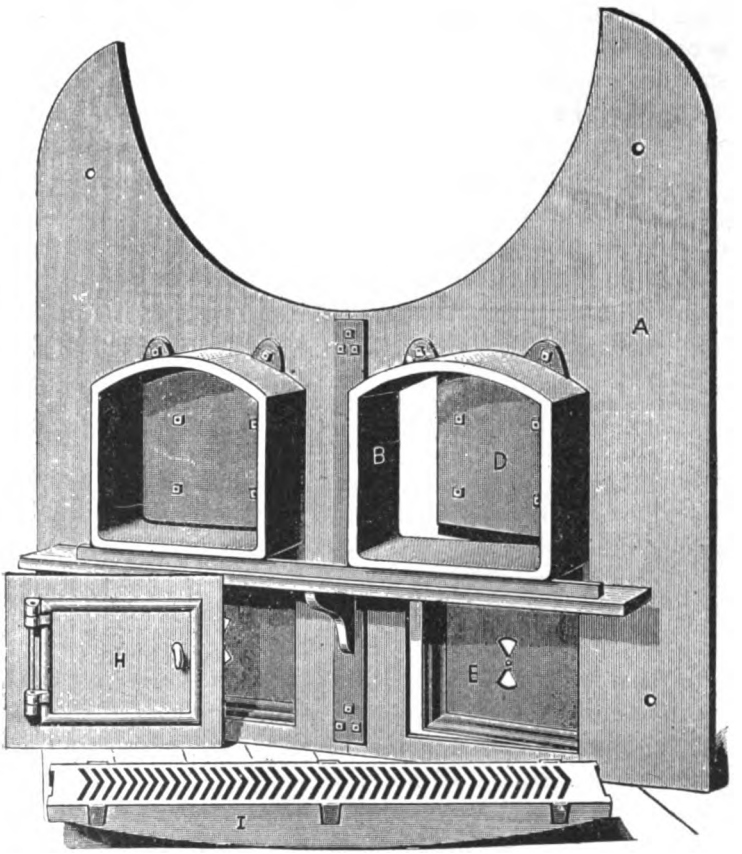

FIG. 443.

upon this dead-plate and not upon the grate-surface proper. The heat from the burning fuel on the grates distils off the gas and all volatile matter which passes backwards over the fire; but since there was no openings in the dead-plate, oxygen does not come up through the fresh coal to set fire to

it. When distillation has proceeded far enough, and the coal is partly made into coke upon the dead-plate, it is then pushed back upon the grate-area and burned as hard coal would be burned. Even with anthracite firing, where no coking is required, the dead-plate remains as a distance-piece, but without significance or use in firing. It usually forms the top of the opening into the ash-pit below, and is simply a plate of cast iron built into the brickwork of the setting at the sides (Fig. 443). In some cases the dead-plate has been made to drop by hinging the front end against the boiler-front and holding up the back by a latch which can be released. The object of this arrangement was to permit clinker and ashes too large to pass through the grates into the ash-pit to be dumped into the latter over the ends of the bars without coming out through the fire-door and causing unpleasant odors from any cause which such material might give off in the open fire-room.

The sides and top of the furnace-mouth opening will be made either of cast iron, like the dead-plate which forms its bottom, or of fire-brick. The latter may be either the ordinary forms of fire-brick, or specially moulded shapes can be obtained whereby the mouthpiece has but a few joints in it to give trouble in service. The mouthpiece must flare towards the furnace in order that an opening smaller than the width of the grates may permit access to every part of the grate, and the injury from firing-tools and from the action of the heat of the fire makes trouble with ordinary brick construction. The arch over the door is also a flat one which it is troublesome to make and maintain if of many separate pieces. The sides are sometimes of the usual sizes of brick, and the top of cast iron.

269. **The Ash-pit.**—The ash-pit, as its name indicates, is to catch the refuse incombustible matter when the fires are cleansed. It is simply formed by the sides which form the furnace, and is paved on its bottom with fire-brick also. The bottom is sometimes made lower than the general floor-level (Fig. 444) in order that water may be allowed to lie in the

depression thus formed. The object of the water is first to quench incandescent matter which if allowed to glow in the ash-pit would heat and soften the grate-bars. It is desirable also that if sulphur-gases are given off from such ash, the process should be stopped at once. It is further urged that the steam formed from this water will tend to keep the grate-bars cool on its passage through them, and the combustion of the hydrogen, when such steam is dissociated in the fire, will add to the heat of the usual combustion. The objection to

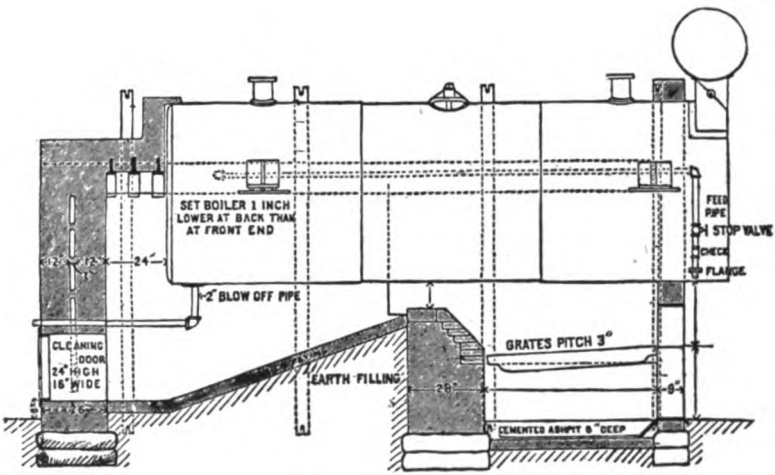

FIG. 444.

this is that the dissociation of the steam cools the fire itself exactly to the same extent that the combustion of hydrogen would raise its temperature. With short-flame fuel the hydrogen may act to lengthen the flame and increase the effect of radiation in a perceptible degree. With long-flame fuel its effect is not observable. It is a question whether steam from the ash-pit may not act to rust metallic surfaces and to form a more active compound with the sulphur-gas given off than when that gas is dry.

When the air for combustion is to be supplied to the fire by mechanical means so as to create an artificial draught by pressure below the grates, the flues or ducts for such artificial

draught will be carried into the ash-pit. The best places are the side walls, rather than the bottom, since it is difficult to keep ashes from dropping into the ducts when the openings are directly under the grates. These openings will be controlled with proper dampers operated from outside of the setting.

In large plants where the weight of ashes to be disposed of in any day becomes very large, it is worth while to arrange the ash-pits so as to deliver their accumulations into a tunnel underneath them through which convenient wagons may be wheeled to receive the contents of each pit as it stands under a convenient opening below it. This principle also becomes of importance when the mechanical methods of firing are used whereby the grate is made to be self-cleansing and discharges its ash and incombustible matter continuously over its end. If the wagon method is inconvenient, it may be replaced by a continuous conveyor whereby the discharge from each grate or ash-pit falls upon a continuously moving band, and is carried by it and dumped into some convenient receptacle outside.

270. The Furnace.—The furnace of the boiler forms the very central feature of a successful and economical power plant, because it is there that the energy resident in the fuel is liberated and transformed from potential to actual energy. The chemical reactions between carbon, hydrogen, and oxygen are the means for the liberation of this energy, and the subject is so important that the boiler-furnace may properly claim a later chapter for itself. The subject further must embrace the questions of economy and efficiency consequent upon the rapidity or intensity of these chemical reactions, and the subjects of the absorption of the liberated heat by the water and its transfer to the metal of heating-surface, belong also to the same category. The design of the furnace with respect to the fuel to be used in it is also a matter of primary importance, whether solid, liquid, or gaseous, and, if solid, whether wood or coal is to be used and in what forms; mechanical stoking, smoke-prevention, and similar questions attach to it. For the

present purpose in its relation to the boiler-setting certain practical details only will be considered.

271. The Grate-bars. Stationary Grates.—In a boiler-furnace to be used with a solid fuel such as coal, the fuel must be supported in such a manner that the necessary oxygen for combustion can be brought into contact with the carbon of the fuel by passing up through the body on which it lies. This demands that the grate-surface shall be so constructed that coal shall not fall through the holes left for the passage of air. In general the problem has been met by making the grate of bars, either of cast iron or of wrought iron, solid or hollow. Grate-bars may be divided into three classes: the fixed or stationary grates, shaking and dumping grates, and mechanical or travelling grates.

The stationary or fixed grates are almost always of cast-iron bars (Fig. 447). It is most usual to run these bars lengthwise or in the direction of the axis of the boiler and perpendicular to the front. It is easier to clean them when arranged this way. They will be supported by transverse bars, usually of wrought iron, let into the brickwork of the side walls. There is usually one at the front and one at the back supporting the bars at their ends. It may be, however, that instead of running the bar continuously the whole depth of the furnace, it will be divided in the middle, and each short bar will rest upon a third bearer midway between the other two (Fig. 445). The conditions which a cast-iron grate-bar must fulfil are as follows:

(1) The bar must be cheap to make by casting in the open sand of the foundry.

(2) It must give adequate support to the coal on it, and yet must permit the access of air through it from below. This air is depended on to keep the bar cool, as well as to furnish the oxygen for combustion.

(3) The bar must be of such design that it shall not warp under the unequal temperature of its upper and lower sides. Warping must be prevented both vertically and sidewise.

(4) The bar must be easily cleaned from ashes and clinker,

and yet must not be so fragile as to break under the ordinary treatment with the fire-tools. This convenience of cleaning is usually secured by giving the bar a section like a wedge with

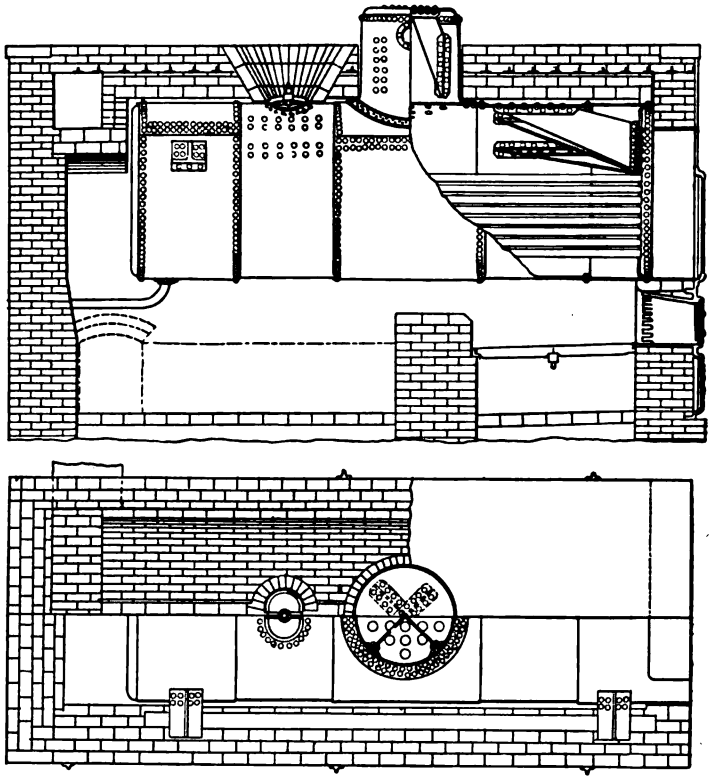

FIG. 445.

the broad back up. Any solid matter which will pass through the top opening will go the rest of the way and fall into the pit.

(5) The bar must be strong enough to carry the load caused by the weight of fuel without sagging or breaking even when its top is red-hot. This is secured by giving considerable depth vertically to the bar, so that the bottom side of it, which is met by the incoming cold air, shall be quite a distance away from the hot surface of the top, which would warm it by conduction.

(6) The bar must not be so heavy that the handling of it becomes difficult in the contracted quarters in which it is to be placed.

It would appear that a maximum relation between the supporting function of the bar and free passage of air would be reached when each was made 50 per cent of the surface of the grate. Practically this relation cannot be reached without causing much unburned fuel to fall into the ash-pit to be wasted, or to entail the labor of picking over if it is to be saved. The difficulty is worse as the size of the fuel grows smaller. It is usual to consider the bar satisfactory for the passage of air when 25 per cent of air-space is presented by its design. The proportion of air-space to solid surface of the bar is usually determined by the expedient of laying the bar upon a piece of stiff paper, tracing its profiles of openings with a sharp pencil, cutting out the paper representing the openings, and weighing on delicate scales the relation of the weight of the air-space and solid bar in any given unit of area.

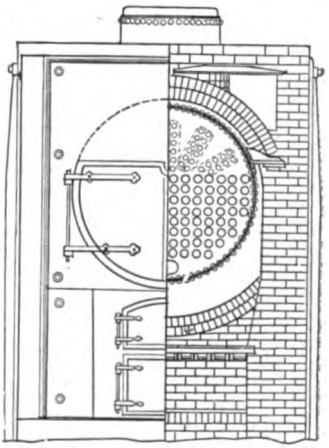

FIG. 446.

The usual deterioration and failure of grate-bars comes from their warping, from fusion of the top surface, and consequent softening and loss of strength, and from breaking through by their own deterioration or from a deterioration caused by the continued heat.

Wrought-iron bars when made solid are particularly troublesome from a tendency to warp and to bend from softening by heat. Wrought iron is less stiff than cast iron.

When for any reason the air which enters under the grates is to be preheated so as to lose its cooling effect, solid grate-bars of either cast or wrought iron give trouble by their softening. For this condition and in certain other places hollow

wrought-iron grate-bars are used through which the feed-water or the water from the boiler is caused to circulate. This is to keep them from reaching the temperature of soften-

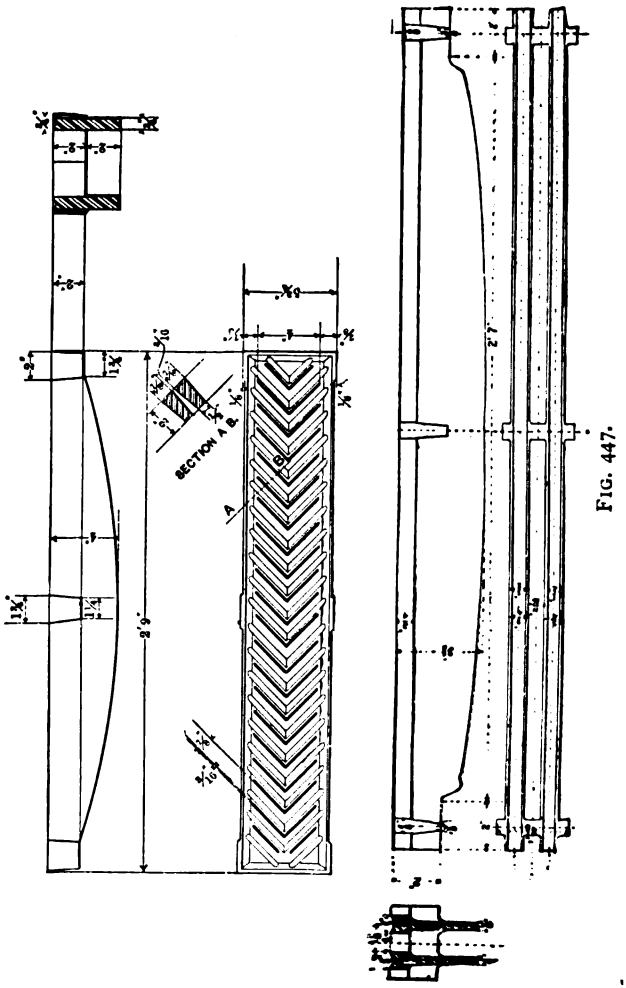

FIG. 447.

ing, and adds to the heating-surface of the boiler. The difficulties from the expansion of such water-grates make them troublesome to join to the ends, but they have formed a satisfactory solution for many problems, and are a necessity in

what is called the down-draft furnace, to be referred to hereafter. Some of the bars in locomotive-boilers are usually water-tubes.

With very fine fuel, such as coal-dust, and where sawdust is used as fuel, the grate-bar has to become a perforated plate. Where oil or gas is used the grate-bar disappears entirely, and the gas will be passed up through the perforations made in a fire-brick or similar floor which converts the grate into a form of burner.

272. Shaking and Dumping Grate-bars.—The stationary or fixed grate-bar is cleaned by running a proper tool, called a slice-bar, over the top surface, or a poker between the bars.

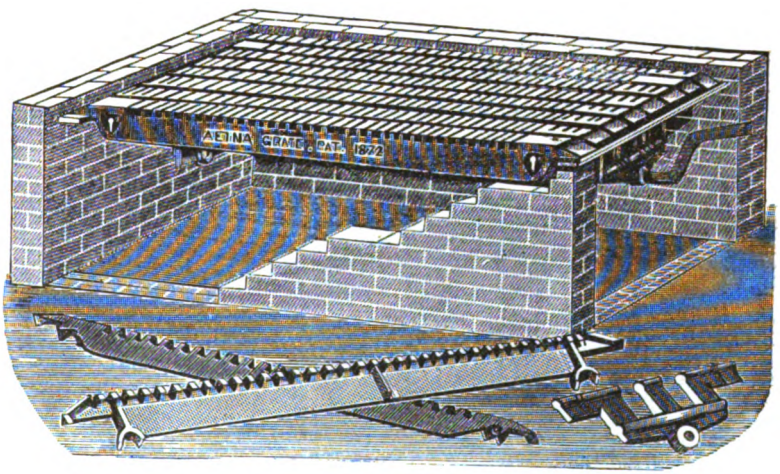

FIG. 448.

This is a labor of considerable difficulty and requires that the furnace-door should be open while it is going on, and the cold air thus admitted not only deadens the fire but cools the heating-surface and checks the generation of steam. What are called shaking-grates are grates whose bars are so constructed that by a lever or similar means a motion can be given to the bars, from without the setting, whereby the fire shall be agitated, the fine dust or ashes shall be shaken downwards through the openings of the bars, and the ash or clinker

which has attached itself to the top surface of the bars shall be broken up and ground into pieces fine enough to drop through and leave the fire clean. This result is attained in various designs of grate-bars by different mechanical methods. In some the bars are supported by proper bearers at their ends, to which bearers such a motion is given that the alternate bars move lengthwise in opposite directions through several inches of travel when the lever of the shaking mechanism is worked (Fig. 448). In others each individual bar receives a rocking motion around the axis upon which it is supported. The rocking motion lifts the fire and lowers it, thus shaking out the accumulation of ashes and dirt.

Dumping-grates are a form of shaking-grate in which the motion which shakes the bars when carried farther opens sufficient space between the adjacent bars to allow the fire to slip off the top surface of the bar into the space thus opened and

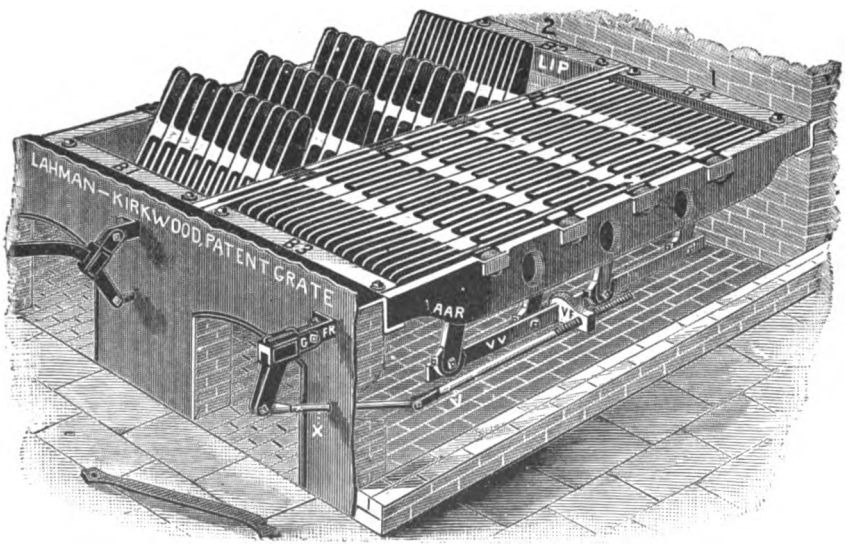

FIG. 449.

fall into the ash-pit below. The difficulty with the dumping type of grate-bar is that carelessness in its use causes a loss of an excess of fuel in cleaning (Fig. 449).

The advantages of the shaking-grate are as follows:

(1) The fire-door is opened for coaling, but not for cleaning.

(2) The fire-box lasts longer, because not exposed to the shrinkage and deterioration caused by cold air coming in upon its heated surface.

(2) The firing is more regular, because the fires are kept in a condition of good efficiency by being always clean, and are not torn to pieces by the effort of the fireman to cleanse them. This is particularly true with anthracite as a fuel. One man can attend to more furnaces when the labor of attending to each is so much lightened.

(4) The duty of the fireman is made less arduous and exhausting when he does not have to face the intense heat of the furnaces at the open doors for so long a time.

The objections to the shaking-gate are as follows:

(1) It does not work with all varieties of bituminous fuel. Where the coal is what is called fat, so that it fuses together on the upper surface of the fire, the shaking-grate does not cleanse the fire, but only leaves a hollow space below the real body of the fire. For coal of this class the use of the slice-bar is necessary in any case, and it might as well be used altogether.

(2) The trouble and annoyance from machinery of any sort in an ash-pit. It cannot be lubricated; it is exposed to grit and dust.

(3) The efficiency of the bar for cleansing usually throws down excess of unburned fuel into the ash-pit. The shaking-grate for stationary practice is usually considered to be a stepping-stone on the way to the use of mechanical stoking, and its advantages are usually reaped with the advantages which the latter offers.

273. Step-grates.—For the burning of fine coal, and particularly in soft varieties where a large quantity of air is a necessity, a form of grate has been long used which is called the step-grate. The bars are flat surfaces or treads arranged so that the upper one slightly overlaps the one below it, while

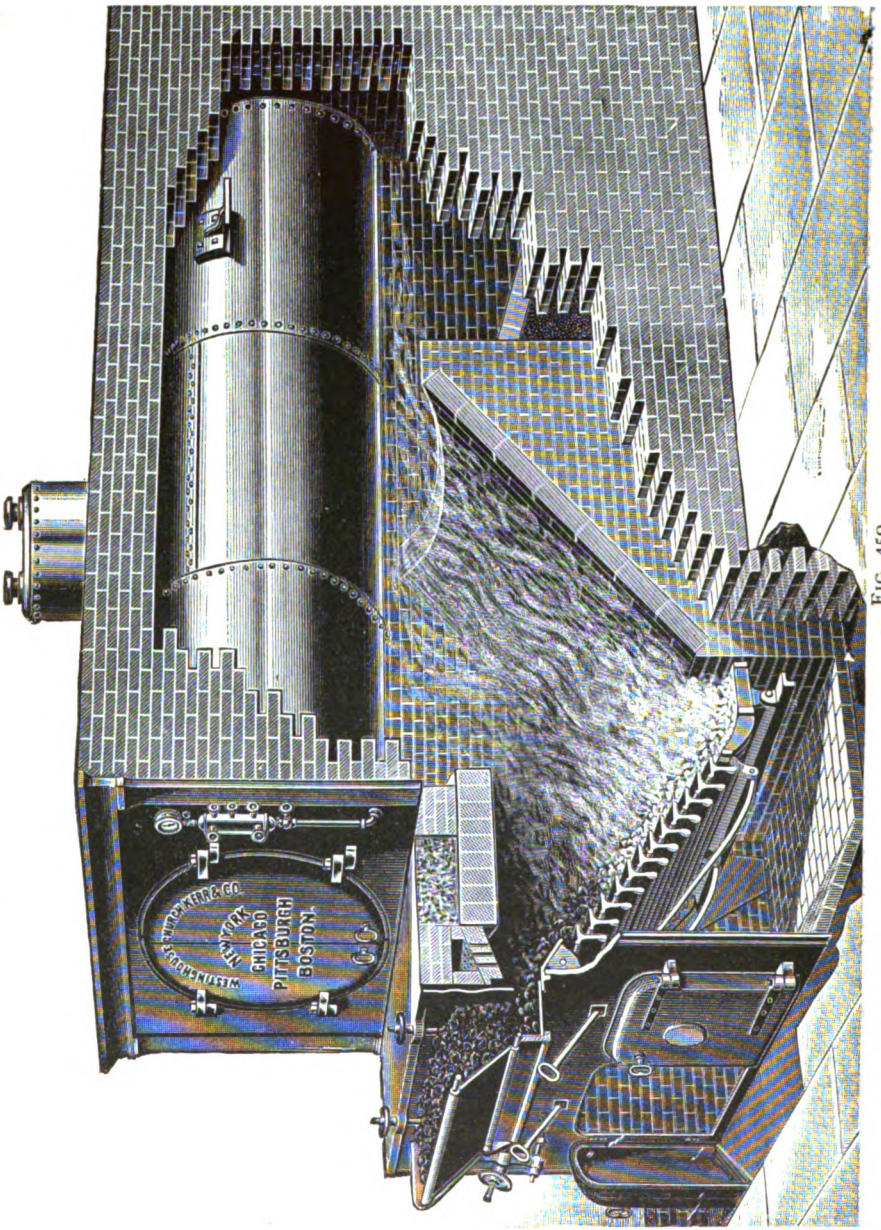
WESTINGHOUSE, CHURCH, KERR & CO.
NEW YORK
CHICAGO
PITTSBURGH
BOSTON.

FIG. 459

leaving the space open which corresponds to the riser in stairway construction for the passage of air. It will be seen that this construction permits abundance of access of air with little or no possibility of coal dropping through the grate-surface. When the bars are laid across the furnace, as is usual, the slice-bar of the fireman can cleanse each bar separately by working through the vertical opening between the bars, or the method of firing may be used whereby the coal is fed first on the upper bar, and from that is gradually pushed down the steps from bar to bar until at the bottom it will be pushed off with all available combustible matter utilized, and only refuse and ash remaining.

It is very easy to make such a step-grate become a shaking, or dumping-grate by arranging each bar so as to permit a motion to tip it down the steps. This can be done either by hand or by mechanical means (Fig. 450).

274. Mechanical or Travelling Grates.—The principle of successive passage of fuel from bar to bar suggested in the previous paragraph leads to a construction of grate which is known as the travelling-grate. The bars, instead of being continuous and solid, are made up of a series of short bars which are pinned together so as to form a flat chain with the links edgewise. Chains of these flat links, made endless, mounted upon proper carrying-rollers at the front of the furnace and at the rear, and having the width of the furnace-area, can be driven by machinery attached to the rollers so as to draw the chain from the front of the furnace to the back, carrying on its surface the fuel to be burned. The speed of driving should be so proportioned that the fresh fuel charged at the front upon the travelling bed of the grate should be completely burned during the period of its transition to the back, so that when a given series of links reaches the rear roller and is dropped over, there is carried with it and dropped only the incombustible matter in that given amount of coal. Such a grate is practically self-cleansing and leads at once to the use of an automatic appliance for feeding the fuel to it to make it complete. Fig. 451 will show a typical travelling-

grate, and Fig. 454 a type of grate in which the passage of fuel from step to step is made to be automatic by mechanical

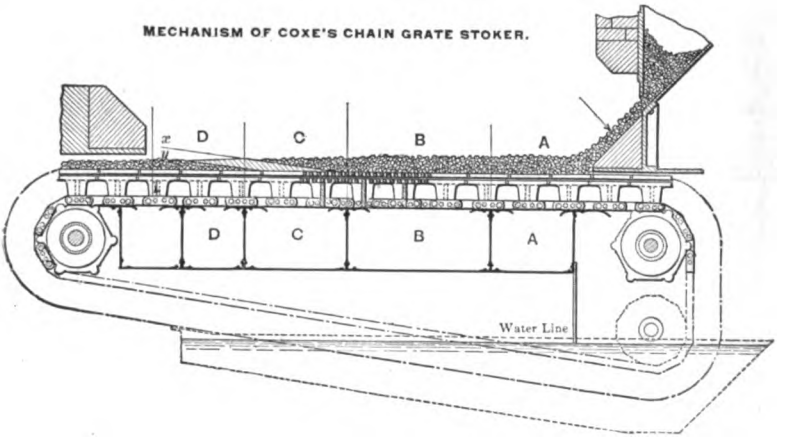

FIG. 451.

means. It will be seen that the mechanical grates of this type lend themselves and lead naturally to the principle of the automatic stokers

275. **Mechanical Stokers.**—If the self-cleansing grate can be combined with automatic feeding by mechanical means of the fuel which is to be burned upon the grate, it will be apparent that not only has the supply of fuel as a source of energy become uniform and continuous, but the combustion of the fuel is made also regular and continuous because the fire is at all times in the same condition. Furthermore, the labor of the fireman has changed from a hard muscular exertion of hand-firing to the skilled supervision of machinery of sufficient power to do the required work. In the mechanical stokers which have been approved the coal is fed upon the travelling or mechanically moving grate from a hopper, either through an opening or between rolls which carry ribs lengthwise so as to form pockets to receive the fuel, whereby the speed of these pockets measures the quantity of fuel delivered (Fig. 360). The travelling-grate or the measuring-rollers can have their speed regulated by simple mechanical means connected

with the steam-pressure; and if the air for combustion is supplied by mechanical means, the volume of that air can be reg-

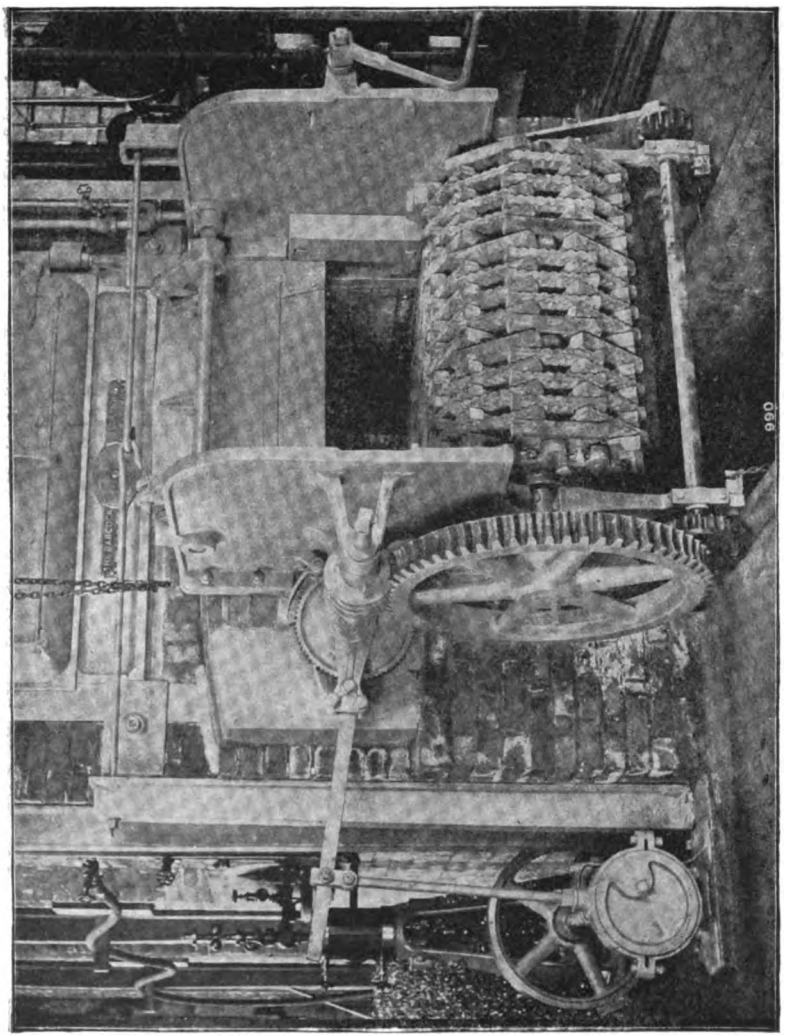

FIG. 452.

ulated by the rise and fall of the pressure of steam by causing the latter to vary the speed of the engine which drives the fan or controls the valve which supplies the steam-jet Fig. 452

shows a form of automatic stoker embodying some or all of these features, and Fig. 453 another type in which the motion

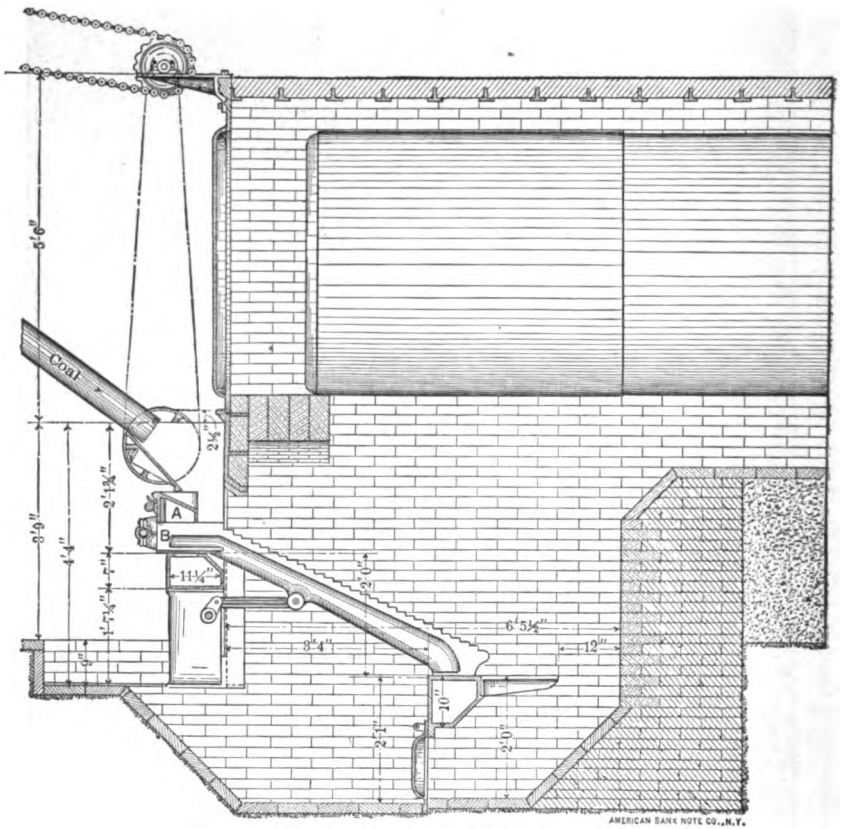

FIG. 453.

of the step-bar itself causes the fuel to be carried down the steps to be delivered as ash at the bottom. It will be seen that the form of grate shown in Fig. 450 can also be very easily and properly fitted to the principle of automatic stoking. The supply of fuel to the hoppers at the boiler-fronts will be done by the principle of mechanical conveyors with elevators if the supply of coal in pockets cannot conveniently be made overhead. If the coal-vault can be over the boiler-

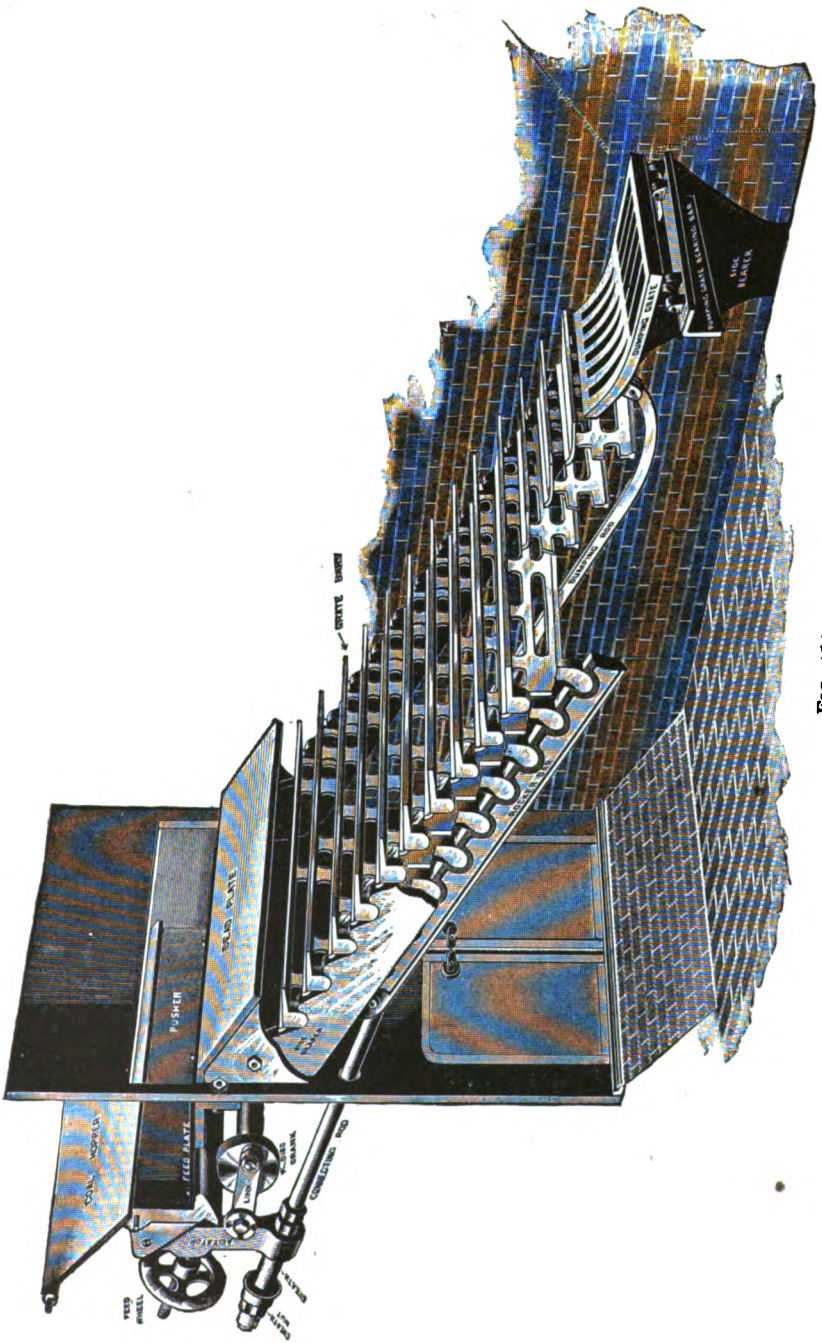

FIG. 454.

Digitized by Google

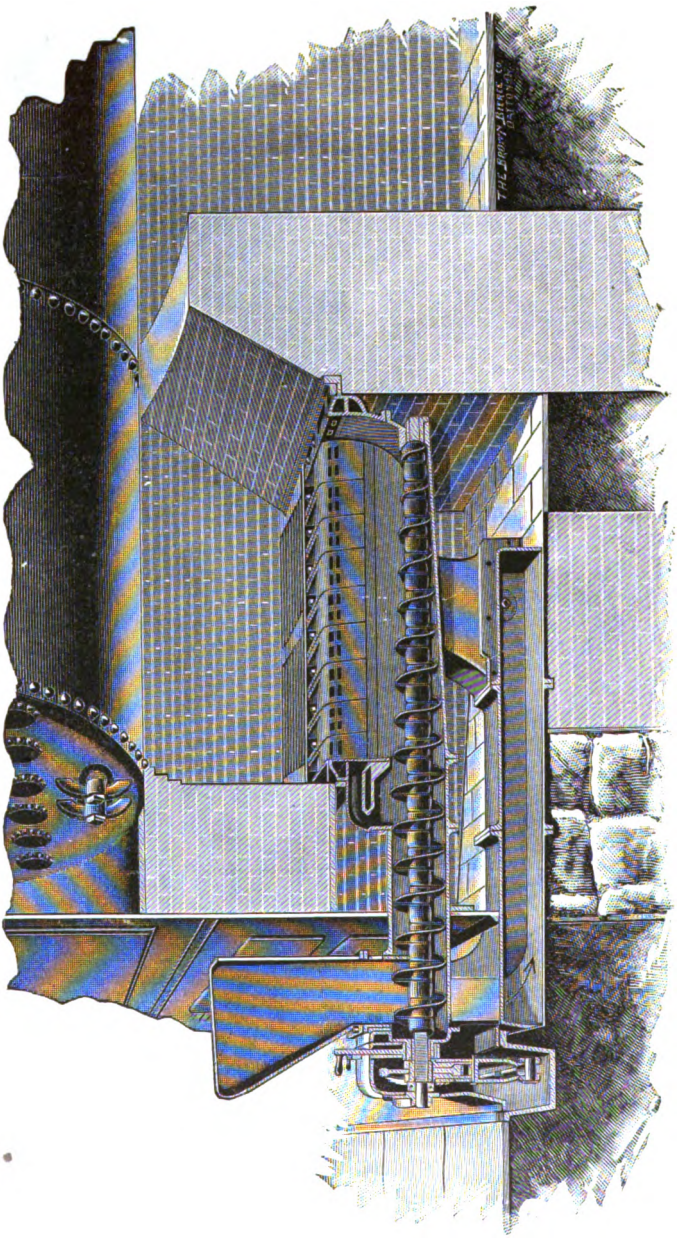

FIG. 455.

room, the coal may descend by gravity through proper spouts into the furnace-hopper without handling.

This principle of mechanical handling of fuel, combined with mechanical handling of ashes (par. 269) and with the principle of automatic control of the machinery of stoking as the steam-pressure may vary, gives to a modern power plant where the principle is applied all advantages derivable from doing away with human labor and replacing it with intelligent control of inanimate force. It has not been proved that the advantages from uniformity and continuous action represent everywhere a surplus sufficient to pay for the increased cost of the installation, but the saving of labor expense leaves a margin, in a plant of any considerable size, which is abundant to offset such cost.

Mechanical stoking has not achieved its best success with the hard varieties of anthracite coal with which the fireman's labor is the least. With certain varieties of bituminous coal which cake and melt it has been found that their working is not satisfactory in every case. Fig. 455 shows a form of stoker in which the feeding of fresh fuel is done from the bottom, so that the products of the first distillation are forced to pass up through the bed of incandescent fuel from which the gases have been removed. This brings them up to the point of ignition, and the slope of the sides of the bed of fuel is covered with coal in the condition of fixed carbon, which when completely burned falls off as clinker or ash at the sides of the grate, or is removed by slicing.

276. Inclined and Horizontal Grates.—It will be noticed by examining Figs. 456 and 457 that a difference of practice prevails with respect to arranging the grate-bars horizontally, or inclining them backwards at the back in the proportion of about 3 inches in 6 feet. The practice of inclining is quite usual, in order that the under surface of the fire may come more nearly normal to the incoming air-currents, so as to invite them to pass equally through all parts of the fire, rather than to take the easiest course. In sectional boilers with inclined water-tubes the inclined grate is of advantage in

keeping the surface of the radiating fire more nearly parallel to the absorbing surface of the tubes. Inclined grates are also easier to clean by slicing.

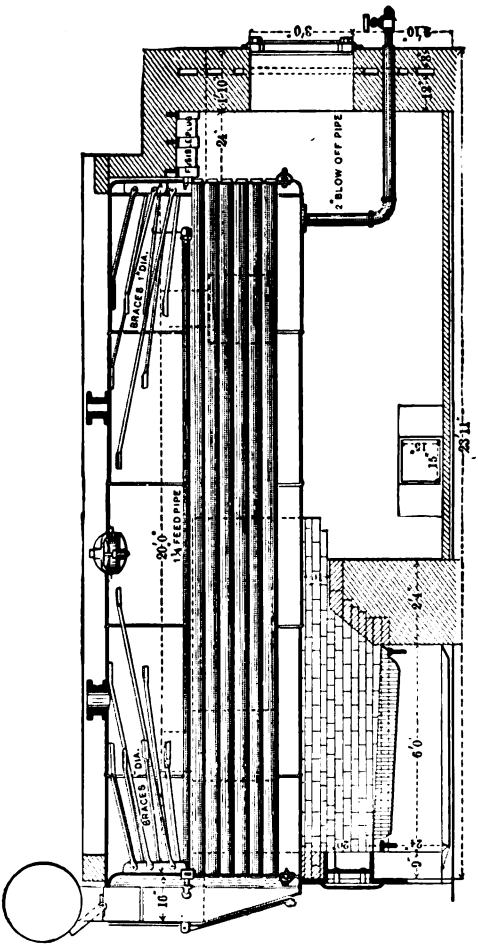

FIG. 456.

The horizontal grate renders it more easy to keep the fire of even thickness at the front and back, and makes it slightly easier to withdraw the clinker and other solid matter which is to be drawn forward and out through the fire-door in arrange-

ments of this sort. The general prevalence of the inclined bar seems to indicate that it offers advantages over the other arrangement.

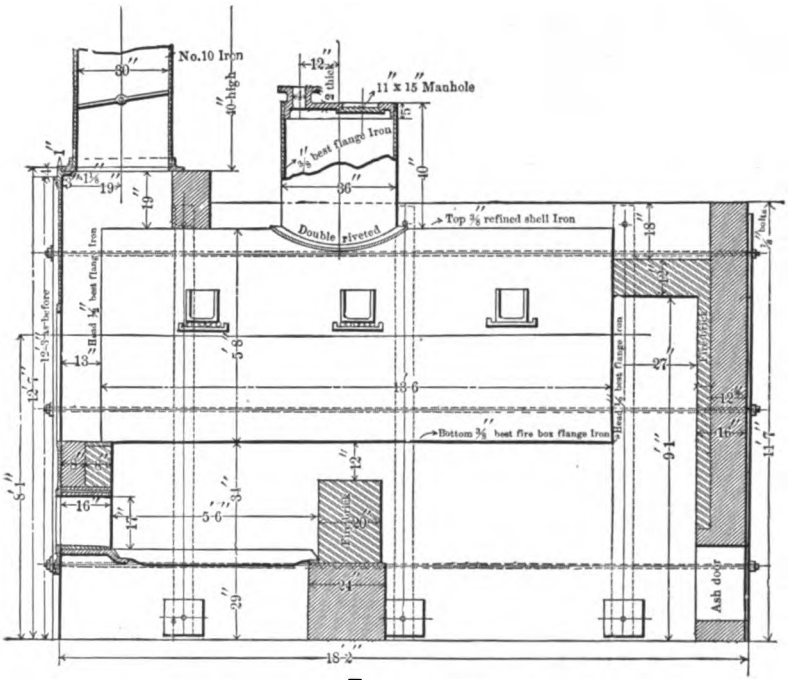

FIG. 457.

The level of the grate-bars with hand-firing should be so selected as to make the cleaning and coaling convenient to the fireman. This seems to be secured by having the top of the grates about 30 inches above the general floor-level. The depth of the furnace or the length of the bar with hand-firing seems to be determined by the twofold considerations of ease of cleaning and the satisfactory spreading of fuel. When the fireman stands on the floor-level he can easily deliver coal with precision at the back of the grate, which is 6 or even 7 feet deep. When he stands above the grates, as in the case of the locomotive, he can throw coal to the back of a fire-box 10 feet deep. Cleaning however, by hand, cannot easily be done with a furnace deeper than 6 feet, and this is usually

placed for the limit of the length of the grate-bar. With shaking or mechanical grates the grate could be deeper if it were otherwise desirable.

277. The Bridge-wall.—The back of the ash-pit and of the furnace or fire-box is made by a low wall over whose top the gases and products of combustion are to pass. It separates this space in the setting from the combustion-chamber behind it. In so far as it is merely a separating wall it might be made of 8 inches in thickness, but inasmuch as with

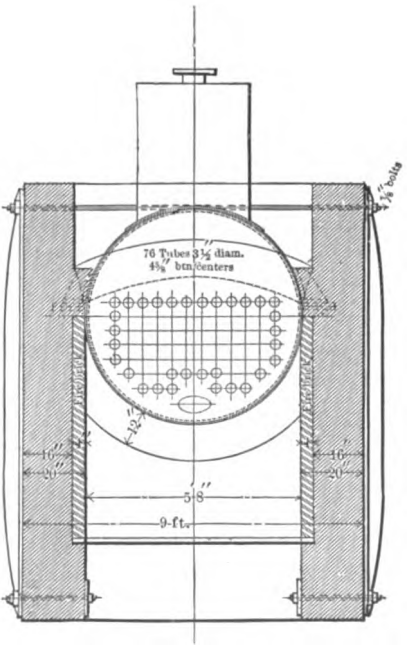

FIG. 458.

stationary grates it is liable to suffer impact from the slice-bar in cleaning the top of the grates, it is more usual to give it a thickness from the bottom to the line of the grates of 2½ or even 3 bricks lengthwise, giving a dimension of from 20 to 24 inches. It is not necessary that at the top it should be of this full width, and therefore it is quite usual to taper it from the line of the grates backwards, either from the front or from

the back, so as to give it a width of one brick or 8 inches only at the top. Examples of both methods of tapering will

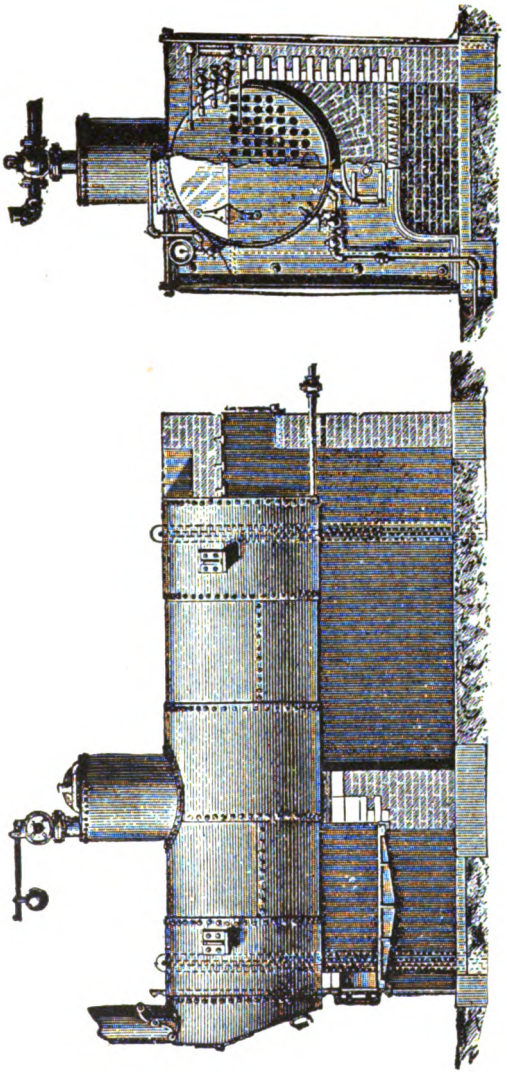

FIG. 459.

be found in the illustrations Figs. 436 to 461. The objection to tapering from the front or fire-box side is that so much

of the fire as lies upon the sloping surface does not receive its full proportion of air, although this is corrected in part by the slanting direction which the air takes in passing from the

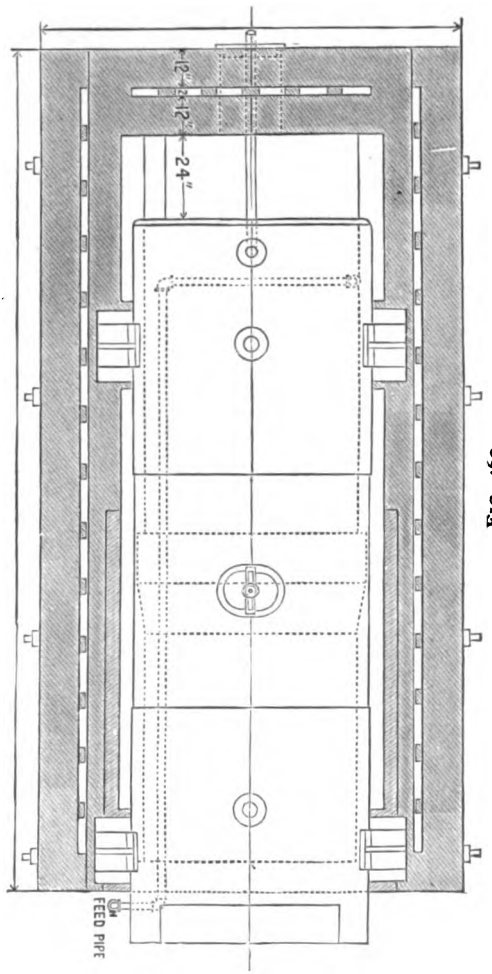

FIG. 460.

grates to the top of the bridge. The diminished thickness at the top is of advantage in diminishing the friction of the gases in passing over the bridge, and in rendering it unlikely that misdirected fuel will be caught upon it. It will be observed

also that there is difference of practice as to making the top of the bridge-wall a horizontal line, or an inverted arch parallel to the circumference of the shell. The inverted arch is supposed to direct the currents of hot gas and flame close to the shell. It makes, however, a very deep corner where the height from the grate-surface is so much greater than at the middle. The horizontal wall is easier to make, keeps the fire of equal intensity over its whole width, and the tendency of hot gas and flame is to keep to the upper part of its passage in any event.

The bridge-wall is represented as solid in the foregoing illustrations: it is quite common to perforate its rear at or

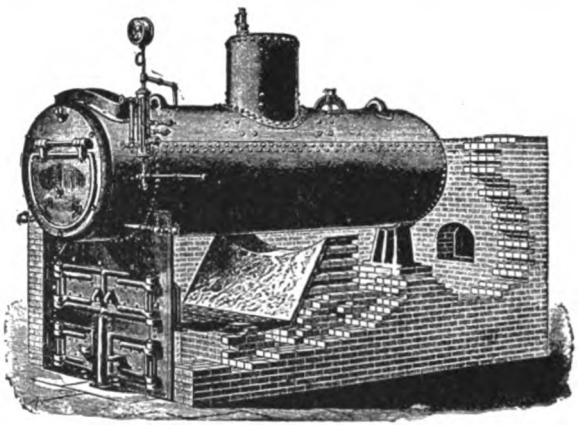

FIG. 461..

near its top, and to make openings into a hollow within it to which air can have access from the outside. The draught of the chimney will draw air in through this hollow wall, where it will become heated by contact with the hot bricks, and passing through the opening will mix with the flowing products of combustion over the top, and help to complete their combustion (Fig. 462). With this same purpose the bridge-wall is often made of a hollow cast-iron box with similar perforations at its back. It will be seen also that a metallic bridge-wall may be filled with water to be evaporated, and, if

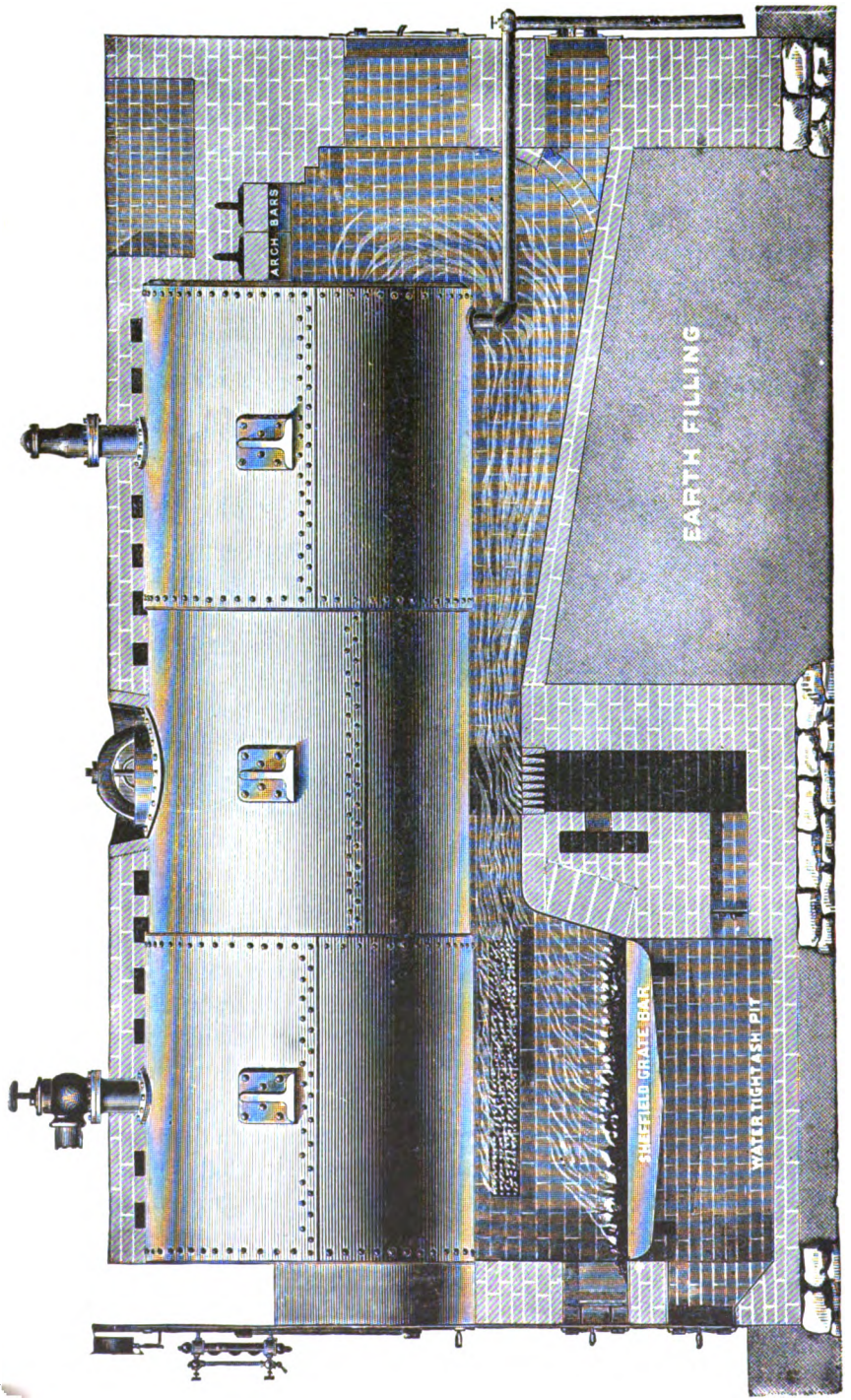
ARCH BARS
EARTH FILLING
SHEFFIELD GRATE BAR
WATER TIGHT ASH PIT

FIG. 462.

proper circulation is kept up within it, it can form an efficient addition to the heating-surface. If water-grates are to be used in a brick setting, the water bridge-wall becomes, practically, a necessity.

278. The Combustion-chamber.—Behind the bridge-wall and underneath the shell of the boiler is an open space intended to permit complete combustion of the carbon which may come over the bridge-wall in the form of flame or combustible gas. For this reason it is called the combustion-chamber, even if, as is the case in anthracite practice, there is really no combustion to take place within it. It is desirable to have it with gas-fuels in order that a space may be made in which the boiler shall not be too closely forced into contact with the hot gases and extinguish them by its lowered temperature, and, furthermore, in which there shall be permitted both room enough and time enough for a proper union of oxygen with the gases. It is furthermore of advantage, if otherwise practicable, to introduce refractory bricks or similar material into this combustion-chamber which shall serve to keep up the temperature of the flame and gases above the point below which no chemical union can occur. In anthracite practice this chamber can be filled up in part or largely without disadvantage. In bituminous practice this would cause a smoky and wasteful combustion. Fig. 463 shows a type of a setting prevalent at one time in which the small size of the combustion-chamber may be credited with causing very smoky chimneys. The combustion-chamber serves also as a catch-chamber to hold some of the particles of ash and flue-dust which will be drawn out of the fire by a strong draught, but which will be precipitated by the lower velocity of the gas-currents in the large area behind the bridge-wall. This makes it necessary that there should be doors of access into the combustion-chamber, that it may be cleaned out at intervals, and such doors give also a convenient access for inspection of that part of the boiler. These doors will usually be of some size (perhaps 18 or 24 inches wide by 18, 24, or 36 inches high), and they will be made by building a flanged framework of cast

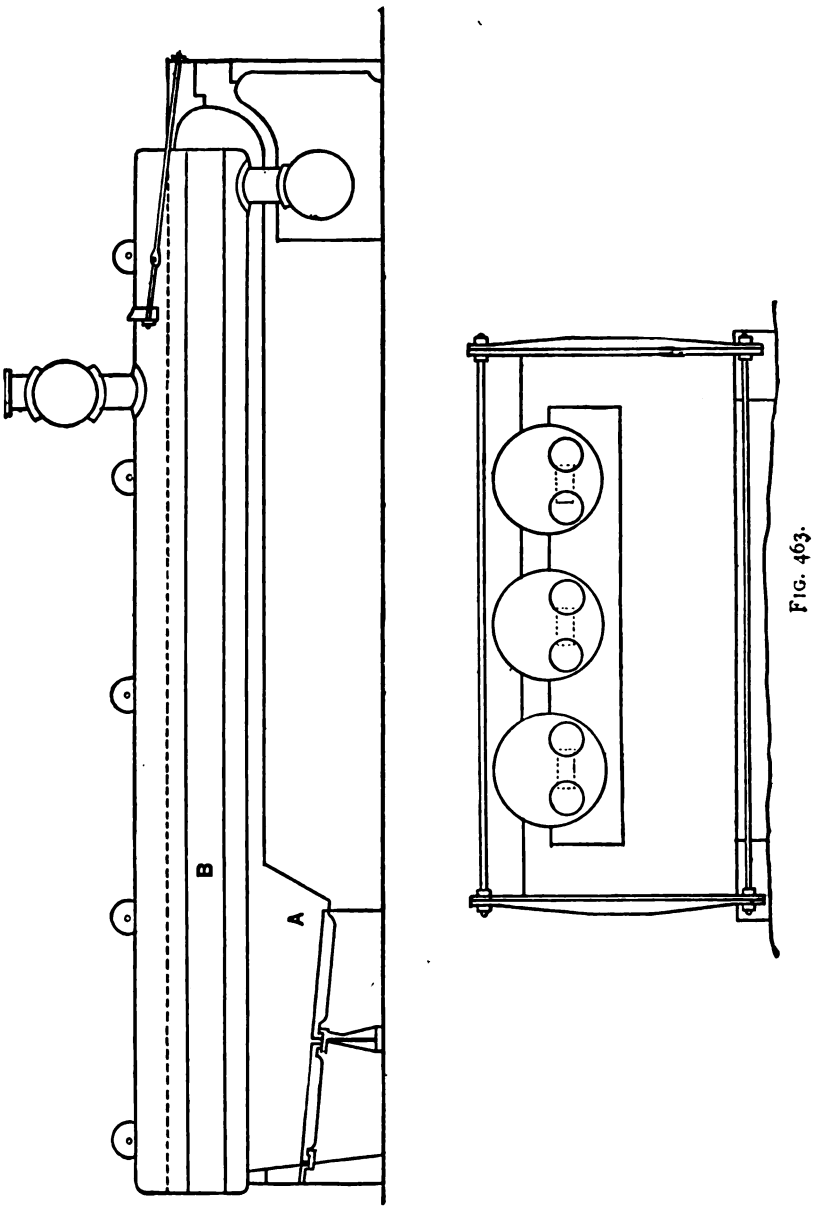

FIG. 463.

iron into the brick-work which will clasp the flange, and be supported by them while the projecting plane beyond the brick-work carries the hinges (see *H* in Fig. 443). The door-openings are objectionable, because they break the continuity of the brick wall and cracks originate from them for this reason. It would be desirable not to put them at the bottom on account of this tendency to create cracks, which are less troublesome if they are towards the top. The location of the doors in the side or back wall of the combustion-chamber must be a matter of convenience and location, but the back wall is not as good a place as the sides by reason of the effect of direct impact of flame and gases.

In sectional-boiler settings the combustion-chamber is partly filled by the boiler itself, or rather it is made from a space within the tubes. The absence of return fire-tubes in boilers of this class compels the gases to receive a circuitous path in and out among the water-tubes, and this is secured by partitions of fire-brick like hanging bridge-walls, which compel the gases to pass around them and meet complete combustion while still in contact with the tubes. It is probable that the gases will be hotter when leaving a sectional boiler than in leaving a return tubular boiler for these reasons.

279. The Back Connection.—The hot gases passing backwards underneath the shell of the boiler are to be deflected into the tubes or flues in order to come forward through them to the front. Following the analogy of the internally-fired boilers, this space at the back end of the setting in which the tube sheet comes has been called the back connection. It is apt to be about 2 feet deep, and must be roofed at the top at such a level that the flame and hot gases impinging against the back head shall not heat the surface of that head, which is not protected from overheating by water on the inside. It will be seen from examination of Figs. 436 to 462 that there are three methods for making this roof of the brick connection.

First, the roof may be made of an arch whose axis is

transverse to the setting, and of which the boiler itself shall form the keystone and take the thrust of the arch (Fig. 436).

Second, the roof may be flat, the bricks which form it being supported upon transverse bars of cast or wrought iron which rest upon the side walls and support the bricks. Cast iron is better than wrought from its resistance to softening by heat, and the usual shape is a T iron with its cross downwards, and the web of the T among and between the bricks (Fig. 442).

The third plan is to spring a very flat arch across between the side walls. The objection to this is that so flat an arch, if its rise at the centre is so little as not to uncover the water-line of the boiler, is a construction which is difficult to make, and which heat is sure to deteriorate.

If the first method is used, the back end of the boiler must be the fixed end, and expansion be from this end towards the front. The back connection must be large enough to give convenient access to the back head of the boiler for any repairs which may be called for at that point.

280. The Front Connection. — The gases which pass through the flues or tubes are to be gathered together at the front head and discharged into the stack. When the front end is not made a smoke-box it will be called the front connection. The gases should have parted with a great deal of their heat in passing through the flues or tubes, so that their volume is less, and for this reason the front connection is usually about two thirds the depth of the back connection. Sectional boilers have no front connection, but the gases pass directly from the back connection to the stack. The front connection gives access to the front head of the boiler, and the flue-doors of the boiler-front admit to it from the outside.

281. The Flue to the Chimney-stack.—When the front connection is a smoke-box in extended front settings, and in many cases of full front settings, the gases pass directly through an opening into a metallic flue which carries the products of combustion to the chimney and so to waste. If there are several boilers side by side or in a battery, short

lengths of flue from each front connection or smoke-box will unite them to a larger flue increasing in size as additional quantities of gas are discharged into it, and through this common flue they pass into the chimney (Fig. 464).

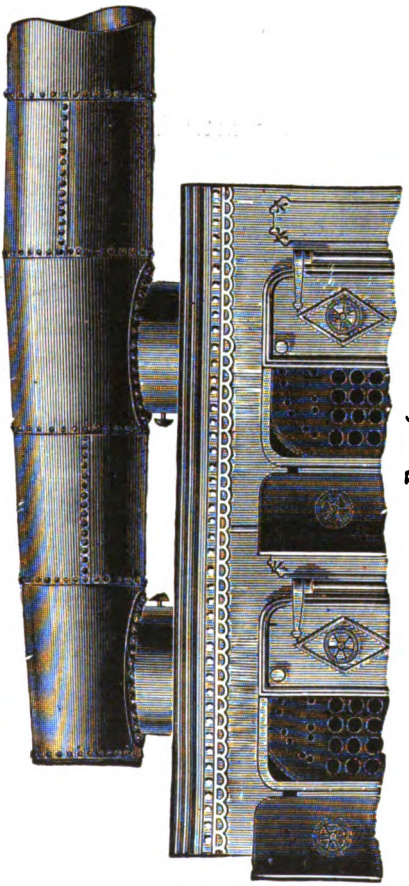

FIG. 464.

When the chimney is at the back of the setting a customary arrangement has been to carry the gases to the rear in a flue formed by springing an arch over the top of the boiler from side wall to side wall. The tie-rods and buck-stays withstand the thrust of this arch, and from the space

thus formed the gases pass to the chimney. Fig. 436 shows this arrangement clearly.

It offers the following advantages:

(1) Radiation is diminished from the top and the boiler is kept warm by its own gases.

(2) If these gases are hot enough, they have a tendency to dry or even slightly to superheat the steam in the steam-space and in the dome.

The objections to this construction are:

(4) It is of small value as a superheating appliance, because shortly after starting the boiler is thoroughly covered with a coating of fine ashes or dust which is practically a non-conductor.

(5) It is difficult to construct the opening through which the dome of the boiler must protrude, and the expansion of the boiler in the brickwork opens cracks for leakage of air into the flue.

When, however, the chimney must of necessity be at the rear of the setting of such boilers, these difficulties can be avoided sufficiently well to make it a justifiable feature of the setting. It should be large enough to permit the access of a man for inspection.

Where it is not used, the top of the boiler will be covered with some non-conducting material laid on in sections which shall permit their removal for inspection. These non-conducting coverings catch and hold any water of leakage, and unless care is taken may occasion external corrosion.

282. The Damper and Damper-regulator.—In order to control the action of the chimney, which depends on the weight of a column of air outside of it, a valve of some sort is required in the flue from the boiler. When closed wholly or in part it causes a friction in the discharge of the gases through it, which checks the flow of air through the fire.

It is usually made in one of two forms. The sliding or guillotine damper is a flat plate sliding in grooves across a frame in the flue (Fig. 436). The pivoted or balanced damper is a plate mounted upon an axis through its centre of

gravity by which it can be turned so as to stand edgewise to the flow of gas, opposing little resistance, or flatwise to it so as to close the opening altogether. The sliding damper

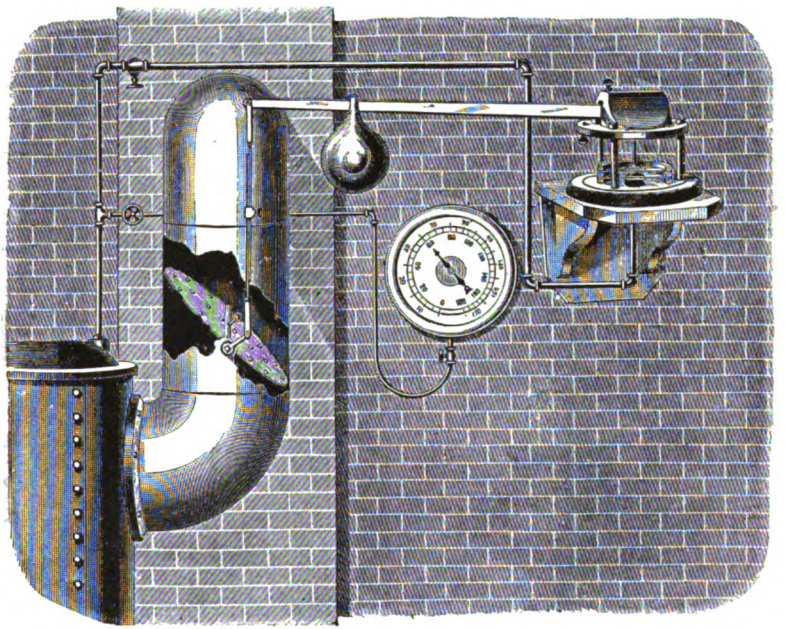

FIG. 465

usually is the harder to move, and if it slides vertically has to be counterweighted in order to be balanced. The other form is in equilibrium in any position. The damper is often arranged not to close entirely even when it is nominally shut, in order that there may still be a tendency for a current to be maintained inwards through the setting, and out through the stack to prevent undesired gases from getting into the boiler-room because access to the chimney is closed.

Since the chimney is the immediate and usual method of controlling the fire, it becomes exceedingly simple to make it automatic, so that the fire shall be somewhat self-regulating. The pressure of steam can be brought against a piston, and the motion caused by that pressure can be resisted by a weight or spring. When the pressure exceeds the normal, the

weight will be overcome; when it falls below the normal, the fall of the weight will move the piston the other way. The motion of the piston, which can also be made a diaphragm of flexible metal, can be attached to the damper so as to close or open it when the pressure rises or falls. This may be done either directly, as in some of the older forms of damper-regulation (Fig. 465), or the steam-pressure may move a valve to

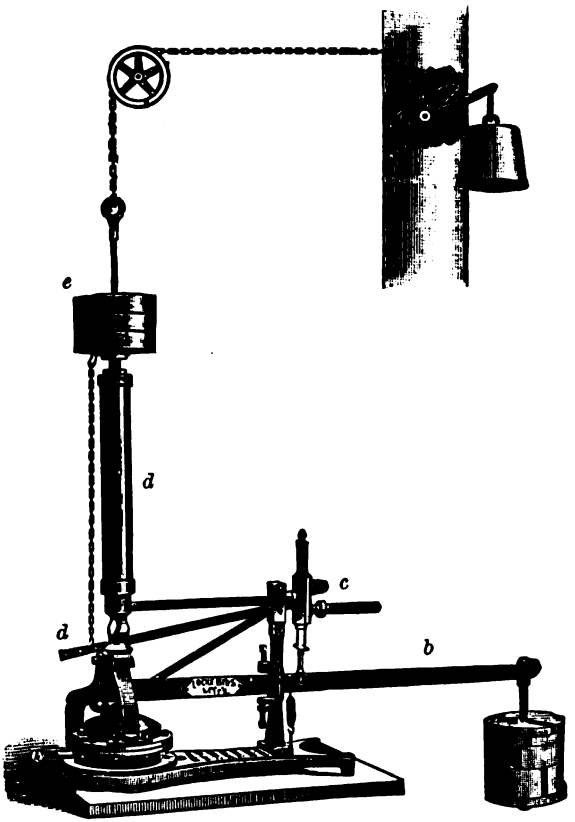

FIG. 466.

admit the pressure which operates the damper, upon one side or another, of the mechanism which moves the latter (Fig. 466). This may be the water-pressure of the city mains, or

it may be the pressure from the boiler of the steam or water in the boiler itself.

283. The Chimney.—The chimney is a thermodynamic machine for producing the movement of gas within it on the principle of an inverted siphon, whose long leg is the heavy column of cold air outside of the chimney-stack, and whose short leg is the column of warm light air within it. While these columns are of the same length, they are of unequal weight by reason of the difference of the weight of each cubic foot which results from the difference in temperature. It will be aside from the present purpose to discuss the chimney theory, but practice seems to agree that a cross-section of one eighth of the grate-area is about the proper size, which leaves the height of the chimney the quantity to be determined. Practical conditions in cities often fix this limit independent of theory and rational design, and a formula which has been found to correspond very closely with conditions which have proved satisfactory is as follows:

$$E = \frac{0.3 \cdot \text{H. P.}}{\sqrt{H}}.$$

In this E denotes the effective area, and is equal to the net area, $A - \frac{6}{10}$ of the square root of itself, or $E = A - 0.6\sqrt{A}$. This is apparent by assuming that the friction of the gases in the chimney withdraws from the total area a narrow edge having a depth of 2 inches in a radial direction.

The discussion of chimney-foundations and their stability against wind belongs to another branch of the subject.

The construction of chimneys may be of three types. First, brick, round or square; second, of wrought iron or steel plate with a brick lining in whole or in part; and third, a simple plate-iron stack unlined. The round brick stack is lighter than the square stack, and is less affected by wind-pressure. It is also in most designs more pleasing to the eye. The form of stack with a ground-plan resembling a star has been much used in certain parts of the country, and offers the stability given by such buttressed construction. The iron or

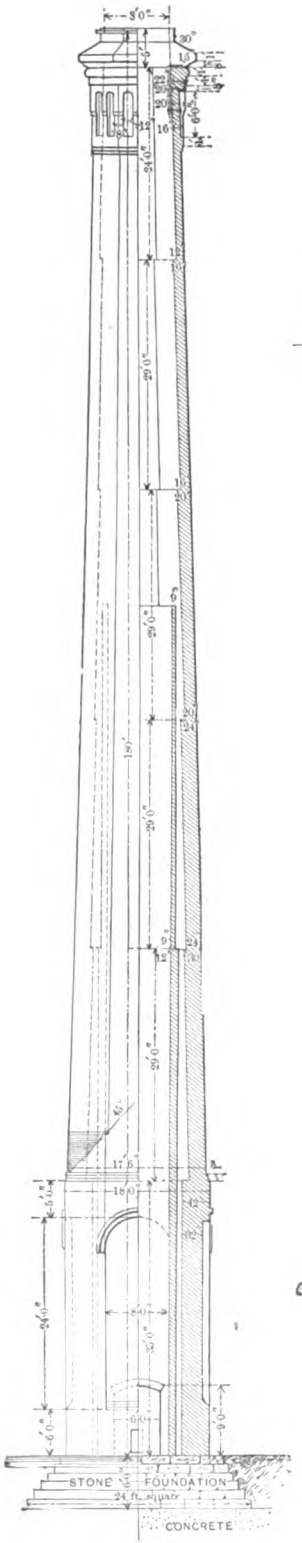

FIG. 467.

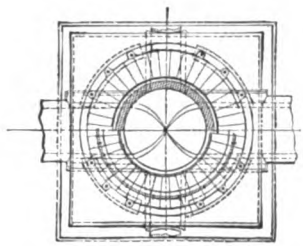

FIG. 468*c*.

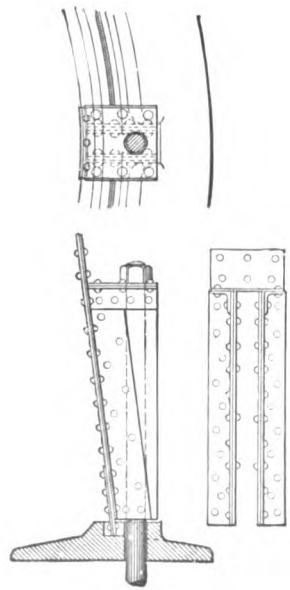

FIG. 468*a*.

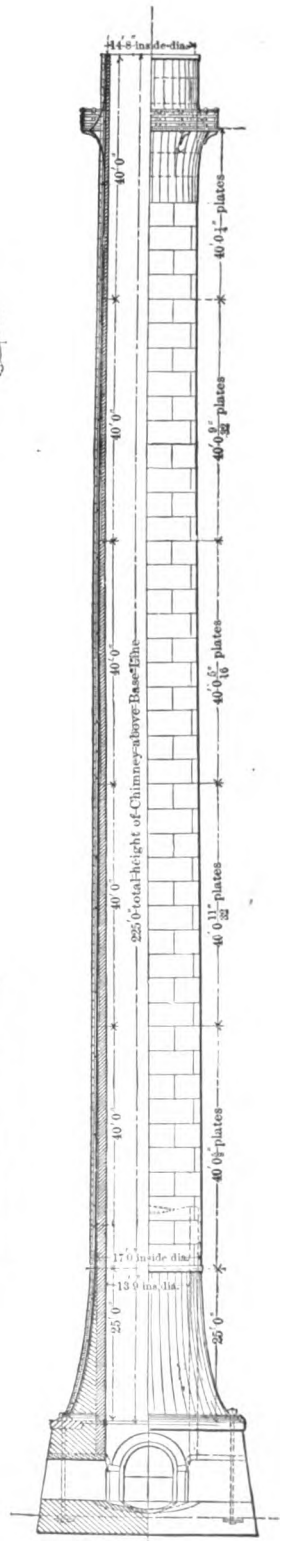

FIG. 468*b*.

steel stack is more efficient in cold climates by reason of permitting less infiltration of air, and it can be constructed by use of proper anchor-bolts so as to need nothing to stay it against the wind. The iron shell without the weight of the lining will be required to be guided or stayed, and special care is to be taken that one of the four or six wire-rope guys should be in the direction of the strongest prevailing wind. Such guys should be attached two thirds of the distance up the chimney.

Access should be permitted to the chimney at its base through a proper door either in the flue or in the foundation of the chimney, and it is best that a ladder on the outside of the chimney should give access to its top. In a square chimney this ladder can be made by bars let into two walls at a corner inside. The top of the chimney is exposed to action by frost and snow, which throws down the brickwork at the top, and forms a reason why the best results are attained by building the chimney with a metallic or stone covering, so as to prevent moisture from getting into the joints. Figs. 467 and 468 show chimney constructions and the proportions which have been found satisfactory, according to which the thickness may be reduced as the chimney attains height.

284. Artificial Draft.—Since the chimney is a machine or appliance for putting air in motion through the grate, setting and flues and the chimney itself, that same result can be attained by mechanical means. A calculation of efficiencies shows that for heights of chimneys such as are ordinarily used the mechanical methods of securing draft are the more efficient, so that it becomes a question of consideration whether the necessary air for combustion shall be furnished by a costly chimney or group of them, or by a continuously running machine of some selected type.

Artificial draft can be secured by two general methods. The first type is that made familiar in locomotive practice, in which a rapid motion is given to the air to draw it out of the smoke-box so that the reduction of pressure within the latter shall cause a flow through the grates, fire, and tubes to equalize this rarefaction. The other plan is to

cause a pressure of air in the ash-pit below the grate-bars so that the air will flow up through the fire, the setting, and flues by the excess of pressure which prevails in the ash-pit. This is called the forced-draft system, and is usual in high-speed marine practice. The movement of the air can be produced either by means of a steam-jet inducing a current of air to flow, or fans or blowers either of the centrifugal or positive type may be used. If the first or aspirating principle is used, the products of combustion must pass over the aspirating appliance. These gases are hot and possibly corrosive. The heat makes lubrication difficult, and almost excludes the use of apparatus where lubrication must be provided unless all bearing-surfaces can be without the flues which carry the gas. Protection against corrosion can be secured if proper trouble is taken, but where this is not guarded against the apparatus deteriorates rapidly. The forcing system has the fresh cool air pass through the forcing appliance, and has furthermore the advantage of maintaining a higher tension within the setting than prevails outside of it, so that there is little or no tendency for cool air to leak through cracks or porous brick-work into the gas-currents. This is a difficulty present where the draft is done by aspiration. On the other hand, the pressure system makes a hot and gassy fire-room if there are places where gas can escape through cracks or elsewhere from within the setting into the room. Since combustion is more efficient the denser the air used to effect it, the pressure system offers an advantage from this point of view, as compared with natural draft or the aspiration system.

285. Advantages of Artificial Draft.—It is to be said in favor of natural or chimney draft that, when the chimney is once built and paid for, the draft-machine costs nothing to run except the heat which is used for this purpose, and it undergoes little or no deterioration with use. Furthermore, in cities the necessities imposed upon the power plant to carry the products of combustion high enough up to create no nuisance in its neighborhood compel a height and cost of chimney which make the consideration of artificial draft

unnecessary, since the high chimney must be there in any case. Again, where the plant is so large that the cost of the draft-machine becomes considerable, or, what is the same thing, the cost of the expensive chimney becomes distributed over a large number of horse-power units, the advantages of artificial draft are not so apparent.

Artificial draft, on the other hand, offers the following advantages:

(1) The rapidity of combustion in the fire-box is not limited by atmospheric conditions.

(2) It is possible to increase the evaporative capacity of a given plant without other change than the velocity of the draft-machine. This increase may be either permanent or to meet sudden demands for steam, such as occur in street-railway practice at busy hours. With natural draft the chimney must be designed to meet the maximum requirement, and will be partly shut off at other times.

(3) It is possible to burn inferior, cheaper, and smaller sizes of fuel with artificial draft, because a high pressure can be maintained which will force the necessary air through a compact body of fuel.

(4) Where high stacks are not made necessary the cost which they entail is avoided, or is offset by a less cost of the draft-machine.

286. Disadvantages of Artificial Draft.—The objections to be raised against the artificial draft are:

(1) The running cost of the machine. While it takes less coal than the chimney to do a given work, the fuel is not the only expense where an engine must be run consuming oil and other supplies, and calling for repairs and supervision.

(2) The artificial-draft machine occupies space which can often be ill spared.

(3) Running machinery, and particularly that at high speed such as most draft appliances demand, is rarely silent, is often noisy, and is liable to breakdowns which compel it to stop.

It will be seen that chimney-draft is not liable to these disadvantages.

The machine for causing the draft may be a centrifugal fan driven either by its own directly-coupled engine, or by a detached engine, or a revolving shaft, or by means of an electrical motor. The positive blowers will be driven by belts or engine, whether used for pressure or suction methods, and the steam-jet, which is the third appliance, requires no moving machinery when used in either system. It will be seen that each of these offers some advantages and disadvantages of its own. The fan method, if driven by belting, increases the running cost; and if electric current must be generated, the cost of its transformation must be considered. The steam-jet plan occupies very little space, and is cheap to buy in the first instance. It is, however, wasteful of steam as compared with the other systems, and is in most cases too noisy. If used as a forcing system, the steam passes through the fire and is objectionable. If used as a suction system, the steam goes out with the products of combustion and does no harm.

The artifical-draft system is a feature of the automatic stoker shown in Fig. 453 and in some others, and it offers the advantage that the steam-pressure can be made to act upon the draft machinery directly and produce a more prompt and efficient effect upon it than when that pressure acts upon the chimney only and through a damper-regulator (par. 282). The fall of pressure in natural draft can only open the chimney wide and attain at best the full effect of the entire chimney. By acting on the machinery of artificial draft the fall of pressure can be made to stimulate combustion above the normal rate, and with great promptness.

CHAPTER XXV.

THE BOILER-FURNACE AS THE ORIGIN OF POWER.

287. Calorific Power of the Fuel.—It has been said (par. 270) that the boiler-furnace and its design condition every other detail of the power plant, because here the energy stored in the fuel is liberated in the form of heat generated by combustion. This heat is transferred to the metal of the boiler and to the water within it, and appears in the form of a tension or pressure of the steam-gas which is used to drive the piston in the engine. It is obvious, therefore, that the number of units of heat resident in a unit of weight of the fuel burned in the furnace measures the capacity of that furnace for furnishing power to the engine. In British units the calorific power of a fuel is the number of pounds of water which will be raised one degree Fahrenheit by the burning of one pound of the fuel. The values of different fuels for power purposes will therefore depend upon their calorific power. This calorific power may be determined theoretically by means of an analysis which shall give the weight of carbon and hydrogen present in each pound, but a more satisfactory determination is that made by an instrument, called a calorimeter, in which coal is burned in such a way that all the heat given off in combustion is caught and measured. It will be obvious that a given weight of a fuel containing a considerable percentage of incombustible matter or ash will not be able to evaporate as much water as one which has nearer 100 per cent of combustible. The following table presents accepted general values for the calorific power of various fuels.

TABLE SHOWING THE COMPOSITION AND CALORIFIC POWER OF VARIOUS COMBUSTIBLES—THE QUANTITY OF OXYGEN AND AIR NECESSARY FOR COMBUSTION—AND THE VOLUME OF THE PRODUCTS OF COMBUSTION OF 1 LB. OF COMBUSTIBLE. (From MORIN and TRESCA.)

Name of Combustible.	Composition.				Calorific Power.	Weight of Oxygen necessary for Combustion.	Weight of Air necessary for Combustion.	Volume of Air corresponding in Cubic Feet.	Volume of Products in Cubic Feet.
	C	H	Volatile Matter.	Ashes.					
Carbon	1.00	....	....	....	14,400	2.66	11.29	137.6	137.6
Anthracite coal	0.90	0.03	0.03	0.04	13,500	2.64	11.21	138.9	136.2
Bituminous coal	0.85	0.05	0.06	0.06	14,400	2.66	11.29	139.6	140.1
Lignite	0.70	0.05	0.20	0.05	11,700	2.26	9.69	120.2	116.3
Peat	0.55	0.05	0.30	0.10	9,000	1.86	7.90	97.9	102.1
Peat 0.20 water	0.39	0.04	0.50	0.07	7,200	1.49	6.32	78.3	81.5
Coke	0.85	0.05	....	0.10	12,600	2.26	9.69	120.2	116.9
Peat-charcoal	0.82	....	....	0.18	9,000	2.18	9.25	114.5	112.7
Dry wood	0.48	0.06	0.05	0.01	7,200	1.75	7.43	91.9	89.2
Wood 0.20 water	0.40	0.05	0.25	0.01	5,400	1.40	5.94	73.5	71.8
Wood-charcoal	0.80	....	0.04	0.07	10,800	1.86	7.90	97.9	96.3
Hydrogen	....	1.00	....	....	62,000	8.00	33.97	420.6	475.4
Carbonic oxide	0.43	....	0.57	....	4,320	0.57	2.42	29.9	35.6
Illuminating-gas	0.62	0.21	0.17	....	18,000	2.64	11.22	136.3	176.7
Gas from blast-furnace	0.06	0.02	0.92	....	1,620	0.23	0.99	12.2	30.3

288. Force Corresponding to the Combustion of One Pound of Fuel.—If the same British units be used, it will be apparent that the foot-pounds of energy resident in any fuel will be the product of the calorific power above given multiplied by the number of foot-pounds which correspond to a unit of heat.

It will be recalled from Chapter I that the accepted value for this number is 778. If the product then of the calorific power by 778, giving a total in foot-pounds, be divided by the number of foot-pounds corresponding to a horse-power, or 33,000, the quotient will be the horse-power theoretically resident in a pound of fuel. It is, however, impossible to realize all the heat in the coal, for several practical reasons.

(1) Some of the heat has to be wasted so far as steam-making is concerned, in order to create an upward draft in the chimney at a velocity sufficient to maintain combustion in the fire.

(2) A portion of heat is consumed in raising the temperature of the air which passes through the fire, for combustion and for dilution, and the greatest waste is that caused in bringing the inert nitrogen of the atmosphere to the temperature of the hot gases.

(3) The ash or incombustible mineral matter in the coal is heated, and what goes off in this way is wasted.

(4) In externally-fired boilers, set in brick, there is a loss and waste by the radiation from the setting and by conduction.

(5) Where combustion is incomplete so that the combustible gas or smoke is allowed to escape past the heating-surface of the boiler from bad design or bad management, just so much valuable heat is wasted.

(6) Transfer of heat is not perfect.

It is apparent that these losses are furnace-losses and have nothing to do with the further series of losses caused by the use of steam as a vehicle to carry the heat into the engine-cylinder. Instead, therefore, of being able to get a horse-power with about two-tenths of a pound of coal as the theo-

retical calculation above made would indicate, the best results of practice give the horse-power with 1.25 pounds of coal, and from this superior figure the less satisfactory performance of uneconomical plants brings the figure up to 3 or even 5 pounds of coal to the horse-power per hour.

289. Heat of Combustion in the Furnace.—The definition of calorific power given above gives a value which is independent of the time required or given for the combustion to take place. In actual practice, however, the temperature prevalent in the furnace is entirely dependent upon the rapidity with which the combustion takes place. With a high rate of combustion the fire is hotter than when the fuel burns slowly, and theory and practice both indicate that the best results will be obtained, other things being equal, when the temperature is very high in the fire, provided that sufficient heating-surface be present in the boiler to cool the gases in contact with it before they leave the setting. These conditions of intense combustion and high temperature are those which belong to the conditions of forced draft, and point to the necessity for very extended heating-surface where forced draft is to be used. If the gases go off hotter than they ought to be when they leave the setting, heat is being wasted which ought to have been caught and used to make steam or heat the water. The element of time, furthermore, is of importance in a practical way, because any given weight of gas carries a certain number of heat-units through the gas-flues in the setting, and if this gas does not meet condensing-surface enough to be cooled, its full capacity to evaporate water is not used.

290. Pounds of Coal Burned per Square Foot of Grate.—It is customary to state the intensity of combustion which measures the temperature of combustion, using as a unit the pounds of coal burned per square foot of grate-surface per hour. This measures the quantity of coal which will be charged into the furnace by the fireman, and, when taken in connection with the calorific power of the fuel, measures the horse-power or work-units which each furnace will furnish.

It is apparent that the intensity of the draft measuring the quantity of air supplied for combustion exerts a vital influence on the coal which will be burned each hour, and furthermore that this is a question of practice and experience.

The following table gives the accepted rates of combustion per square foot of grate as derived from observation of English practice, and are reliable data to start from.

RATES OF COMBUSTION.

With chimney draught:	Pounds per Square Foot per Hour.
Slowest rate, Cornish boilers	4 to 6
Ordinary rate, Cornish boilers	10 to 15
Ordinary rate, factory boilers	12 to 18
Ordinary rate, marine boilers	15 to 25
Quickest rate for anthracite coal	15 to 20
Quickest rate for bituminous coal	20 to 25
With forced draught:	
Locomotives	40 to 100
Torpedo boats	60 to 125

The following table, prepared from careful collation of French experience by Morin and Tresca and first published by the late W. P. Trowbridge, indicates the rapidity of combustion which is to be expected with chimneys of the height

Heights of Chimneys in Feet.	Pounds of Coal per Square Foot of Section of Chimney per Hour.	Pounds of Coal per Square Foot of Grate per Hour.
20	60	7.5
25	68	8.5
30	76	9.5
35	84	10.5
40	93	11.6
50	105	13 1
60	116	14.5
70	126	15.8
80	135	16.9
90	144	18.0
100	152	19.0
110	160	20.0

given. This table also is of interest in connection with the design of chimneys, if it is desired to start with the combustion of a given weight of coal (par. 283).

It must be recognized that these data are approximate, since the kind of coal, its percentage of ash, and the skill of the fireman are quantities which will produce great variation in figures of this sort.

291. Pounds of Water per Pound of Coal Burned.— Since the steam-engine to be served by a boiler is to be supplied with a given weight of steam per hour to fill the volume of the cylinder a certain number of times per minute and per hour, the practical question as to the effectiveness of the furnace takes the form of the number of pounds of water which it will evaporate per hour. This is affected both by the temperature at which the water is admitted to the boiler and by the pressure with which it is withdrawn from the engine as steam. The duty of the coal is, first, to heat the water from the temperature of its admission as feed-water to the temperature at which water stands at the working pressure when making steam. Secondly, it must furnish the amount of heat-units required to transform water at that temperature and pressure into steam at the same pressure; and thirdly, it must do the external work of expanding the water into the much greater volume which it will occupy as steam.

It is the function of steam-tables to give the total quantity of heat which belongs to steam at different pressures; but it will be apparent that if the calorific power in heat-units of any fuel be divided by the heat-units resident in a pound of steam at the pressure in question, the quotient will be the number of pounds of water which can be evaporated theoretically by one pound of coal having the given calorific power. A calculation made on this basis with the foregoing calorific powers indicates that rarely will a fuel be found which will evaporate over 15 pounds of water per pound of coal, and, furthermore, practice with the limitations imposed makes it very unusual to reach 12 pounds of water per pound of coal. Ten pounds

is excellent practice, and 7 pounds would be a more usual experience in most places.

292. Pounds of Water per Horse-power per Hour.— Since the capacity of the steam-engine for doing work is measured by the amount of heat which it will receive from the fire through the water and steam, it is apparent that the higher the pressure of the steam which enters the cylinder, the more power it will receive for a given weight of steam furnished to it. This explains the increasing use of high-pressure steam, and will explain also the diminishing weight of water which is required to furnish a horse-power in the engine-cylinder. The old figure of James Watt's period was a cubic foot of water, or 62½ pounds of water, per horse-power per hour. The standard which was introduced first at the tests made in 1876, at the Centennial Exhibition, was that an engine of that period should give a horse-power with 30 pounds of water, and from that standard what has been called the horse-power of the boiler was derived, which has a certain present acceptance. The boiler horse-power is to be defined as the ability to evaporate 30 pounds of water received in the boiler at a temperature of 100° Fahr. into steam at 70 pounds pressure above the atmosphere under ordinary conditions of use and practice. The quantity of heat demanded to evaporate a pound of water under these conditions is 1110.2 British thermal units. This is the same as 34½ pounds of water evaporated into steam at that temperature from a feed-temperature of 212° Fahr. Improvements in the steam-engine, added to the use of higher pressures and better construction, make this allowance of 30 pounds per hour per horse-power unnecessarily large for economical engines and of large size. Recent improvements show that the horse-power can be obtained with considerably less than half that weight of water, and designers are aiming to get an engine which shall give a horse-power with 13 pounds for prevailing pressures, and less with the use of unusually high pressures. The following table gives certain figures from test and experiment:

b	*e*	*f*	*e*	*f*	
Type of Engine.	Feed Water per Indicated Horse-power per Hour.				
	Non-condensing.		Condensing.		Per Cent Gained by Condensing
Name.	Probable Limits.	Assumed for Comparison.	Probable Limits.	Assumed for Comparison.	
	lbs.	lbs.	lbs.	lbs.	
Simple high-speed.....	35 to 26	33	25 to 19	22	33
Simple low-speed.....	32 to 24	29	24 to 18	20	31
Compound high-speed....	30 to 22	26	24 to 16	20	23
Compound low-speed.....	.....	*	20 to 12⅞	18	25
Triple high-speed	27 to 21	24	23 to 14	17	29
Triple low-speed.....	.....	....	18 to 12⅞	16	....

* The table does not give a water rate for the compound low-speed non-condensing engine, but it may be fairly assumed to be about the same as for the triple high-speed non-condensing engine, namely, 24 pounds. This will make the gain by condensation just twenty-five per cent.

The terms "high speed" and "low speed" refer to the number of revolutions per minute, and not to the piston-travel. Low-speed engines are Corliss engines and the like, with releasing cut-offs, and have a rotative speed usually less than 120 revolutions per minute.

293. Transfer of Heat.—The heat generated in the boiler-furnace is to be absorbed first by the metal of the heating-surface, and conducted by the latter to the water which it contains. The heat of the fire can be transferred to the metal of the boiler by radiation and by contact. Radiation is the most effective method of transferring heat, and is the method when solid and incandescent matter is so placed relatively to the heating-surface that waves of heat-motion from the hot body strike the cooler body and are absorbed by it. Contact is the method of transfer from a hot, but not glowing, gas which touches the surface of the cooler body and imparts its heat by such contact. The solid matter glowing in the current of the gas makes a flame, and such flame heats by radiation. When the combustion is complete the gas becomes non-luminous, and its heat must be absorbed by contact. Short-flame fuels heat by radiation from the solid matter in the fire-box, but by contact entirely behind this point. It is the flaming capacity of soft coal which gives it its value as a

steam-making coal; but if used with tubes so small as to extinguish the flame before combustion of the carbon particles is complete, some of its effect is lost.

When the heat is absorbed by the heating-surface, and conducted to the water, the latter receives and transfers the heat throughout its body by convection. Currents of descending cold water and ascending warm water carry the heat received at the heating-surface up through those parts of the water which are not in contact with the shell. The importance of circulation, which measures the rapidity of this process, is thus apparent. The effect of the thickness of the plate of the heating-surface becomes apparent when it is considered that all transfer of heat is rapid and efficient in proportion as the difference of temperature is great between the heated and the cold body. If the conducting metal is thick, the water does not cool the outer surface so efficiently, and therefore it does not withdraw the heat from the gases or the flame as efficiently during the period in which the flame or gas is acting upon the water.

294. **Ratio of Grate-surface to Heating-surface.**—It will be apparent that the heating-surface, which is the absorbing surface of the boiler, should be proportioned with respect to the initial temperature of the fire, which is dependent upon the draft, and also with respect to the fuel to be used, and with respect to the dependence mainly upon radiation or contact for transfer.

It will further be apparent that this ratio should vary with the type of boiler and the arrangement and relative efficiency of the heating-surface for absorbing heat. The making of boilers as a business, and often in ignorance of the exact conditions in which they are to be used, has resulted in a certain accepted ratio between the grate-surface, which measures the total amount of heat supplied to a boiler, and the heating-surface by which that heat is to be absorbed. The following table presents accepted relations between these quantities:

RATIO OF GRATE-SURFACE TO HEATING-SURFACE.

Marine return-tube boilers	1 : 25 to 1 : 38
Marine return-tube boilers, average of a large number of boilers	1 : 30
Lancashire boilers	1 : 26 to 1 : 33
Cornish boilers	1 : 27 to 1 : 34
Boilers of modified locomotive type	1 : 30 to 1 : 34
Yacht boilers, locomotive type	1 : 40 to 1 : 46
Horizontal internally-fired cylindrical multitubular boilers	1 : 45 to 1 : 50
Portable boilers, locomotive type	1 : 23 to 1 : 70
Water-tube boilers	1 : 34 to 1 : 65
Locomotive boilers	1 : 60 to 1 : 70

It is usual to consider that the entire area of the fire-tubes and flues is available for heating, although there is no question that their upper surfaces are the more efficient. The lower surfaces of horizontal water-tubes are more efficient from a like reasoning, and the front sides of vertical water-tubes.

In boilers of the internally-fired type, and particularly in those of the locomotive class, the withdrawal of heat from the gases by the tubes is very much more rapid at the first end at which they enter than towards the end at which they leave. Experiments have been made by dividing the boiler into sections with proper diaphragms and measuring the evaporation in these several sections. The following table indicates how much more efficient the sections nearest the fire-box prove themselves to be:

Section number		1	2	3	4	5	6
Percentage of evaporation	Test No. 1	47	23	14	8	5	3
	" " 2	65	29	16	13	10	

295. Evaporation per Square Foot of Heating-surface.—The experience of boiler-designers shows that for maximum economy a boiler should be proportioned to have one square foot of heating-surface to every three pounds of water to be evaporated into steam at atmospheric temperature from a feed-water temperature of 212° Fahr. This is the basis for the usual figure of 11½ to 12 square feet of heating-surface per horse-power. This must be taken, of course, as an aver-

age figure and as corresponding to ordinary conditions, and susceptible of being modified with higher furnace-temperature and any other variables.

296. Pounds of Air Required per Pound of Coal.—It is usual to consider that a furnace-temperature caused by combustion is to be theoretically calculated by finding the relation between the calorific power of coal and the absorptive capacity for heat of the products of combustion. When, therefore, unnecessary amounts of air are introduced through the fire or above it, their tendency is to lower the furnace-temperature, and it becomes desirable to know what is the least weight of air which will secure complete combustion. This is found by finding the weight of oxygen required to combine chemically with the carbon of the fuel, according to their atomic weights, and then to find the weight of air which contains this weight of oxygen. The calculation shows that a pound of carbon requires 2.66 pounds of oxygen, and this makes the volume of air necessary to burn one pound of carbon to be 140 cubic feet at 32° Fahr., which is equivalent to 11.3 pounds of air, which is usually called 12. Much more than this is demanded, however, because the carbonic acid, which is the resulting product of combustion, is not a supporter of such combustion, but must be diluted with at least half as much again or twice as much free air in order that combustion may be maintained. With a fuel containing hydrogen a larger volume of air is required from the greater weight of oxygen called for, and this explains the greater volume of air which hydrogen demands for its complete combustion. It is an advantage of forced draft that it makes less important this diluting excess of air, and consequently favors maintaining a high temperature in the furnace.

297. Oil as Fuel.—The exceeding convenience of petroleum in some of its forms as a fuel which can be mechanically handled with ease, and which has a high calorific power, has induced experiments in its use. The usual method is to supply it in a state of vapor in which the finely divided particles of the oil are drawn into the furnace-area by the prin-

ciple of induced currents. High-pressure air or steam passing through annular openings draws the oil up and finely divides it into a spray, and the mixture of oil and air or oil and steam is ignited within the fire-box. Intense combustion follows, so much so that it is often found that it will not answer to let the flame impinge directly upon the heating-surfaces, as it erodes them away. The impact of the flame-current is usually received upon fire-brick or similar refractory material, which becomes white-hot and serves to insure ignition of the oil-vapor and a high temperature of the air used for combustion. The oil used is either the crude petroleum as it comes from the oil-well, or it is the product known as fuel-oil, which is the residue after the lighter elements of petroleum have been removed by distillation. The naphtha, gasoline, and kerosene are removed by a fractional distillation, and the less volatile residue is used to burn.

298. Advantages of Boiler-firing with Oil.—The use of oil as a fuel under steam-boilers offers the following advantages:

(1) Oil has usually a higher calorific power than solid coal, and consequently more evaporation can be gotten from a given boiler.

(2) Oil being a liquid is handled mechanically and offers all the advantages of mechanical stoking with the simplest machinery and with no grates.

(3) Oil has no ashes with the labor incident to their removal, and the possible expense in many places. It sometimes leaves a residue, however.

(4) The fire can be controlled instantly from its maximum intensity down to nothing by cutting off the supply, and a full fire can be started at once as soon as the oil is turned on. This adapts oil-firing for locomotive practice, and for any place where wide variations occur in the demand for steam. With solid-fuel firing, when the coal has once been charged into the furnace it must burn itself out.

(5) The combustion can be made practically perfect, and therefore smokeless.

(6) The liquid fuel gives off no sparks of solid burning material to be pushed through the stack to fall on combustible material and set fire to it.

(7) The mechanical stoking feature reduces the labor cost for firing, and makes the fire-room work that of supervision and attendance.

(8) It makes no dust.

(9) Its smokeless combustion has a significance for war-vessels, since it enables them to move without betraying their presence, if out of sight below the horizon.

(10) The operation of taking on fuel, and the storage of fuel at storage stations, is simplified and cheapened.

(11) From the less frequent opening of the fire-door, and the maintenance of a constant temperature in the fire-box, it lasts longer and the cost of repairs is diminished. This is also of advantage to the boiler itself.

(12) There is no loss of fuel in banking fires between the times that steam is needed, nor losses from fuel in the ash-pit.

299. Disadvantages of Firing with Oil.—There are certain objections to the use of oil which have prevented its general adoption.

(1) The use of crude oil with the volatile elements still remaining in it is prevented by city ordinances or fire departments in many places. In others the fire restrictions compel special methods for holding the supply of oil which are sometimes inconvenient to comply with. The oil must be below ground and so placed that it cannot flow out of its reservoir in case of conflagration and carry destruction to other buildings.

(2) The crude oil has an offensive odor, and its use is prevented by the health boards of certain cities for this reason.

(3) The vapor which escapes from crude oil forms an inflammable or explosive mixture with air.

These considerations prevent or restrict the use of crude oil, and compel the use of fuel-oil as the form in which oil firing shall be possible. As the result of this—

(4) It happens usually that oil-firing is costly as compared with coal.

(5) The supply of oil of the entire world would scarcely be adequate to meet the consumption of fuel by the railway corporations of America, to say nothing of the stationary plants.

(6) Most of the burners make a roaring noise which is objectionable in many places.

(7) The heating-surfaces of the boiler are apt to become coated with a deposit which is the residue of incombustible matter in the oil.

(8) The difficulty which is caused by a tendency of the oil to creep past stop-valves and make a leakage which is annoying and sometimes dangerous.

(9) The necessity for an auxiliary apparatus either to start the oil-fire, or to maintain it, or both. If the oil is vaporized and carried by air, an air-pump must be driven by the boiler itself to supply compressed air, and in starting this must be furnished by an independent apparatus. If steam induces the current of oil, an auxiliary or donkey boiler must be started by coal to give the necessary pressure. With respect to the use of steam or air, the latter offers the disadvantage of extra machinery, but has the advantage of supplying a material which is a supporter of combustion. The air, on the other hand, is cool, while the steam is hot.

It would seem, therefore, that oil-firing, while possessing many advantages, is not at present commercially practicable in most instances.

300. **Gas as Fuel.**—Where natural gas can be brought to the boiler-furnace to be burned as fuel, or where the manufacture of combustible gas is incidental to the industrial process, as in iron-making, or where gas can be furnished at a low rate by direct manufacture, it offers many of the same advantages in boiler-firing as are offered by oil, and it avoids all the disadvantages.

The objection to firing all boilers by gas is, first, that the radiant heat of the burning fuel in the fire-box is lost to the boiler if the gas is made outside or in a separate process. The second difficulty is that most boiler-settings are not

adapted for gas-firing by reason of the necessity for keeping the temperature of the gases up to the point of ignition so as to secure complete combustion, while the business of the boiler is to cool them down as quickly and as far as possible so as to withdraw their heat and store it in the water.

A fuel-gas with low illuminating power can be made for boiler purposes either in a gas-producer which shall supply all gas needed from a central point, or each boiler or battery of boilers may have its own small producer, or each boiler may be made into a gas-producer which shall burn the gas under the boiler proper as it is formed in the fire-box. This latter method underlies many forms of setting which have been found successful for the burning of the soft and the gaseous coals. Fig. 469 shows a boiler-setting of this general type, in which the fire-box is a fire-brick chamber in front of the boiler itself, and the gases distilled in the fire-box are heated by it to an ignition-point and are then discharged into the boiler-setting proper to impart their heat through the boiler. A condition of almost this same sort is present when sawdust is to be burned, or any similar material whose fine state of division makes it form combustible gas with great rapidity. The best results are obtained by withdrawing the heating-surface entirely from the space where gas is produced or evolved. The blast-furnace furnishes carbonic-oxide gas for fuel, and if enough is supplied it will be burned under the boilers.

The burner for gas is either an annular arrangement of pipes like an Argand burner, so that the gases and air shall be intimately mixed, or else the gas comes up through perforations in a fire-brick grate-surface and meets the air for combustion on the top. Great care must be taken in gas-firing to guard against the accumulations of an explosive mixture of gas and air, which may take fire and by its expansion of volume do great injury to the setting or to the boiler itself.

The installation of steam-boilers over the furnace for heating or puddling steel or iron belongs to the subject of gas-fired boilers, since it is desirable that the products of combustion

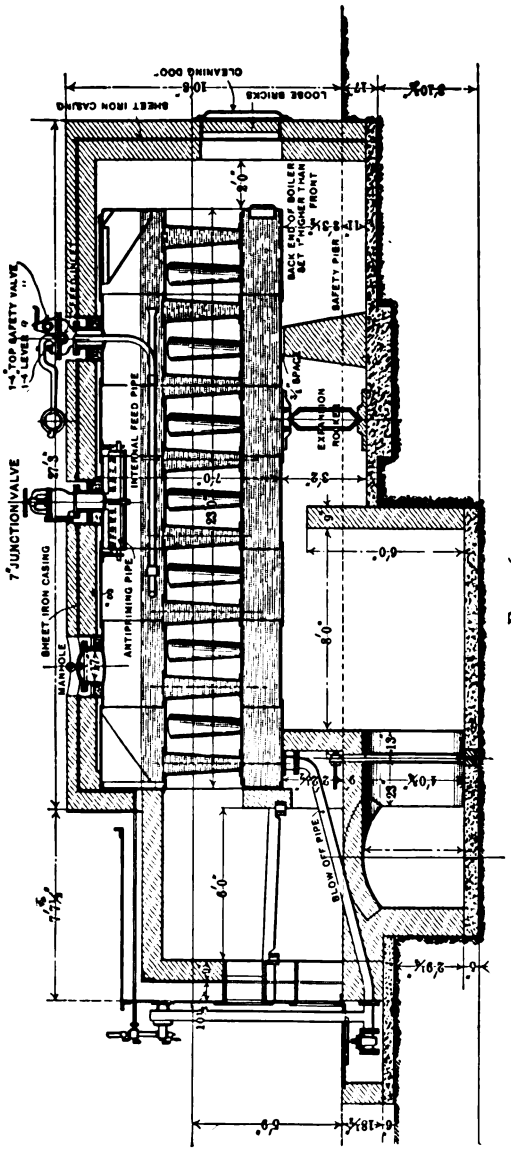
CLEANING DOOR
SHEET IRON CASING
LOOSE BRICKS
BACK END OF BOILER SET 1" HIGHER THAN FRONT
SAFETY PIPE
EXPANSION ROLLER
INTERNAL FEED PIPE
7" JUNCTION VALVE
SHEET IRON CASING
MANHOLE
ANTIPRIMING PIPE
BLOW OFF PIPE

FIG. 469.

in heating or puddling should not contain oxygen in the heating-furnace, and are therefore usually in a combustible condition when they leave the furnace, so that they can be ignited within the boiler-setting and impart their heat by radiation as well as by contact. The condition of gaseous firing, that the gases shall not be extinguished by having their temperature lowered, adapts the two-flue boiler for steam-making under these circumstances (par. 233).

301. **Smoke-prevention.**—While the foregoing discussions have plainly indicated that the condition of smokeless firing for boilers is that the combustible gas given off by the fuel shall be kept at a high temperature, and shall have time and room enough in the setting to unite with oxygen and burn completely, it is not easy to secure these conditions and at the same time maintain an economical transfer of heat to the boiler and to the water. The rapid and efficient transfer of heat by radiation makes it desirable that the products of combustion leaving the boiler-furnace shall be full of glowing or incandescent carbon which shall give a long flame, and to secure the combustion of this gas at the end of its transfer is not an easy thing to do. Hence where smoky fuels have been the usual ones a large number of methods have been attempted to secure smokelessness by preventing the presence of these glowing particles, or by having the combustion complete in the fire-box proper and not beyond it. The various methods for smoke-prevention have been grouped under the following heads:

(1) The supply of excess of air by steam-jets, inducing currents which they warm, and supplying excess of warm air above the fire and behind the bridge-wall. The difficulty with these has been that after distillation of the gas is completed following a charge of fresh fuel thrown on the fire, this excess of air is not needed, and the products of combustion are cooled by the diluting oxygen. Attempts have been made to correct this by graduating the supply of fresh air by chronometric or other appliances, so that the excess should

be cut off after such an interval as is usually needed for the first distillation of gas.

(2) By the coking methods of firing. By these plans a large dead-plate was used (par. 268) so that the gases should be distilled off from the fresh fuel before its combustion was really begun on the grate-surface proper, and when the coking was complete only fixed carbon remained to burn on the grate-surface proper when pushed back. The gas distilled from the fuel on the dead-plate passed over the hot fire and was so warmed that it was ready to combine and burn. Alternate firing of the two sides of the furnace, or the use of two furnaces delivering into a common combustion-chamber, which were fired alternately, belong to this same class.

(3) The methods belonging to the principles of mechanical stoking (pars. 271 to 275) are smoke-preventing methods in that each part of the fire always remains in the same condition, and the fresh coal which distils off gas is received in the coolest part of the grate, and passes to the hotter sections only after the volatile matter has been distilled off and burned in passing over those hottest portions.

(4) Gas- and oil-firing are smoke-preventing methods, since when properly done the combustion ought to be complete, and no carbon should pass out of the setting except in the form of carbonic acid. It is to this group that those settings belong in which the actual combustion of the fuel containing volatile matter is done in a separate furnace and away from contact with the boiler (par. 300). This makes a relatively smokeless and efficient principle, and will answer with coals which cannot be economically burned in any other way.

(5) The down-draft furnace appears to be one of the most successful appliances for smoke-prevention with smoky coals. As satisfactorily applied it involves the use of two sets of grate-bars, one over the other, so arranged that the draft passes downwards through the upper and lower sets of bars, or else passes downwards through the upper and upwards through the lower. Each set has its own fuel, but the intention is that the gases shall be distilled off from the fresh fuel on the

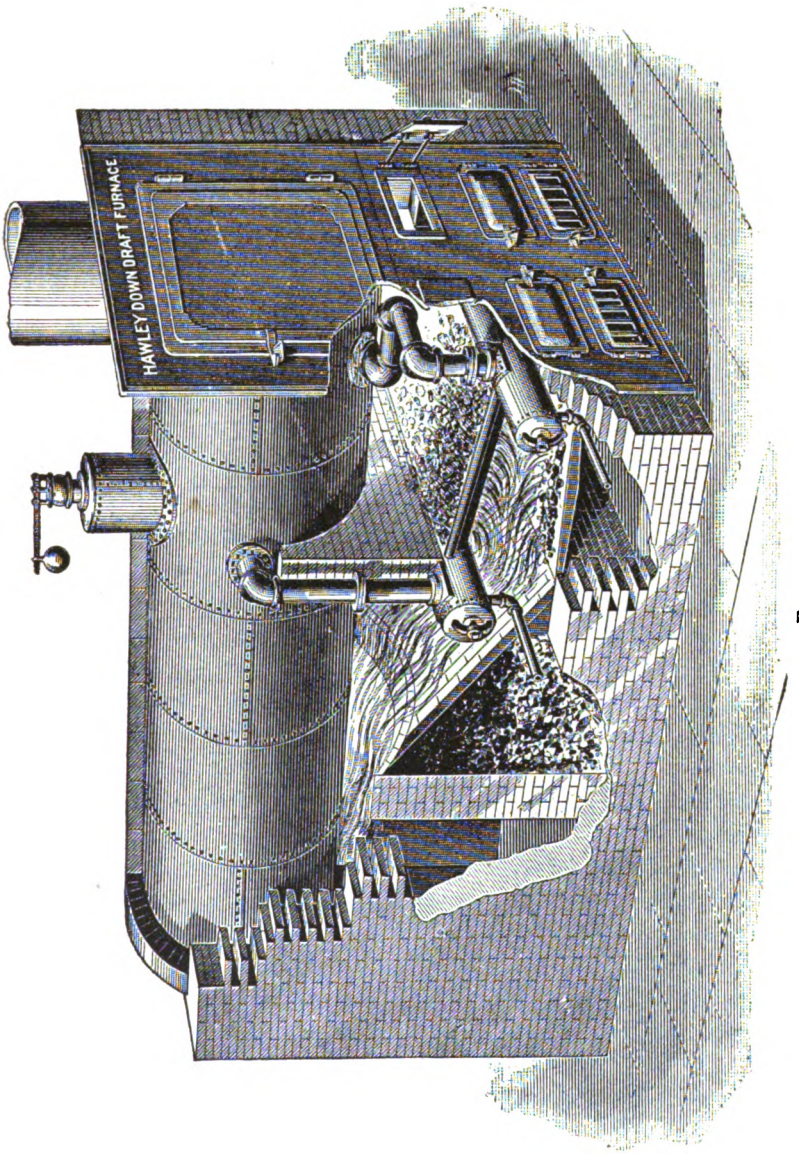

FIG. 470.

Digitized by Google

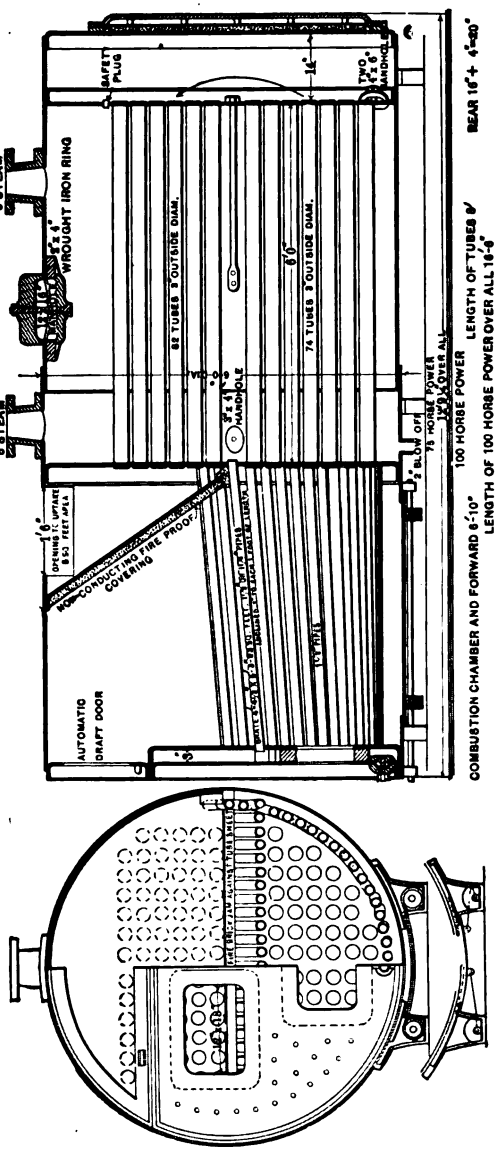
5" STEAM
5" STEAM
WROUGHT IRON RING
SAFETY PLUG
TWO 4"x6" HANDHOLE
82 TUBES 3" OUTSIDE DIAM.
74 TUBES 3" OUTSIDE DIAM.
HANDHOLE
NON-CONDUCTING FIRE PROOF COVERING
AUTOMATIC DRAFT DOOR
75 HORSE POWER
100 HORSE POWER
LENGTH OF TUBES 9'
LENGTH OF 100 HORSE POWER OVER ALL 16'-6"
COMBUSTION CHAMBER AND FORWARD 6'-10"
REAR 16"+ 4"=20"

FIG. 471.

upper grate, and shall be drawn downwards to mix with the hot products escaping from the lower where the solid carbon is burning. By this the temperature of ignition is maintained for the distilled gas, so that it shall burn with the abundant supply of warm air admitted for this purpose. Figs. 470 and 471 show boiler-settings of this type.

(6) The use of fire-brick or similar refractory material in the combustion-chamber. This becomes hot by the impact of flame and gas, and keeps the temperature of the gas up to ignition. It imparts some of its heat to the boiler by radiation after it is once brought up to full heat.

(7) Preheating of the air-supply by hollow walls or flue-boxes which the hot gases surround while the fresh air flows within them.

The objections to most of the smoke-prevention devices have been that the introduction of such appliances diminishes either the economy or the capacity of the plant as compared to what it was when the chimneys were allowed to smoke. The excess of air, diluting the products of combustion explains a loss of economy and capacity, and the superior efficiency of the yellow flame, as compared with the colorless flame of perfect combustion, is also responsible in part for this result. The losses seem to be about 12 per cent of power or from 7 to 13 per cent of economy.

The term smoke-consumption or smoke-burning is an improper one, since a true smoke consists of a current of hot gases in which particles of carbon in the form of true lamp-black are carried. Such lamp-black once made is incombustible and cannot be burned. The products of combustion are often colored brown by the presence of tarry or similar combustible matters, and these will ignite if the temperature be made hot enough. It is possible to prevent the appearance of smoke by catching it in water through which the products of combustion pass, and in which the carbon is thrown down.

CHAPTER XXVI.

BOILER ACCESSORIES AND APPLIANCES.

302. Introductory.—The typical boiler, whether internally or externally fired, requires for its safe handling and proper management certain appliances and apparatus having to do with the observation of the transfer of heat, and the supply of water to be made into steam, and also as means for securing its safety against accident. Such accessories are the gauges for water and for steam, the feed apparatus and heaters, the safety-valve, and the blow-off connections.

303. Steam-gauge.—It is important that the fireman in charge of a boiler should know whether the fire is supplying heat-energy to the water faster than it is being withdrawn in the form of steam, or slower, or just at the proper rate. The most convenient indications of the heat-reactions are given by an appliance which shall record the pressure in the boiler, since if the pressure is rising, heat is being stored by the water, and if the pressure is falling, heat is being given off faster than it is being supplied. This strictly and properly is the principal function of the steam-gauge. A secondary but sometimes very important function is to indicate whether the pressure and the heat-supply are rising so rapidly as to endanger the structure from excess of internal pressure.

The first and simplest form of steam-gauge is a U type or manometer. The size which this appliance is to receive with high pressure precludes its use as a pressure-gauge, although it remains the standard for all of its more convenient substitutes. It has been found most convenient to replace the weight of the mercury-column by a spring which shall undergo

a known deformation for each pressure, and which shall indicate its deformation by the movement of a needle over a dial. Such spring may either be a flat disk or diagram, Fig. 472, or it may be a hollow brass or steel tube which is bent into an arc of a circle, and the sides permitted to come together by this bending, so that the section of the tube is that of a very much flattened oval. When pressure is admitted on the inside of this tube the parallel sides tend to separate, and in separating they must increase the radius of curvature with which the tube was bent within the circle. The tendency to

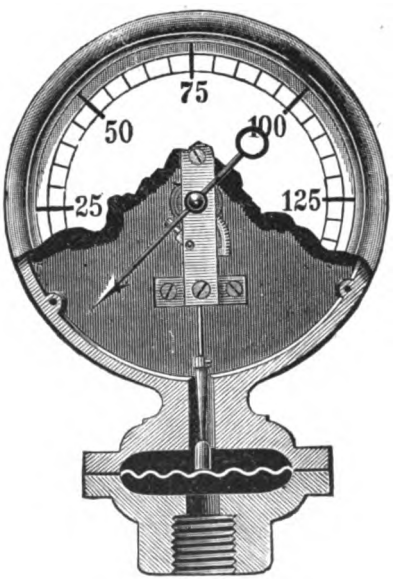

FIG. 472.

straighten out by internal pressure, can be indicated by a multiplying gearing which shall cause an indicating-needle to traverse an arc. Fig. 473 shows the ordinary Bourdon gauge with flattened tube availing of this principle. Pressures below that of the atmosphere can be observed by similar appliances. The aneroid barometer is a vacuum-gauge.

Fig. 474 shows a form of Bourdon spring in which the two arms have been shortened so as to prevent their shaking dis-

agreeably when exposed to the jarring in locomotive service. Sensitiveness or a considerable motion of the needle is secured by a double connection to the multiplying device.

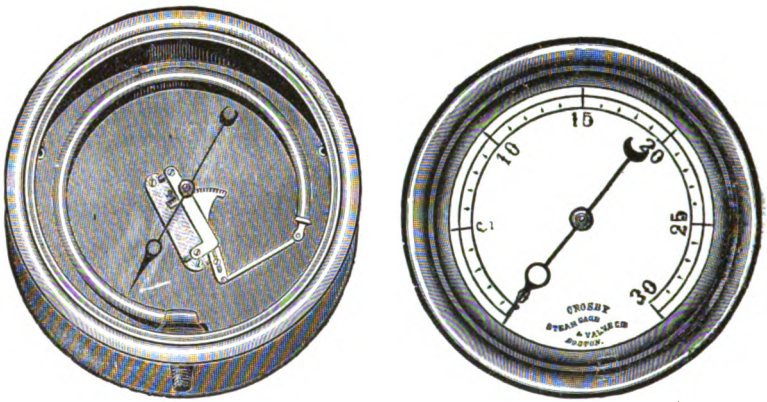

FIG. 473.

This arrangement is also of advantage for use in gauges which are to be exposed in portable boilers to temperatures below freezing. The two arms can be drained of the water which

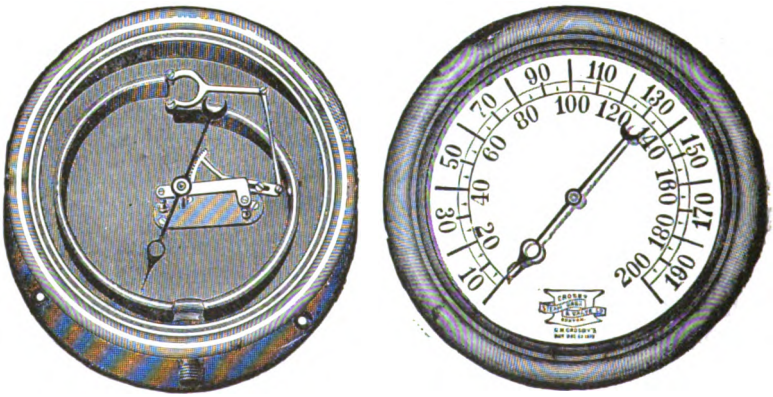

FIG. 474.

they will contain from condensation, whereas the form of Fig. 473 will always hold the water that had once entered it. It is usual to secure the separation of hot steam from the gauge-

spring by an intervening water-column, for which provision is made by connecting the gauge to the boiler through a U tube, which will make a siphon (Fig. 477). Fig. 475 shows a device which produces the same effect as a water-seal. Provision, however, should be made for draining this siphon both for cleansing indoors and to prevent freezing without.

FIG. 475.

The defects of such spring-gauges are:

(1) The spring loses its original resilience by use and heat. If this is due to a permanent change in the structure of the material, the gauge is useless.

(2) Rust and improper treatment may cause the friction of the needle mechanism to prevent the recording of the full pressure against the spring.

(3) The needle may slip so as to change its relation to the spring, which will cause the gauge to record permanently above or below its proper pressure.

304. Standardizing or Calibration of Steam-gauges.— To ascertain the accuracy of a gauge it is to be compared with a standard. It is usual to compare it in practice with a test-gauge, which is one kept specially for this purpose and not exposed to the conditions of service. The test-gauge, however, requires to be itself standardized, and for this purpose three methods are usual. The first is to connect the gauge which is to be tested upon a pipe or similar apparatus within which hydraulic pressure can be admitted to come also upon a valve closing an opening which is made exactly one square inch of area. By loading this valve with known weights, and observing the pressure recorded by the gauge when the water-pressure lifts the valve and weights, the gauge is calibrated. This can also be done with a piston which can be loaded with known weights moving without friction, or with a minimum friction, in a cylinder.

The ultimate standard is the mercury-column. The gauge to be tested is connected on the same pipe which opens into the short leg of the mercury-column, and the pressure re-

corded in the gauge when the mercury in the long leg stands at the heights which correspond to the real pressure indicates its error or its truth.

305. **Recording-gauges.**—It is convenient to have a continuous record of the variations of pressure in the boiler or in the other appliances in which pressure is to be observed. It is very simple to connect the spring or piston mechanism of the gauge or testing appliance to a link carrying a pencil-point which shall move in one direction by variation of pressure over a piece of paper which is made to travel in a direction at right angles at a known rate by means of a clock. The pencil-point traces a line as the pressure directs, and the intensity of that pressure is measured by the vertical ordinates on the diagram, while the time at which it occurred can be found by a horizontal measurement.

306. **Water-gauges.**—It will be apparent that a device must be furnished to a boiler such that the operator in charge can see whether the water is being supplied to it at the same rate that steam is being withdrawn from it, and regulate the supply of feed-water accordingly. As with the steam-gauge, a secondary use of the water-gauge device will be to enable the attendant to see whether the quantity of water, or the level of water, in the boiler is falling so low as to expose heating surfaces to the action of gas or flame without water on the other side, and also whether the water-level is rising to a point at which the priming or mechanical entrainment of water would be feared. The danger from low water-level in the boiler, whereby overheating is caused, would be that any or all of three injuries would follow. First, a general overheating would cause a corrosion or wasting of the iron by oxidation. Second, if there were any lack of homogeneity in the plate from cinder or defective welds, a blister would be caused; and third, when the overheated plate was cooled suddenly by filling the boiler with cool water the reduction of temperature would cause a sudden shrinking which, if not general and easily yielded to, might strain some joint of the boiler beyond its point of resistance when the boiler was

already under considerable strain from the internal pressure. It is this last danger which makes low water so often a contributing cause to a boiler-disaster.

307. The Glass Water-gauge and Column-pipe.—The simplest form of water-gauge is a glass tube about a foot long or a little over, which is connected by proper fittings so that its bottom should be below the lowest water-line, and its top above the highest (Fig. 476). These fittings are screwed into the head of the boiler directly in boilers which are not set in brick, and the water will stand in the glass tube at the same height that it stands behind the head of the boiler. A simple inspection by eye is all that is necessary to see whether the water-line is above or below the normal. In boilers set in brick, where the head is not exposed, the gauge-glass will be carried upon an independent vessel which will be connected by proper pipes above and below the water-line respectively. This fixture is called a column-pipe (Fig. 477), and the water in it should stand at the same level as that in the boiler, and therefore make the gauge-glass show the water-level in all three vessels. Care must be taken in connecting the column-pipe that it shall be easily cleansed of deposit or other material which might clog it, and prevent its giving the same indications of level as are correct for the boiler itself.

The advantages of the gauge-glass are its simplicity, its cheapness, and that it is easily observed.

The objections to it are:

(1) Its fragility. It may be broken by accidental blows in spite of the brass-wire guards *ml* shown in Fig. 476 to prevent this accident. Furthermore, it is liable to break from a defective alignment of the two fixtures cramping the glass and causing it to crack, and also from a deterioration which the glass undergoes in service, particularly with waters containing any alkali. In locomotive practice the jarring tends to break the glass, and in confined spaces it is specially liable to accidental injury. When the glass breaks under pressure it will be apparent that two very powerful jets of hot water in one direction and of steam in another are thrown out from the

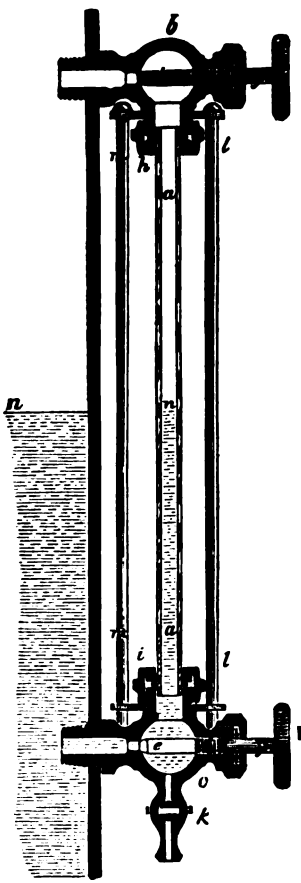

FIG. 476.

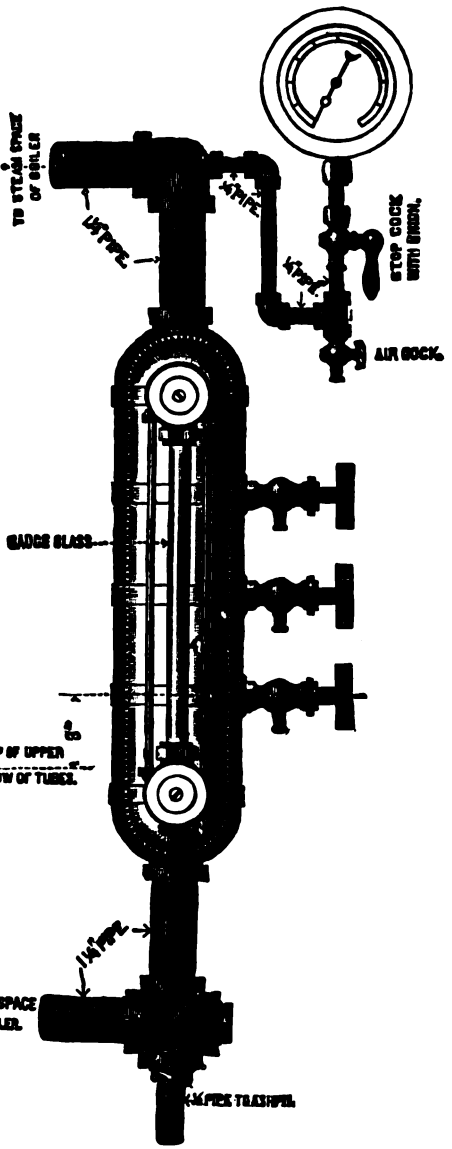

FIG. 477.

fixtures, and under high pressure will fill the room instantly with hot and irrespirable steam. To prevent this difficulty a form of gauge-glass fixture has been devised in which the two attachments have an automatic valve opening inwards, and

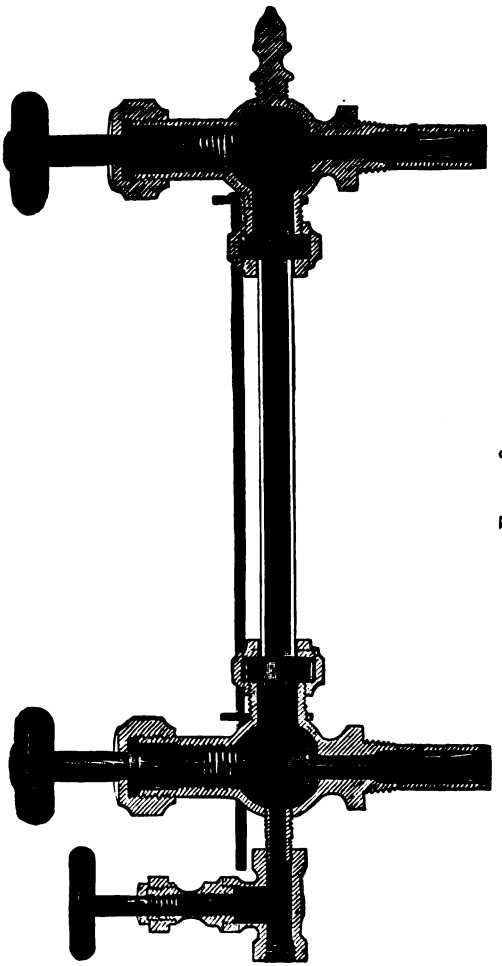

FIG. 478.

held in that position by a spring (Fig. 478) or by gravity (Fig. 479). When there is equal pressure on both sides of the valve the opening is clear into the glass-tube. When the tube breaks, the outrush of steam and water will close the

valves against the spring or gravity and thus automatically shut off the broken tube. Fig. 479 shows this device with a ball as the valve to be closed when breakage occurs. The pin on the end of the spindle of the hand-valve (Fig. 478) forces the automatic valve away and opens the connection through the glass when the spindle is withdrawn. The spindle should be withdrawn slowly, so that the pressure may equalize in the tube without drawing the valve to its seat.

(2) The gauge-glass may give false indications. This may happen because the somewhat tortuous passage in the lower fixture has become stopped with scale. This can be guarded against only by frequent opening of the blow-cock at the bottom of the fixture, so as to wash it out and be sure that the passage to it is free. The indication may be deceptive because the lower valve is closed, preventing the water from descending in the glass when it descends in the boiler. This is best guarded against by making the valves of the fixtures to be cocks operated with a handle whose position indicates whether the valve is open or closed (Fig. 479). The third objection is the invisibility of the water in the glass when the water is clean. This can be obviated by having a colored strip made in the glass at the back which will be visible through the steam above the water, but which will be made invisible by diffraction caused by the water within the glass. The water usually is slightly colored, and it can be detected with care even if it

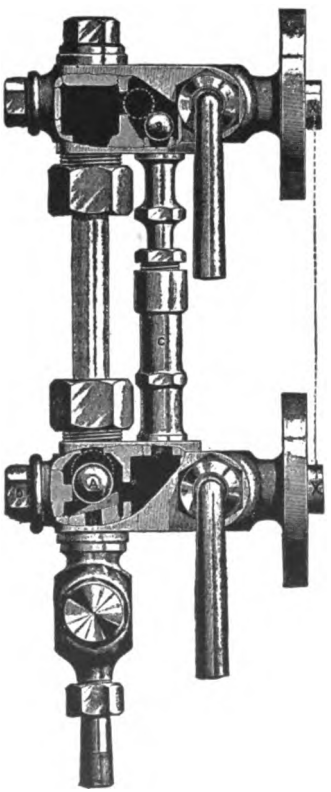

FIG. 479.

is clean. The freedom of the connections between the gauge-glass and the boiler can also be insured when the boiler is steaming by observing the motion which the operation of steaming always causes in the water in the boiler from the presence of waves. Fig. 477 shows a standard water-column with the connections for cleansing at the bottom.

308. The Gauge-cocks.—By reason of the difficulties attaching to the gauge-glass, another form of water-gauge is usual without the glass or in addition to it. This involves the making of three or four openings into the boiler which can be opened by valves, and through which openings a sample can be taken from the level into which the openings are made. Such valves are called gauge-cocks or try-cocks, and will be fastened by screwing into the head of the internally-fired boiler, or into the column-pipe of the brick-set boiler. It will be apparent from Fig. 477 that if there are three of these cocks, the middle one should be at the normal water-level, the upper one above it, and the lower one below it. If the cock be opened above the water-line, it will permit dry steam to flow out, and its quality will be revealed to the eye and to the ear. The passage through the small opening will tend to superheat the steam, so that it will be an invisible gas for an inch or two from the nozzle, and will give a sound like the escape of a true gas. From the lowest cock water will be drawn, if it is below the water-level, but this water on reaching atmospheric pressure at the outlet will at once become saturated steam, which will be a white cloud from the very outlet of the valve, and will reveal itself to the ear by the difference in sound of the escape of water as compared with the sound of escaping gas or air. The middle cock, when the water-level is practically opposite its opening, will withdraw both steam and water, which will make the characteristic sputtering noise of air and water escaping through an outlet. The appearance to the eye will be the same as from the lower cock, since the water is the visible thing. Large boilers often have four cocks.

These gauge-cocks require to be opened by hand, and

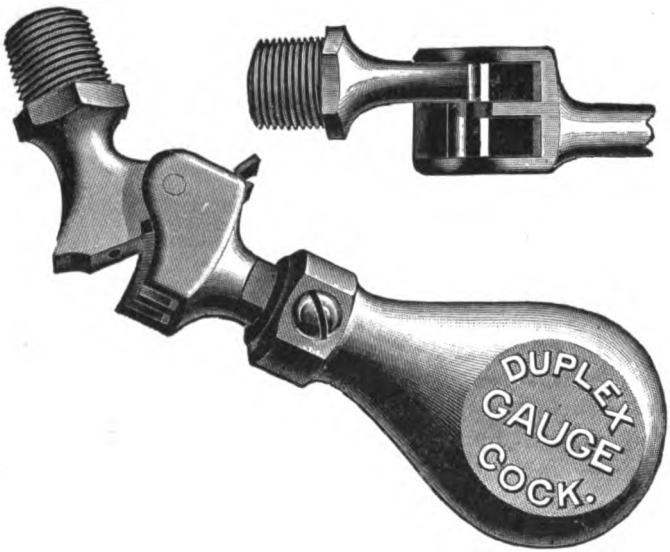

FIG. 480.

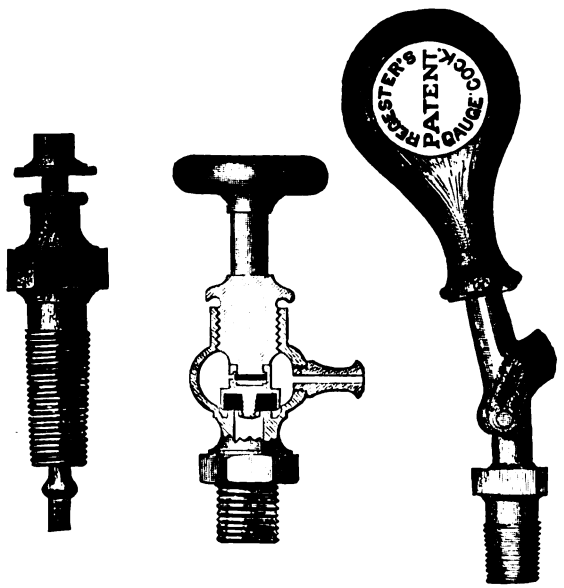

FIG. 481.

therefore must be modified for boilers whose water-level is higher than convenient reach. Different forms of try-cocks have been introduced, operating either by a weight which has to be lifted to open them, or else they are made like cock-valves which can be easily turned by an extension which comes down to convenient reach. Figs. 480 and 481 show types of gauge-cocks.

309. **Float Water-gauges.**—It has been sought for many years to find a satisfactory method of indicating the water-level by means of floats within the boiler whose position should cause the motion of a convenient indicator without. Some very early boilers had water-gauges of this class. The objection to them is the friction, which is a variable quantity and which acts upon the means used to transmit the motion of the float to the indicator outside the boiler. The float is apt to catch and be held by such friction, and fail to indicate the real changes in water-level. The other difficulty is that no float material has been found which does not ultimately become affected by heat and pressure, so as to absorb water from the water in which it stands, and thus become either partly or entirely filled. It seems to be a general idea that it is not safe to put dependence upon float-gauges for these reasons.

310. **Low-water Alarms.**—It is quite possible, however, to use the float as a means of giving warning that the level in the boiler has been allowed to fall too low. This use is justified from the fact that they are not depended on, or should not be, for the normal working of the boiler, but are present as a safeguard if they fulfil their purpose in emergency. The usual plan is to allow these floats to control a valve where steam shall be admitted to a whistle. The normal rise and fall of the float within the limits of safe working is without effect on the whistle-valve, but it opens it if the float is too high or too low. A similar device can be arranged depending on the difference of expansion of metals in steam or in water. When a spindle is surrounded with water it is short enough to hold a valve shut, but when the water falls below the

opening into the tube within which that spindle stands, the expansion of the spindle will open the valve.

311. **Fusible or Safety Plugs.**—As an additional safeguard to prevent injury from low water it has been the custom of many engineers and of some state legislation to demand that a plug shall be inserted into the boiler, at or near the dangerous low-water line, made of Banca tin or of some of the cadmium alloys, which have a relatively low fusing-point. When the disk or plug of such fusible metal is covered with water the heat is transferred so rapidly that it should not melt. When the water leaves the plug, the lowered specific heat of steam prevents the rapid withdrawal of heat, whereupon the plug melts, and steam blows out through the opening to give warning of trouble. Fig. 482 shows a construction of such fusible plug

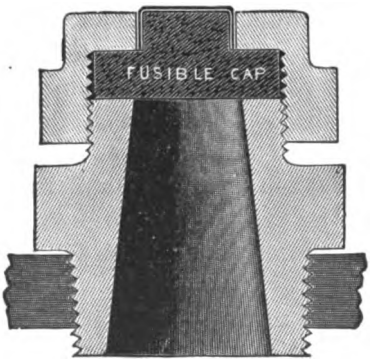

FIG. 482.

in which a brass shell is fitted with a core or disk of fusible metal. The objection to such fusible plugs is, first, that the melting-point of most of these alloys changes with time and is not always certain. Secondly, when covered with a crust of boiler-scale they may not be properly cooled by the water, and fuse when everything in the boiler is normal. On the other hand, they sometimes fail to act either from the first difficulty or from some unknown cause, and in any event, when blown out, it is annoying to replace them. The location of such fusible plug in a tubular boiler is shown in Fig. 456.

The fusible-plug alloy has been applied as a safety or low-water alarm by inserting a disk or diaphragm of metal of this fusible quality in a pipe which admits steam to an alarm-whistle. When the pipe is sealed by the boiler-water, the plug does not become hot enough to melt. When the fall of the water-level permits the water to flow out of the tube, steam replaces it and has a sufficient temperature to melt the plug and blow the whistle.

312. Introduction of the Feed-water.—The water to be evaporated by the boiler is fed to it as a rule cooler than the water within the boiler. It should therefore be introduced at such a point as to favor and not impede the currents of circulation and convection within the boiler; and furthermore, if it can be persuaded to deposit the solid matter which is contained in the feed-water immediately on entering the boiler, it is desirable to have regard to this in selecting the place at which the water shall enter. In sectional and most of the shell boilers this indicates that the water should commence to flow within the boiler at or near the surface, and at the back of the boiler or where the heaviest water is descending. By having the feed-water enter at the surface there is also met less danger from the siphoning of the water in a boiler out through the feed-pipe either to another boiler or to waste, if anything is wrong with the check-valve which should prevent this action. Boilers may empty themselves through a feed-pipe which enters at the bottom; but where the feed-pipe is near the surface of the water, the water below its level can only get out by evaporation. This further produces less injury to the metal of the boiler near the feed-inlet from sudden change of temperature.

It is more convenient, however, to have the valves control the flow of feed-water into the boiler at the front rather than at the back. This has given rise to a very prevalent practice of carrying the feed-pipe through the front head, and along the length of the boiler to that point farthest from the fire at which the water shall actually mix with the water in the boiler. This serves to bring this entering water up somewhat nearer

the temperature of the boiler-water before it strikes the shell-plates. This inner feed-pipe is sometimes perforated along its length with the idea of causing the cold water to enter in fine streams rather than all at one place. The objection to the interior pipe, and particularly to a perforated one, is its liability to become stopped up by matter precipitated from the water by heat. It appears in Figs. 456, 469, and many others.

313. The Feed-pipe and Feed-valves.—The feed-water will be introduced into the boiler through a feed-pipe on which will be certain controlling valves. The pipe is very often made of copper by reason of its flexibility and ductility under the changes of temperature to which it is exposed, and because bends are easily made in it, and because the solid matter precipitated from the water does not adhere to it. Iron pipe, which is often used in stationary practice, has the advantage of being cheap and that the fittings which are required are easily made and attached to it, which is not the case with the copper feed-pipes. The diameter of the pipe should be chosen first with respect to having the velocity of the water through it not exceed 400 to 600 feet per minute of linear velocity. It is desirable also that the feed-pipe should be large enough so that even if it should become somewhat stopped up with scale, as has occurred in the example shown in Fig. 483, it may be possible to get the scale out, or to leave still space enough through which the water can be forced.

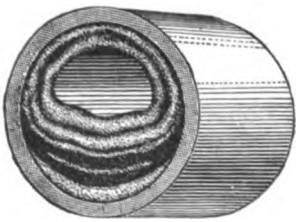

FIG. 483.

Upon the feed-pipe will be the necessary valves. The first of these is one for controlling the flow of feed-water into the boiler in question if a number of boilers are supplied through a common pipe. This will be through a cock-valve, which is preferred in English practice, or a globe valve, which is more usual in American practice. The cock-valve is not liable to clogging from precipitated scale, which is a difficulty

connected with the globe valve, but with modern forms of globe valves they are easier to keep tight than a taper plug. The latter also gives trouble sometimes by expansion, although the packed-stem plug-valves are not open to this difficulty. Close to the boiler where the feed-pipe enters it will be a check-valve. This is imperatively necessary where several boilers are connected to a common feed-pipe, but is desirable in every case. The check-valve lifts by excess of pressure on its lower side, as compared with the pressure in the boiler, which bears upon its upper side. Its object is to prevent water which has once gotten into the boiler from getting out again back into the feed-pipe. This serves to keep the scale out of the feed-pipe, to prevent siphoning of water from one boiler into another, and to prevent hot water from working back to the pump where it would be troublesome. These check-valves are made to work in horizontal or vertical pipes. The difficulty to which they are liable is a tendency to leak through abrasion of their seats, or by being held off the seat wholly or in part by some solid matter in the feed-water which gets caught in the valve. All such check-valves have an opening to permit access to the valve for inspection and for repairs (regrinding of the seat, or renewal of the valve-face) (Figs. 484 and 485), and in order to permit this repair or inspection without emptying the boiler of pressure and of water it is desirable to interpose a cock-valve between the check-valve and the boiler, so that the latter can be cut off from the check-valve when it is to be inspected.

314. The Supply of Feed-water to the Boiler.—The pressure in the boiler is, as a rule, much higher than the pressure which prevails in the ordinary water-works system, and consequently special appliances are called for to get water into the boiler against the pressure which prevails in it. This motion of the water can be secured either by a pump or by an injector. There are two great methods of feeding by means of a pump. In one the feed-pump is driven by the main engine of the power plant, either directly from its mechanism, or indirectly from the machinery of transmission

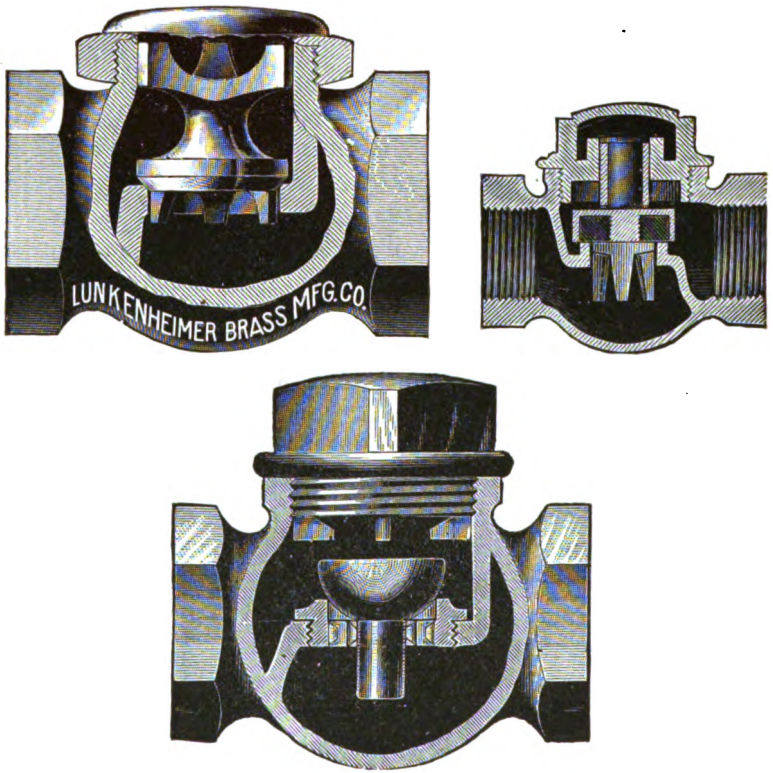

FIG. 484.

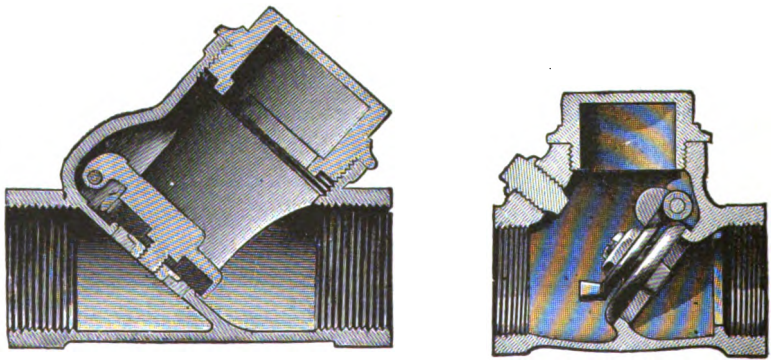

FIG. 485.

through belting and gearing. This principle, however applied, has certain advantages and disadvantages. The advantages are that the feeding of water will be constant, and proportional to the consumption of steam. It is possible to control the supply of water so closely that the pump shall replace in the boiler at each stroke as much water as is withdrawn by the cylinder in the form of steam. It is the usual design of pumps of this class to have a capacity one and one quarter times the maximum evaporative capacity of the boiler, and regulate within and below this limit by partly closing the valve which supplies the pump on its suction side. The barrel is therefore not quite filled at each stroke when the pump is not running at its full capacity. The second advantage of this attached system is that the power required to feed the boilers is furnished by the main or principal cylinder, and is probably therefore more cheaply obtained than if a smaller special pump is run for this purpose. The objection to this principle is that in order to feed the boiler the entire engine or transmission machinery must be run.

The detached system or donkey feed-pump method is to pump by means of a special steam-engine with its own cylinder. This avoids the last difficulty, but the weight of steam used for feeding in this way is probably greater than by the other system. It is most frequent to have both systems, particularly in an engine of slow rotative speed. The advantages of economy and continuous feeding are secured when the engine is running, and the donkey pump can be used when the main engine is still.

315. **The Fly-wheel Pump.**—The fly-wheel pump is a form of donkey-pump which has been much used for boiler-feeding. It is a steam-engine with all the usual mechanism, but with a pump-cylinder on the prolongation of the piston-rod (see Fig. 4). The advantages which it offers are:

(1) It is simple and positive in its action

(2) This adapts it for use where but unskilled labor is to be had.

(3) It secures economy of steam-consumption by its ability to work the steam expansively.

(4) Its stroke is a positive length determined by the crank, and if necessary it can be worked as a hand-pump by turning the fly-wheel.

The objections to the fly-wheel pump are:

(5) It cannot be run slowly without danger of stopping on its dead-centres.

(6) It cannot be conveniently controlled therefore by valves upon the delivery-pipe from it.

(7) The objection which has been urged against fly-wheel pumps that they accelerate the flow of the water through the pump-cylinder as the velocity of the piston is controlled by that of the crank, has no significance with the relatively small masses of water which these pumps are required to handle.

316. Direct-acting Pump.—The direct-acting pump differs from the fly-wheel pump by having no crank, shaft, or revolving wheel, but simply the steam-piston on one end of a piston-rod, and the pump-piston or plunger at the other (Fig. 486). Since there is no stored energy or velocity in a revolving or moving mass to carry the motion past the end of the stroke and cause the engine to reverse, this result must be obtained by having the valves thrown by steam, as discussed in par. 113. The main piston turns steam on to the valve of the auxiliary steam-engine, whereby the valve of the main engine is moved and the principal steam-ports opened. If this auxiliary engine is also a pumping-engine, the pump becomes what is called a duplex pump.

The advantages of a direct-acting or non-fly-wheel pump are:

(1) The velocity of the delivery is proportional to the resistance offered by the water. Hence it is possible to control the feed-pump of the boiler when of this class by the opening and closing of valves upon the delivery. When the resistance to the delivery exceeds the forward effect of the steam-pressure the pump stops. The forward or feeding force is secured

by making the area of the steam end of the pump three or four times the area of the water end.

(2) The pump has no centres, but will start from rest as soon as steam is turned on to it. This property is the result

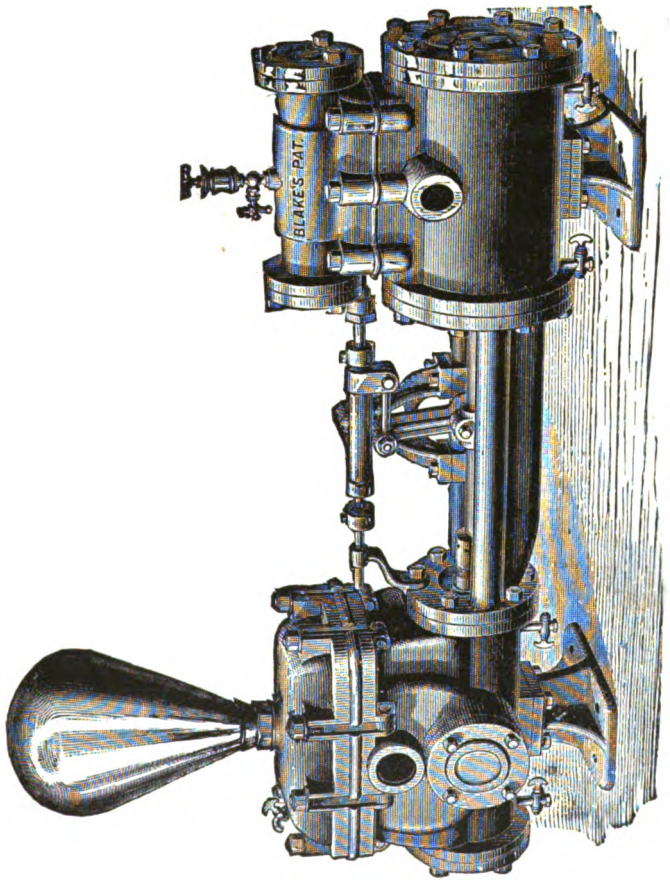

FIG. 486.

of the steam-thrown valve, because the main valve is open at one end of the cylinder until reversed and opened wide at the other end.

(3) The pump can be run as slowly as suits the convenience or the requirements of the feeding.

(4) The velocity of flow is not accelerated by the connection of the piston to revolving mechanism.

The objections to the non-fly-wheel pump are:

(5) That the steam-thrown valve does not encourage expansive working, nor at ordinary speeds can it be secured when there is no fly-wheel to store up excess of work at one part of the stroke to give it out at the second part. In large water-working pumping-engines this has been secured by devices which are not considered worth while for feed-pumps.

(6) The stroke is not positive in length, as there is nothing to compel it to be so.

(7) This compels an excessive clearance-volume in the steam-cylinder in order to guard against the piston fetching up against the head when running at high speed.

(8) The operation of the auxiliary engine and main valve being caused by steam, its operation is not always obvious, and this lends an appearance of complexity and mystery to their operation.

The advantages where intelligent labor is to be had which belong to the slow running and easy control of the direct-acting pump have made it a very popular form for boiler-feeding. The fly-wheel type remains in general preference in Western river-boat practice and for fire-engines.

It is not desirable to control a direct-acting pump by a valve on the suction, since the barrel of the pump should be perfectly filled at each stroke. Otherwise, when the pump reverses, part of the stroke will be made against little or no resistance, and as there is no controlling mechanism of crank and revolving shaft, a serious jar will occur when the pump-piston encounters solid water after part of the stroke is completed.

For similar reasons when a pump is to handle hot water it should receive the water from a height caused by gravity, and not be compelled to lift it. The vaporization of the hot water under the reduced pressure caused by the sucking action of the pump will prevent the barrel from filling, entailing the same difficulty from jar. When pumping hot water, further-

more, the pump will require to be fitted either with metallic valves or hard rubber resistant to the action of heat. With cold water the ordinary soft-rubber valves closed by springs are cheap, convenient, and tight.

317. The Injector.—The injector is a mechanical appliance for feeding the water into a boiler against the pressure therein, and using for this purpose steam from the boiler which is to be fed. This seems like a mechanical paradox, since the principle of differences in area exposed to pressure cannot be availed of as in the pump, but the principles of the conservation of energy and its transformation from one form into another are able to explain and justify its observed action.

The injector consists of a hollow, somewhat tubular casting, usually of brass, into which are made three openings. The first one (*A*, Fig. 487), which usually enters the top of the instrument, is for the delivery to it of hot, dry steam from the dome of the boiler or other convenient place. The second opening, *B*, is the inlet for the water to be fed, which is usually delivered to it from below. The third will be the feed-outlet, *HI*, opening towards the boiler, through which the feed-water impelled by the steam will pass to overcome the pressure on the check-valve and enter the boiler.

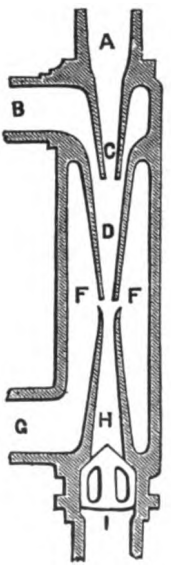

FIG. 487.

The injector depends also upon the principle whereby a current of steam at high velocity will induce a current of air to flow with it, so that by this action the air above the water in the supply-pipe to the injector will be rarefied and removed, permitting atmospheric pressure unbalanced in the water-pipe to force the water up through the steam-nozzle, and thus make the instrument a lifting as well as a forcing appliance. When the steam from the boiler meets the water through the supply-pipe, the energy resident in the steam remains in the drops of water which result from the conden-

sation of that steam when it meets the water. These rapidly moving masses of water carry with them the excess of water supplied, and the rapid flow of the weight of water thus set in motion produces a continuous impact on the under side of the check-valve which the static pressure on its upper side is unable to withstand. The valve is therefore lifted off its seat against the pressure in the boiler sufficiently to allow the moving current of water to enter the boiler in a continuous warm stream.

When the injector has to be a lifting injector, there will be a fourth outlet to it through which steam will be blown to waste during the few seconds necessary to exhaust the air in the pipe supplying cold water (*G* in Fig. 487). As soon as the steam passing out of the waste changes to water, it indicates that the lifting operation is completed and the waste can be closed, whereupon the instrument will feed to the boiler.

318. The Handling of the Injector.—The operation of the injector as a boiler-feeding apparatus will be generally as follows:

The waste-valve being open, steam is turned on either by an independent valve, or by a special valve of the injector. This steam will appear at the waste, and will blow through it until water is caught by the principle of induced currents, when the water will condense the steam and water will appear at the waste. The waste is then closed and more steam admitted to furnish the necessary energy to displace the check-valve. The amount of water delivered to the boiler will be determined by the amount of steam furnished. In some forms the lifting function is separated from the forcing function, and is controlled by separate valves. In others the flow of combined steam and water through a primary set of nozzles is made to induce the flow of further water through a secondary, usually a parallel, set of nozzles. These instruments are usually called inspirators. The ejector is a form of injector in which, by enlarging the delivery-outlet so as to reduce the velocity at that point, the instrument obtains a capacity for handling larger weights of water, but against lower

resistance. High velocity of delivery is necessary to overcome great pressures.

The modern forms of the injector are arranged to be operated with one lever which is either so connected to the waste and the controlling inlet that they are operated in succession

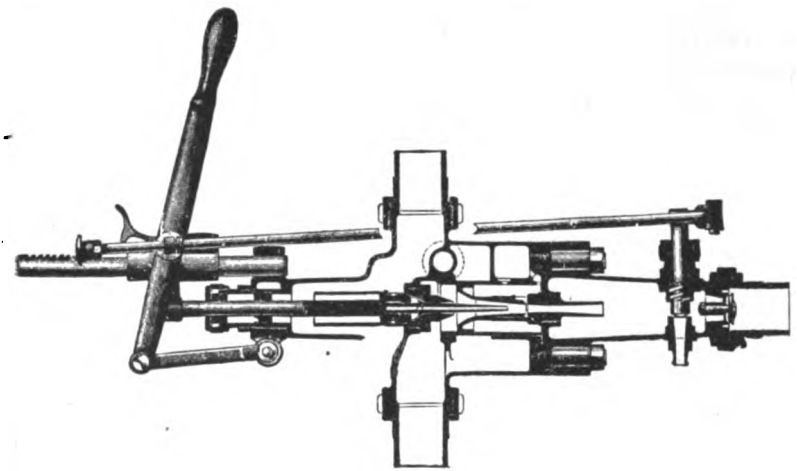

FIG. 488.

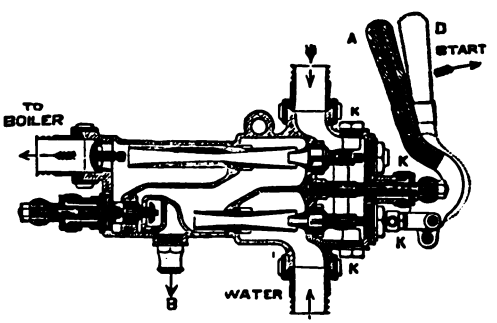

FIG. 489.

as the lever is moved, or a partial motion of the lever opens the waste, while a complete motion closes it. This improvement not only simplifies the operation of the injector but makes it possible to locate it in places where it must be operated by means of a rod (Figs. 488 and 489).

319. Advantages and Disadvantages of the Injector.—The injector as a donkey or independent boiler-feeding appliance offers the following advantages besides those which attach to the principle of feeding independently of the principal engine:

(1) It is cheap.

(2) It is compact so as to occupy but little space in proportion to its capacity as a machine for moving water.

(3) It has no moving parts like piston, rods, etc., so that it has no running cost for repairs, but only that caused by the steam which it uses.

(4) It delivers the water hot to the boiler.

(5) It has no exhaust-steam to be disposed of, but carries its own exhaust-steam back into the boiler.

These advantages of the injector have been of critical significance in fitting it for use in locomotives, where it is practically universal.

The objections to it are:

(6) It stops working with variations in pressure of the steam, or will not start with a pressure less than that for which it has been designed. This is not true of all forms, but of those in which, as their feeding progresses, the pressure falls sufficiently to interfere with the working relation between the energy of the moving steam and the resistance offered at the check-valve.

(7) Many forms when stopped in this way, so that the steam fails to be condensed by the water, get hot under these conditions and cannot be started without being thoroughly cooled.

(8) The water to be fed cannot be much over 100° Fahr. in temperature. The instrument depends upon condensation for part of its action, and where the water is too hot to condense the steam it will refuse to work.

The injector, by reason of the mechanical principle that a mass of water is only put in motion by bringing to bear upon it a mass of steam properly related to it, uses about as much steam in the operation of feeding as a pump, so that its

economy does not result from this cause. It derives its advantage from delivering warmed water without a preheating appliance or feed-water heater.

320. The Economy of Preheating the Feed-water.— It has already been discussed in Chapter XXVI that the function of the coal is to heat the water from the temperature of the feed-water to that of the steam, and then to make steam of that water. If some of this heating can be done by heat which would otherwise be wasted, so much less coal is required

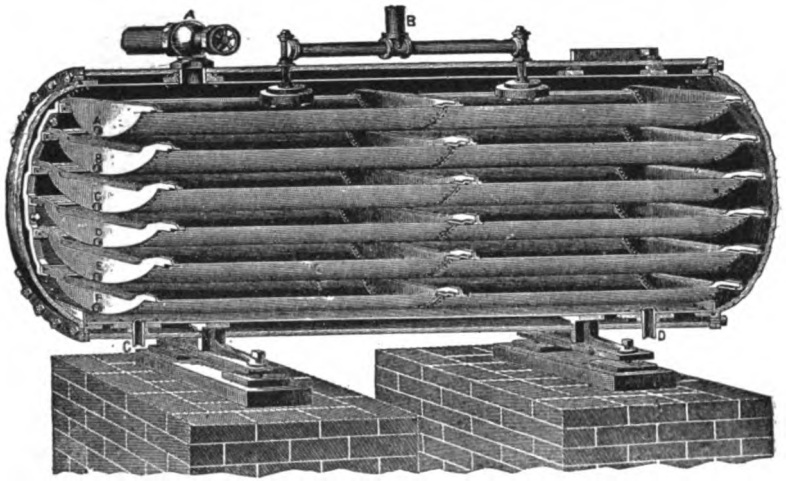

FIG. 490.

to be burned under the boiler. The calculation of the gain from preheating is not difficult (see notes). Two great types of feed-water heaters are to be met. The first are those in which the feed-water extracts from the steam rejected from the cylinder some of the heat which would otherwise be lost, and the other is the class which utilizes the heat which has escaped from the boiler-setting without being utilized in steam-making. The first class are called exhaust-steam heaters, the second class are called flue-heaters or economizers.

321. Exhaust-steam Heaters. — There are two great classes of exhaust-steam heaters. The first are known as

open heaters, in which the feed-water comes in direct contact with the exhaust-steam and withdraws its heat by direct condensation. The other class are called closed heaters, in which the steam and water are in separate circuits of pipes or coils

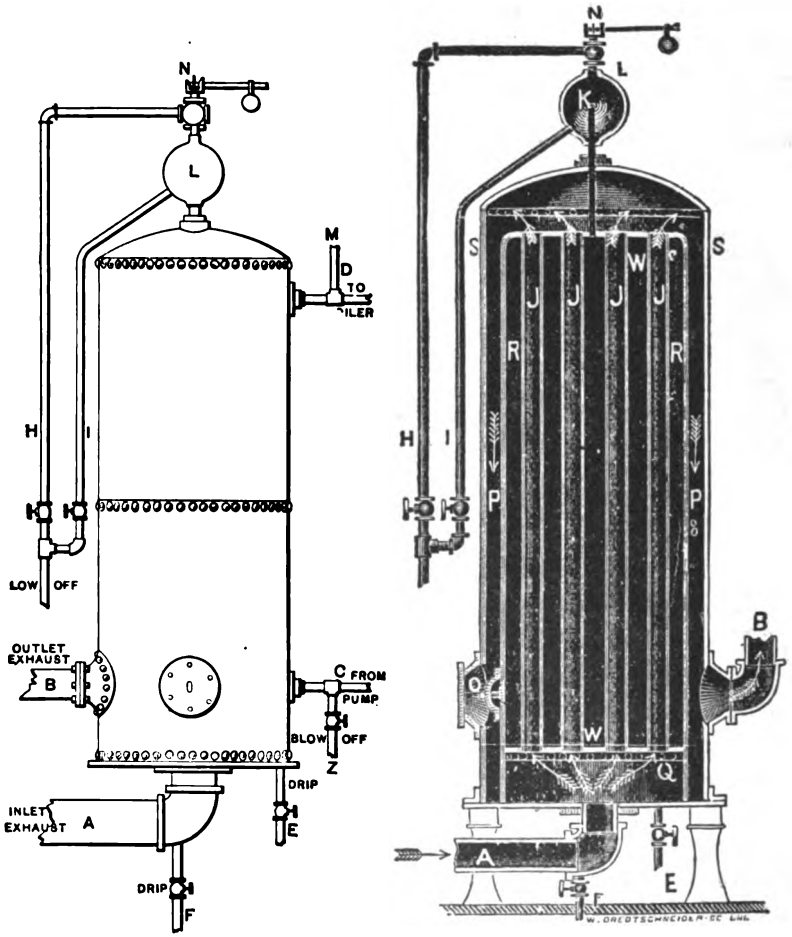

FIG. 491.

which have the steam on the outside and the water within, or the reverse. The open heaters are in some respects the most efficient, since the steam and water come together, and since sufficient heat is often imparted to the water to bring it to

that point at which it will precipitate the solid matter which it contains. This class of heaters have been called lime-catchers. Fig. 490 shows a form of this class of heater in which the water passes over the set of trays within the heater which are surrounded by the exhaust-steam. The hot water deposits its solid matter most rapidly in the thin films in which it escapes over the bottoms of the trays, making removal of such material complete, and the cleansing of the trays easy and rapid. Figs. 491 and 492 show types of the tube- or coil-heaters of the closed class. The tubes are apt to be of copper or brass, in order to be rapid conductors and are curved so as to yield easily to the condition of rapid expansion and contraction to which they are exposed. It is convenient to pass the steam through the inside of small coils, because the only deposit in the small tubes is the lubricant, which is not so difficult to remove. The arched or flexible form given to the tube-plates and corrugation of the tubes also provide for these inequalities of expansion.

Such steam-heaters will act partly as surface condensers if they have an abundance of surface, but care should be taken that the resistance offered to the exhaust should not impose a back pressure upon the engine-piston which should cost more coal to overcome than the saving of fuel caused by the heater. This is a matter of simple calculation when the back pressure is observed with the heater in action and out of action.

322. Flue-heaters or Economizers.—The flue-heater is necessarily a closed heater, and consists of a coil of pipe through which the feed-water passes, while the outside of the coil is exposed to the heat of the gases in the chimney-flue. They are particularly advantageous when the temperature of the gases is unduly high upon leaving the setting, although it may fairly be urged that the boiler itself should have adequate heating-surface to cool the gases, without leaving this to be done by the economizer (Fig. 493).

The advantages of the flue-heaters are that they heat the water to a high temperature, and higher than the exhaust-steam heaters when other things are equal. The exhaust-

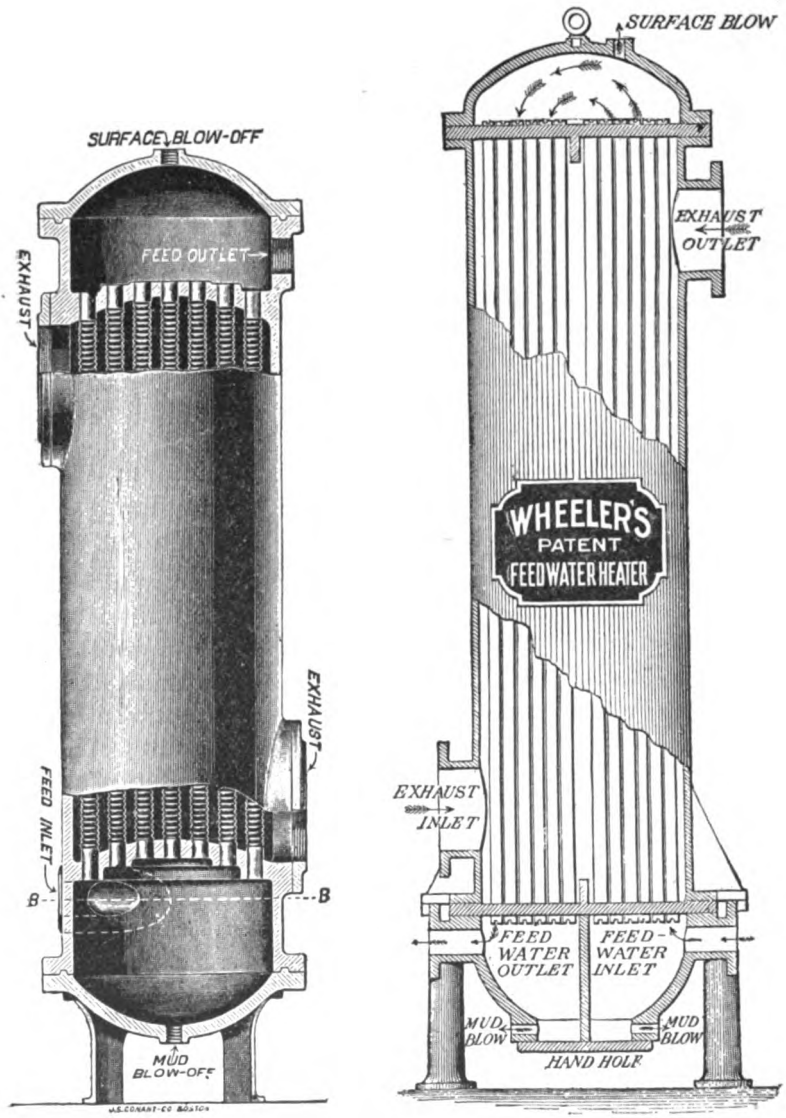
SURFACE BLOW-OFF
FEED OUTLET
EXHAUST
EXHAUST
FEED INLET
B
B
MUD BLOW-OFF
SURFACE BLOW
EXHAUST OUTLET
WHEELER'S PATENT FEEDWATER HEATER
EXHAUST INLET
FEED WATER OUTLET
FEED-WATER INLET
MUD BLOW
MUD BLOW
HAND HOLE

FIG. 492*a*.

steam is apt to be at a temperature not much above boiling-point, whereas the flue gases may easily be hotter than 500° Fahr.

The objections to them are:

(1) That the difficulties from unequal expansion are very great, and unless special care is taken both in manufacture and design these will cause leakage.

(2) They are exposed to corrosion on the outside by the gases from most of the fuels, and particularly when a light covering of soot has coated the outside of the coil with an absorbent covering which holds moisture and acids in contact with the metal.

(3) When feed-water is not circulating through the coils so as to keep them full of water, they will make steam which will escape through the check-valve into the boiler, leaving a part of the heater exposed to overheating.

(4) They require to be cleansed from soot or tarry deposit by careful scraping in order to be kept efficient. The formation of scale within them will take place with waters having solid matter in them. Fig. 493 shows the usual form of economizer with provision for external scraping, which becomes particularly easy with the vertical type.

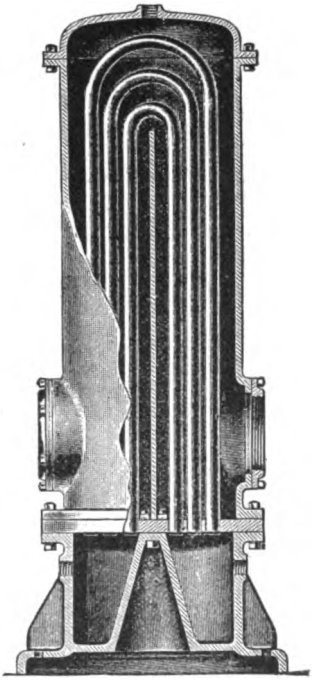

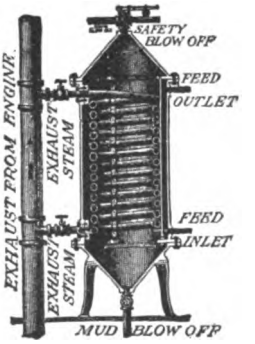

FIG. 492*b*

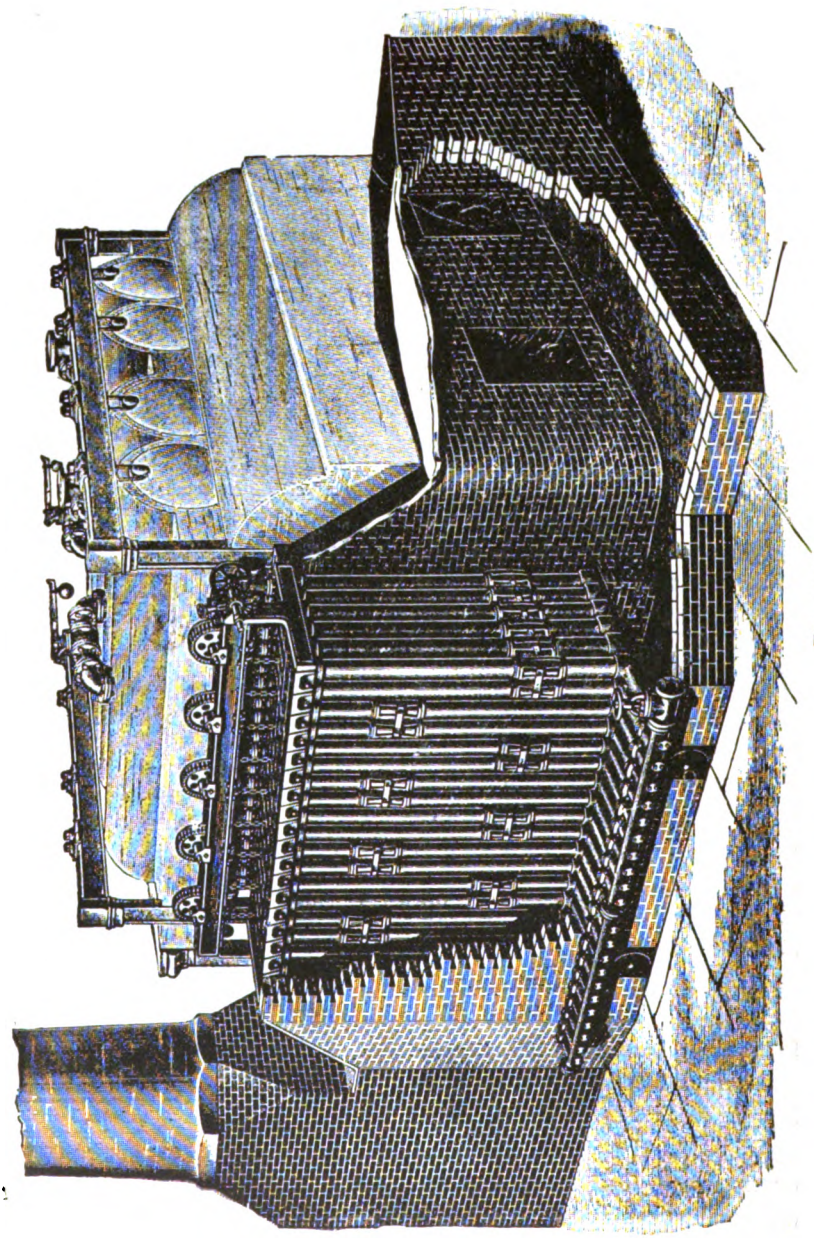

FIG. 493.

In order that a feed-water heater may be efficient it requires to have an abundant contact-surface, and care should be taken, in selecting a heater, to secure this feature of its design. The standard proportion of an economizer is that there should be 9 feet of 4-inch pipe for each three horse-power in the boiler.

Where the engine is a condensing engine the feed-water will be heated by the operation of condensation to a temperature of about 100°. The feed-water heaters of the exhaust-steam class will heat the feed-water when well designed up to from 180° to 210°. Hence it would appear worth while even with a condensing engine to save the heat represented by heating the feed-water from 100° to 200° Fahr. in round numbers, by interposing a heater between the cylinder and the condenser.

323. **Automatic Feeding Apparatus.**—It has long been sought to arrange a mechanism which should be operated automatically, and as the level of the water in the boiler might vary, to have this change of level operate the feeding mechanism without human intervention. If automatic feeding in a reliable form could be combined with automatic stoking, the labor of the fire-room would cease to be manual and become supervisory only.

It has been sought to obtain automatic feeding by several methods. They all make use of the direct-acting pump, and provide that the variation in water-level shall operate its steam-valve, so that the rise of the water-level above the normal shall shut off the pump, and a fall below shall turn on more steam and speed it up. This has been secured, first, by the expedient of having the steam-valve operated by the pressure of a column of water against a flexible diaphragm. When the water-level was normal, or above it, the bottom of this column of water was sealed in the water and thus kept full by the steam-pressure. When the water fell below its opening into the water-space of the boiler, the column emptied its water into the boiler, and thus withdrew its pressure from the diaphragm, which yielded to an exterior weight and opened

the valve. A second method has been to insert in a pipe a rod of some metal with a high coefficient of expansion. When the outlet from this pipe into the boiler was below the water-line, water was forced up into the tube, and its high specific heat and radiation kept the rod cool. When the pipe was emptied by the fall of the water-level in the boiler, steam replaced the water around the rod, caused it to lengthen, and turned on the valve. A third plan has been by means of floats whose rise and fall within the boiler transmitted motion outside through a proper stuffing-box to slow down or start up the pump. A fourth plan, which has been used since the development of the electric motor for pumping, has been to make the rise and fall of the water-level operate a float to throw out or in a switch or a resistance-coil, in the circuit driving the pump, whereby the action or speed of the pump should be made to vary.

The fifth method has been to have the feed-pump operating continuously, and to arrange that its suction should draw from the supply of fresh feed-water only when the water-level was below a certain point, determined as before by the seal of a pipe by the water in the boiler. When the water was above the opening of the sealed pipe the pump simply circulated the boiler-water without drawing in a fresh supply.

The idea of an automatic or magazine feed-pump is a very old one, and will be found applied to early boilers (Fig. 360), for which the feed was supplied from an elevated reservoir at such a height that the light pressure within the boiler could not balance the water-column, but water would flow in when a valve was lifted by the water in the boiler through the operation of a float.

The objection to the automatic-feed principle as thus far applied has been that it is not entirely to be depended upon, or is not automatic in the true sense.

324. Blow-off Valve.—The boiler requires to have a pipe connected to its lowest and coolest point to allow the boiler to be emptied for inspection and cleaning, as well as to be used for the removal of part of the contents of the boiler into

the drainage system of the plant while at work, if this is desired. Such a pipe will be called the blow-off pipe, and will have in it, and as close to the boiler as convenient, the blow-off cock or valve. From its location at the lowest and coolest point the solid matter, mud, and precipitated salts will gather in its neighborhood, so that when opened with pressure on the boiler a rapid rush of the hot water out through the valve and pipe will carry away some of the material of this sort. For this reason the blow-off valve is located in the mud-drum of boilers which have one. A gate or cock-valve is to be preferred for the blow-off valve, because it is not liable to become clogged from the precipitation of salts which may harden about it, and for this same reason also it is desirable that the pipe should be of generous size, so that it may easily free itself of the accumulations which may take place within it. It should rarely, even in a small boiler, be made less than 2 inches in diameter. In brick-set boilers, where the blow-off pipe must pass through the combustion-chamber, it is particularly liable to become burned out by the overheating to which it is liable if scale gets into it. It is for this reason quite customary to cover it with some incombustible and non-conducting material in that part of its length where it is exposed to flame and hot gas (see Figs. 367, 402, 421, 431, 456, 459).

In boilers using salt water the blow-off cock must also be used frequently in order to reduce the percentage of salty matter which is forced into the boiler with the feed-water, but cannot go out with steam. This opening of the blow-off valve is called blowing down, and permits the concentrated solution to be diluted by pumping in water to replace that which has blown to waste.

325. The Safety-valve.—All modern boilers have attached to the steam-space a valve opening outwards and held upon its seat by a known force which is intended to balance the pressure upon its under side. It is called a safety-valve and is intended to act as a relief-valve, opening for the relief of pressure within the boiler when that pressure shall exceed the

resistance of the exterior force which holds it shut. A valve of this type is, however, not a safety-valve in the true sense, unless as it lifts it should have sufficient area to allow steam to escape through the opening which will be made as fast as the boiler can make steam with all other outlets closed. In other words, the pressure in the boiler should not be able to rise above that for which the valve is loaded, even if all other outlets are closed and the fire burning with its normal or even its maximum capacity for steam-making. Comparatively few safety-valves are of this capacity, for reasons of cost and convenience, but the presence of such a loaded valve acts as an alarm to give warning of the passage of the known pressure-limit, so that means may be taken to stop the generation of steam and an accumulation of pressure.

Furthermore, as the pressure does accumulate under the valve when open and blowing, it has a tendency to lift the valve higher and enlarge the outlet in many of its forms. Most of the legislative requirements concerning boilers compel a safety-valve of an accepted construction.

326. Forms of Safety-valve.—The safety-valve for boilers is likely to be in one of five forms. Historically the first, now practically not used in America, is the method of weighing the valve down by a direct weight, resting on its back or suspended to it from below (Figs. 400 and 402). The difficulty of this form is that with large valves and high pressures the weight to be used becomes considerable and inconvenient. In English practice, where the direct weight is still preferred, the inconvenience is mitigated by using a number of smaller valves to secure the necessary area and subdivide the weights.

The second form is to replace the weight with a spring whose intensity can be graduated. This avoids the bulk of the direct weight, but is open to the serious objection that as the valve lifts the resistance of the spring increases. The springs are also liable to corrosion, which makes them stiff. This form was used in many cases where jar from motion was to be experienced, but has practically been entirely superseded by the fifth form.

The third is a very frequent type, in which the spindle of the valve is held downwards by the action of a lever carrying the resisting weight with a long arm, while the effort of the valve to overcome the weight has but a short lever-arm. This does away with the inconvenience of a great weight, and makes adjustment of the pressure to hold the valve shut both easy and rapid. It is probably the most widely prevalent form of safety-valve for stationary boilers. The objection to it is the tendency of the lever in its rise to cause the valve to become jammed from the oblique motion around the fulcrum of the lever. It may also be urged as an

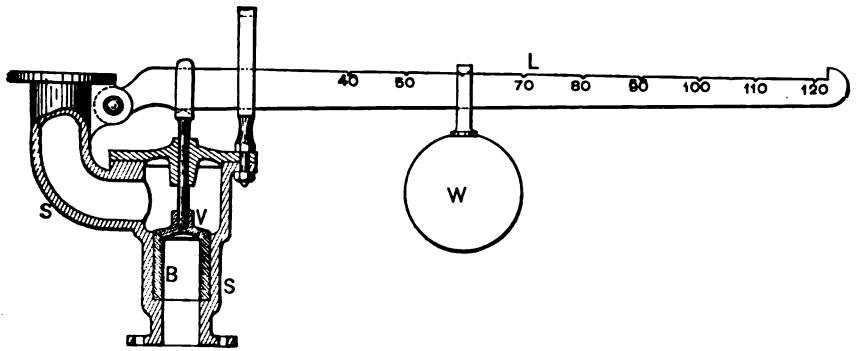

FIG. 494.

objection to it that the weight may be so easily increased by sliding out the regular weight or by hanging other weights upon the lever. It is also easy to stop the valve from operating by wedging it so that it cannot open under any pressure whatever. The lever-valve construction lends itself to a desired use in river-boat practice. By attaching a rope or chain to the end of the lever and leading it up over a pulley, with a weight on the free end, that weight acts negatively and takes weight off the valve, and lightens the pressure at which the valve will open when the engine is at rest. By hanging this second weight up so as to leave the rope or chain slack by which it is attached to the lever, the entire counterweight comes on the lever, and full pressure is restored for regular running.

For locomotive use before the fifth form was introduced it was usual to replace the weight by a spring which acted at the end of a lever to hold the valve down. This spring was

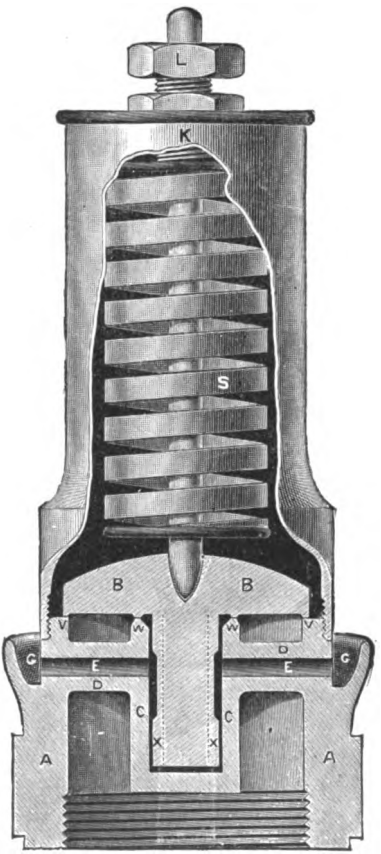

FIG. 495.

arranged so that the tension upon it could be varied by the engine-runner. It never became widely used outside of locomotive practice.

The fifth form is what is called the pop or reaction safety-valve, which is practically universal in locomotive practice, and is widely extended elsewhere. The principle of the pop-

valve is that, as the valve proper lifts from pressure, the escaping steam, instead of passing out directly from under the valve, must find its way out, after undergoing a change of its direction in an annular groove formed in the valve outside of its inner bearing. The force due to the reaction of the steam in escaping adds an additional effort to lift the valve, increases the opening thereby, and with a given loading the valve will remain open until the pressure within the boiler has fallen perhaps 5 pounds below that at which the valve lifted. The additional area exposed to pressure when the valve lifts causes it to open with a sudden motion which has given it its ordinary name, and it also closes suddenly when the pressure has fallen. Figs. 494 and 495 show types of lever and pop safety-valve.

A failure of the safety-valve is often due to corrosion either of the valve upon its seat or of the guiding-spindle in its guides. The safety-valve, therefore, should be frequently lifted by hand in order to be sure that corrosion has not made it worthless, and a further safeguard is secured by the use of metals in the valve or seat which do not rust together. Nickel has been applied for valve-seats with success by reason of its being a non-rusting metal, and certain bronze alloys are used for the same reason. Data concerning the area of safety-valves will be found in the notes.

CHAPTER XXVII.

CARE AND MANAGEMENT OF BOILERS.

327. The Firing.—The firing of a boiler-furnace is to be done in accordance with the general principles of combustion, and the application of these to fuels which differ so widely makes it difficult to give anything but the most general suggestions. References also have been made in other connections which bear on this subject. The three usual methods of firing are the spreading method, the side-firing or alternate method, and the coking method. The spreading method is to keep covering the fresh and incandescent coal on the grate with thin layers of fresh coal thrown in at short intervals. This is the usual and most successful method with anthracite, where best results are secured when the fire is least disturbed. Side-firing is to divide the furnace into two halves lengthwise and charge the fresh fuel on one, while the other is in its best state of incandescence. This has been referred to under the double Cornish or Lancashire method as a means of keeping up the temperature of combustible gases, and is especially applicable to bituminous coal. The coking method is to divide the fire crosswise instead of lengthwise, and charge the fresh coal containing gas at this front part or on the dead-plate, and push it backwards when the gas has been distilled off by the radiant heat of the fire behind it. The thickness of the fire will be determined by the draft and the quality and size of the fuel. Anthracite fires will be as a rule thinner than bituminous, and small coal will require a thinner fire than the larger sizes. With anthracite firing from 4 to 8 inches is accepted good practice, and with bituminous coal from 10 to 16 inches.

The starting of fires in the boiler-furnace is also a matter which varies with the fuel and the conditions of draft. If the chimney is reluctant to draw from its being cold, it can be helped by starting a little wood-fire in the base of the stack and beyond the boiler-setting, so as to create the first action of the chimney before the resistance of the setting is interposed. It must be remembered that anthracite ignites reluctantly and large quantities of wood are necessary to get it well started.

328. Cleaning Fires.—The interval between cleaning of fires will depend on the rapidity of the combustion and the quality of the fuel with respect to ash. With anthracite fires it is usually only necessary to clean fires in stationary practice about four times in twelve hours. With bituminous coal it must be done more frequently, and often the best results are obtained by pulling the fire about at short intervals, which is fatal to the satisfactory working of an anthracite fire. The cleaning is done by means of slice-bars which break up the clinker and separate the combustible from the incombustible matter, and after the fire is thoroughly broken up the aggregations of incombustible matter are removed by a rake or hoe. What remains is then spread evenly over the grates, and a fresh charge of fuel thrown on the fire. The ashes and clinker drawn out from the furnace will then be extinguished and cooled by a jet of water from a hose, and will then be removed. Care must be taken in handling the extinguishing water that it should not strike by accident any of the hot castings about the ash-pit, which it would be certain to crack.

329. Banking Fires.—It is usually the least trouble and expense to bank the fire at the close of the day, or when the fire is to be kept over for some hours during an interval of inaction. After the fire has been cleaned, what remains in the grates, instead of being spread evenly, is piled against the bridge-wall and upon the back half of the grates, leaving the front part bare. Fresh coal is then charged in a thick layer over the banked fuel, and the fire is left with the ash-pit doors closed, the fire-door open, and the damper closed, or nearly so.

The closure of the ash-pit and the access of cold air above the fire make the ignition of the bank of fresh coal very slow, so that several hours will elapse before it has become ignited, and even then it burns slowly and not actively. At the end of the time, determined by the quantity of fresh coal used in banking, the fire is cleaned and spread, and is ready for a new campaign.

330. Regulation of the Fire and Pressure of Steam.—The regulation of the fire is done by controlling the access of air to it whereby combustion is stimulated or checked. The closure of the ash-pit and the damper check the fire, and to open them stimulates it. The fire-door opening into the furnace above the grates is a further means of controlling the fire in part, since by opening it cool air comes in to lower the temperature in the fire-box, and without passing up through the coal it does not stimulate combustion. The cool air further checks the making of steam by cooling the products of combustion, and acts by contact as a cooling medium passing over the heating-surface and through the tubes. It has already been noticed that this is not a desirable thing to do, by reason of its effect on the metal of the boiler, but it is an efficient method of control.

The steam-pressure is controlled by the fire principally, but it can also be regulated by the use of the feed-water. The introduction of cool water cools the contents of the boiler, and checks partly or altogether the formation of steam. The presence of additional water, furthermore, makes additional material to absorb heat-units, so that great skill is to be shown when known variations for demands for steam are to be expected, by so controlling the times for feeding and the amounts fed that this storage of heat shall be utilized to its best extent.

331. Cleaning the Heating-surface Outside.—The metal of the heating-surface in most boilers becomes coated with a scale of some non-conducting character caused by the light dust and ashes attaching themselves to the plate, and particularly when tarry matter is present in the products of combus-

tion. Within the tubes of a tubular boiler a deposit of dust and ashes will also take place, perhaps choking the tubes or

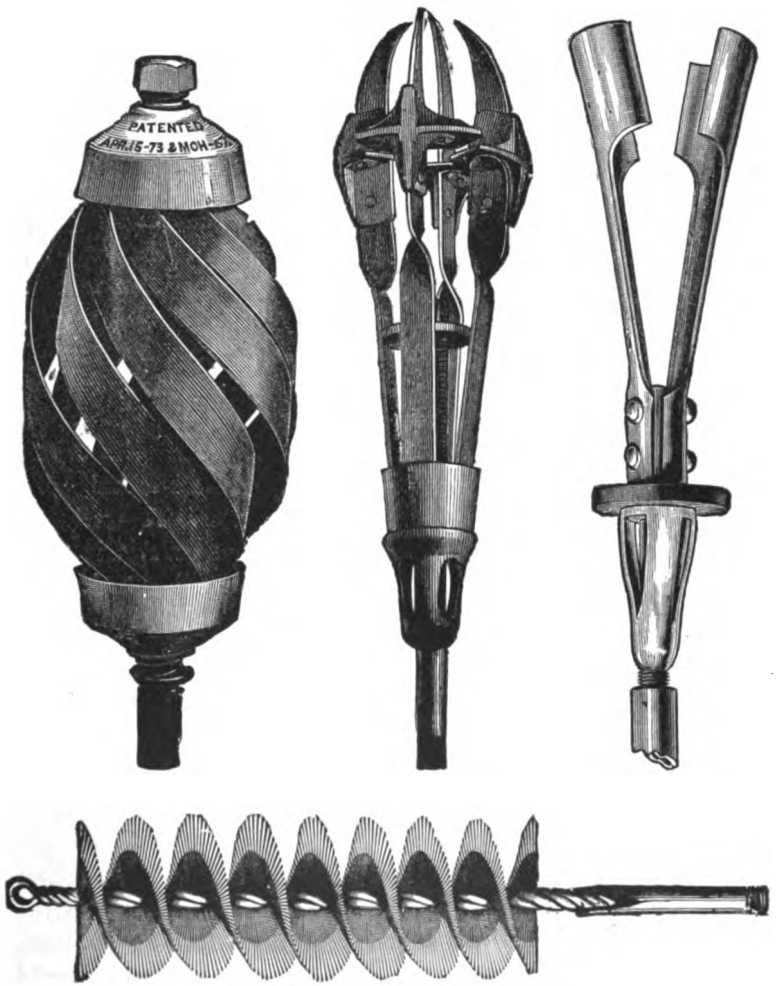

FIG. 496.

at any rate rendering them less efficient. The cleansing of these exterior surfaces from the soft scale is done either with scrapers, or by brushes (Fig. 496), or by means of a

jet of high-pressure steam or air directed upon the surface to be cleansed from a nozzle (Fig. 497). The tube brush or scraper is passed through the tube and scrapes the surface clean, but the steam-jet acting at high velocity seems to have a special cleaning effect, and is used either independently or in connection with the scrapers. Special forms of such steam-cleaners are used in which the jet receives an annular form and a spiral motion (Fig. 497), but very good results are obtained by

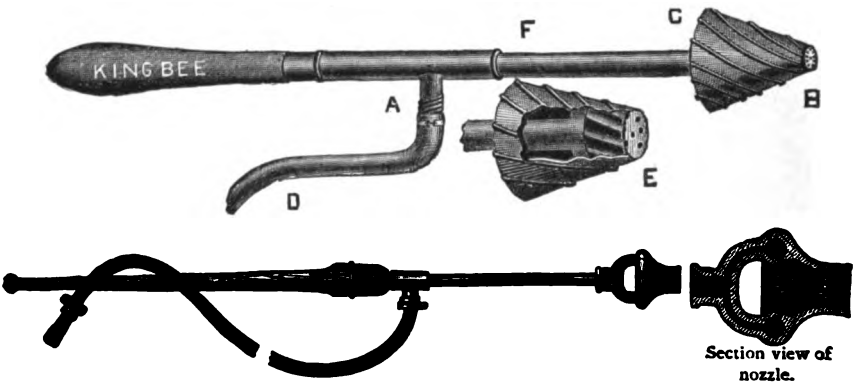

FIG. 497.

means of a simple short-length of pipe coupled to the steam-space in the boiler by means of a flexible hose. The settings of sectional boilers usually have openings made through their walls in which pipes are built, and through which pipes the cleansing jet of steam can be inserted at different levels, and so keep the surfaces up to their efficiency. The tarry deposit sometimes refuses to be moved by the steam-jet, when, of course, scrapers must be used.

Locomotives are more often cleaned by air-jet, because of the danger to the person cleaning if any accident should occur to the hose joints while he is confined within the fire-box. With steam in use under these conditions, the cleaner would be burned before he could escape, while with compressed air there is no such danger.

332. Boiler-scale or Incrustation.—It will be apparent that any solid matter in solution or present in suspension in

the water fed to a boiler will remain behind in the boiler when the water is evaporated, because the steam will carry none of this material with it. If the salts in the water are of a soluble character, the process of evaporation will tend to concentrate the solution which remains in the boiler, and if they are insoluble they will gradually fill up the water-space. Concentration of soluble solutions is prevented by the process of blowing down (par. 324), but for the removal of the insoluble matter some special procedures or appliances must be used.

The solid matter which gives trouble inside of boilers is introduced either in suspension or in solution. When it is in suspension the water is called a muddy water, and the proper procedure is to filter the feed-water for the removal of such suspended matter. This gets rid of the difficulty from this mud outside of the boiler altogether by preventing it from getting in. If this is inconvenient, the mud-drum will be a necessary feature of the boiler, and blowing off the accumulations must be practised at frequent intervals.

A class of salts enters the boiler in solution, but is precipitated as an insoluble precipitate on boiling. These are among the most troublesome, because they are really formed within the boiler itself, and consequently can only be prevented from getting in by chemical reactions of some magnitude. The salts of this class are the carbonates of the alkaline earths, lime and magnesia, and the sulphate of lime, which is the most troublesome of all. The feed-waters which are usually drawn from fresh-water sources are not likely to contain much sodium or potassium, which form the soluble salts, but in sea-water the chloride of sodium and magnesium, which are both soluble, are elements which give it its salty taste. Silica, alumina, and organic matter are to be found in some of the Western waters, or where the wash of surface-water may have come into the source.

Great difference in the difficulty of the problem of dealing with boiler-scale results from the form which the scale takes. The carbonates of lime and magnesia are a mud—white or grayish in color when pure. They have no cementing ten-

dency and can be treated like suspended impurities. Silica and the sulphate of lime, however, are crystallizing bodies in the water which form into a hard adhesive crust, and not only this, but they have the property of causing the carbonate scales to crystallize with them and add to the extent and thickness of the adhesive coating. The following table shows the properties of these most prevalent scales, and their degree of solubility at various temperatures. They enter the boiler as the bicarbonate, which is soluble, but on boiling one part of carbonic acid is expelled, and the protocarbonate which remains is the insoluble form. The carbonate of magnesia is

Salt.	Temp. Deg. Fahr.	Authority.	Parts by Weight of H_2O to Dissolve 1 pt. of Salt.	Grains to Gallon.
$CaCO_3$ and $MgCO_3$	62	Bucholz	41,600 to 62,500	1.4 to 0.9
" " "	212	"	16,000 to 24,000	4.25 to 2.75
" " "	285 to 300	Cousté	Insol.	0
" " "	62	B.	461	126
$CaSO_4$	95	Regnault	393	178
"	212	R. & B.	460	126
"	290	R.	Insol.	0

a light flocculent powder which usually floats at or near the surface of the water, rather than sink to the bottom. Organic matter is apt to act in the same way, especially when it is of a vegetable character.

333. Inconveniences Due to Boiler-scale.—The presence of the solid matter in the water of a boiler may do harm in one or more of four ways.

(1) If it forms hard and solid over the heating-surface, it adds a non-conducting thickness to the evaporating-surfaces, so that an excess of fuel is burned to make the required quantity of steam.

(2) This non-conducting covering causes the metal of the boiler to be overheated because the water does not cool it. This may produce an injury which is general or local. The general deterioration all over comes from an oxidation of the plate on the outside, because its high temperature makes the

oxygen reactions more rapid than they would be if the plate were cool. The local injury comes from the presence of a thickness of scale at points exposed to intense action of fire, whereby they become practically red-hot and softened, so as to yield under the internal pressure. Bags or blisters result from this trouble, which is aggravated if grease has become mixed with the scale at the point in question. A lump of scale is sometimes carried by circulation and dropped in a special place, and becoming attached there, a local overheating begins underneath it.

(3) The scale which crystallizes, accumulating in feed-pipes, blow-off pipes, water-gauge connections, and the like, is occasion for trouble in the use of these appliances (Fig. 483). In sectional boilers, besides the annoyance from the first two causes, the presence of scale impedes the rapid circulation, and increases the troubles which are met from this difficulty (Chapter XXI).

(4) The presence of the floating mud or flocculent precipitate causes the boiler to prime, because the steam-bubbles must force their way through the scum at the disengaging-surface, and in doing so water follows upwards with the steam, and is entrained mechanically through the steam-pipe.

The ill effects or injuries caused by scale are to be mitigated or avoided by methods which can be grouped under three heads. The first is the removing of the scale which is allowed to form. The second is the preventing of the solidification of the scale either by changing its character or by other means, and then causing its removal by methods of the first class. The third is the purification of the feed-water from its impurities before it enters the boiler.

334. Removal of Boiler-scale.—When the scale is a mud and without tendency to cake upon the heating-surface:

(1) The boiler can be allowed to cool down full of water, and when cooled emptied through the blow-off pipe. By removing the manhole and entering the boiler with hose-jet and brooms, the accumulations of soft scale can be washed out and the boiler is clean.

(2) The mud can be prevented from accumulating and with an efficient mud-drum can be removed, by blowing the boiler down at short intervals during the day, and blowing it out completely at the end of a week or oftener. The objection to this method is that the scale which is not thoroughly washed out by the outflow through the blow-off pipe will dry on the heating-surfaces in cakes which it is difficult to remove when it has once solidified.

When the scale is of the character which cakes on the metal of the boiler, due to the presence of sulphate of lime, two methods can be used.

(1) The boiler being emptied of water and cooled empty, a brisk fresh fire is started under the empty boiler. The effect of this is to expand the iron at a rate faster than the scale, and causes the latter to crack off in flakes, which are then swept out after the boiler is cooled again. The objection to this is a fatal one, in that it is very hard on the boiler and injures it.

(2) A more usual plan is to allow the boiler to cool, empty it, and enter it through the manhole with what is called a scale-pick. This is a species of hammer with both faces formed to a wedge, and with it the scale is struck and broken very much as a film of ice is broken off the exposed stones of dwellings or pavements in Northern cities. The objection to this method is that the forcible removal of scale carries with it the film of oxide of iron which is formed on the inside of a boiler, and which adheres to the scale rather than to the iron. The ultimate effect is to thin the iron by this continual removal of the oxide film.

Belonging to this same class of methods is the use of an apparatus in the form of a trough or false bottom inserted within the boiler, and so arranged as to catch the precipitate which is moving with the currents of circulation. When the solid matter has fallen into such pan or trough it no longer is exposed to circulation, but lies where it has fallen, and therefore does not have a chance to get to the real heating-surfaces. This, of course, is a method available in shell boilers

only. For the flocculent or floating type of scale a blow-off connection at the surface of the water in the boiler has been found convenient. This has been arranged to have a trumpet-shaped mouthpiece whose amplitude is greater than the normal range of the water-line in blowing down, so that when the attached valve is open, surface-water flows into the trumpet mouth and out of the boiler, carrying with it the floating scum. In sectional boilers the main dependence against the adhesion of scale within the small units which make it up is the rapid circulation (see Chapter XXI), but special cleansing tools have been devised to meet this problem, in which an appliance driven by steam or air can be introduced within the tube. It has cutting or impact tools which break up and loosen the scale so that it can fall out or be swept away.

335. **Prevention of Scale-formation.**—There are three great methods which are used to prevent the scale from forming a hard adhesive crust or coating. The first of these is to introduce in a boiler some reagent or material which shall prevent the scale from hardening or crystallizing by a sort of mechanical reaction. This is the basis of methods which have been used involving the introduction of sand, sawdust, malt-grains, and similar material which shall form the nuclei around which the scale is to solidify in the form of balls or larger grains, and remain in a form easily removable.

The second method has been to make use of some material in the boiler which shall act as a varnish caked upon the surface of the boiler, so that the adhesion of scale should be made more uncertain. The introduction of kerosene, starch, or the real varnishing of the surface with some suitable composition all operate in this way. Perhaps kerosene is one of the best known of the reagents of this class, and for many waters seems to be the best to be used in this way. It is introduced either gradually by a small connection to the feed-pipe suction, or a charge is put in at intervals. Mineral oil or grease does not meet the case, by reason of the tendency

which it has to adhere itself to the heating-surface, and by keeping water from contact with the metal cause overheating as badly as the scale itself, if not worse.

The third method is to introduce a reagent which shall act chemically on the precipitate either to change its crystallizing or solidifying character, or to change an insoluble into a soluble salt. The reagent may either be an acid or a salt. Among the acids, tannic and acetic acid are perhaps the most usual and preferred by reason of their reaction upon the sulphate of lime, and the relatively mild action which they have upon iron if the acid should not find sufficient base in the feed-water and remain free. These acids are introduced in the form of brewer's grains, molasses, oak-bark, etc., or in the form of a liquid or crystalline acid. The difficulty with this method is the danger to the metal of the shell itself. In some few places where an acid water has been at hand it has been alternated or mixed with the basic water so as to oppose them to each other's action.

The salts which are used are either the carbonate of soda, the chloride of barium, the tannate of soda, and the sodium triphosphate. The reactions of these with the sulphate of lime form a non-adhesive precipitate, and the soluble salt which results from the reaction with the lime is removed by blowing down. The proportions of salt to be used with any water are to be determined on the basis of chemical analysis. To this class belong also the methods of which the use of zinc suspended in the water is a type. While the scientific basis for the practice is not clear, its practical success in many cases for the purpose desired cannot be questioned.

336. Previous Purification of Feed-water.—The method which stands on the highest scientific plane with a boiler plant which must use a bad feed-water is to prevent the solid matter from getting inside the boiler at all. There are several methods for attaining this object.

(1) The use of such forms of feed-water heaters as may properly be called lime-catchers. The feed-water is heated

in the heater to a point at which it precipitates all or most of its solid matter (pars. 321 and 322).

(2) The use of the methods of surface condensation which prevail in marine practice, whereby the same distilled water is

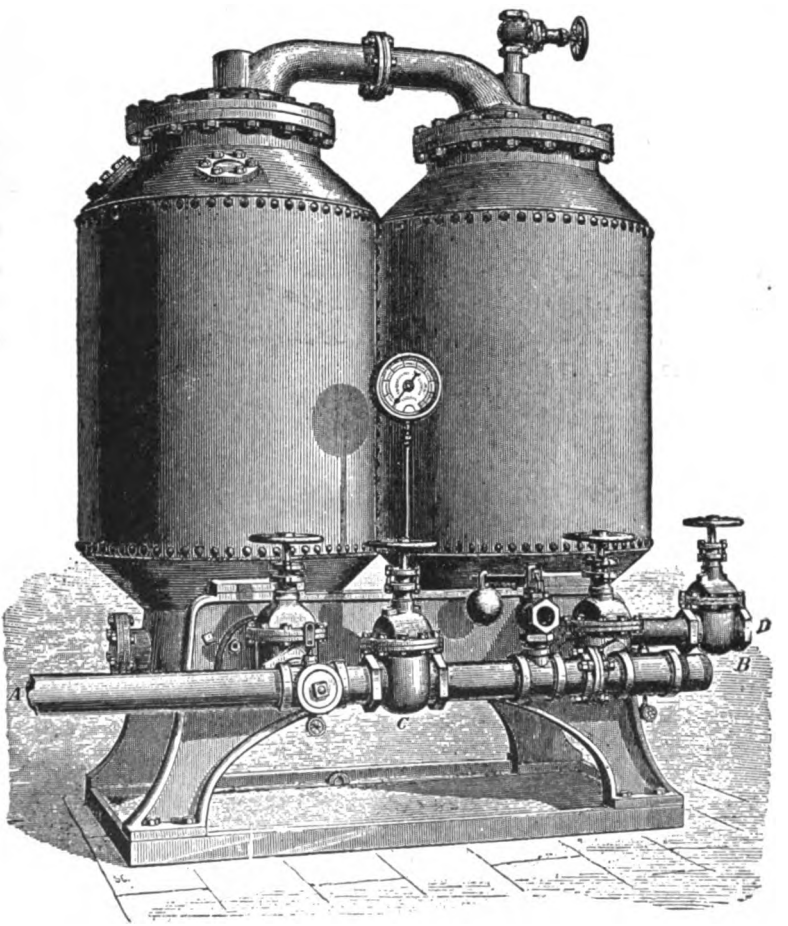

FIG. 498.

used over and over again and no additional solid matter is introduced with the feed-water, except with so much of the latter as may have to go in to supply leakage and waste

(Figs. 70 and 71). The use of impure water to cool the surface condenser is entirely admissible.

(3) A previous purification of the feed-water by chemical means. This means that the feed-water to be used in any day is introduced into a tank, and into such tank is thrown the necessary reagent to throw down the solid matter in the water. The milk of lime or hydrate of lime will transform the soluble bicarbonate into the insoluble protocarbonate, and the chloride of barium will form the sulphate of barium with the sulphate of lime. The precipitate thus formed can either be filtered out, or it can be allowed to settle and only the clear liquid is pumped into the boiler which contains the soluble sulphate constituents which remain after the reactions. The disadvantages of this method are obvious in the cost of the tankage, and the room which it will occupy, and the cost of the reagents used in the process

FIG. 499

337. Filtration of Feed-water.—The filtration of feed-water either for the removal of suspended solids, or of pre-

cipitates, can be done in open filter-basins, or in close or pressure filters. The open filter-basin is the usual water-works method, whereby the water is made to pass through layers of gravel, sand, and charcoal in succession, and in each of which a certain proportion of the suspended material is caught and only the clear liquid passes through. The pressure filters operate on the same principle of forcing the feed-water through layers of successive fineness, but this will be done in a closed tank and under pressure instead of depending on the simple head due to gravity. Most of these filters operating under pressure are arranged to be reversible either by three valves, or a system of equivalent pipe-connections, so that the accumulated mud in the layers of the filter can be washed out by such reversed current. Otherwise provision must be made at intervals to remove the filtering material, cleanse it, and replace it, during which the water either goes unfiltered or is filtered through a duplicate or reserve apparatus (Figs. 498, 499). Consult also par. 197 on oil-filtration.

338. Deterioration or Wear and Tear of Boilers.—The conditions to which a boiler is exposed in service tend to wear it out. Many engineers have felt so strongly on this point that they have proposed to limit the life of a boiler in use, and to specify that a boiler is good for ten years, may be run at reduced pressure after fifteen years, but should be thrown out at the end of twenty. The causes which tend to wear out a boiler are partly inherent and unavoidable, and partly accidental so as to be avoided by care. The avoidable ones are usually acute forms of the sources of deterioration which are inherent and unavoidable. Deterioration of boilers is caused by overheating, by unequal expansion and contraction, and by corrosion.

339. Overheating of Boilers.—An injury to the heating-surface of a boiler from overheating is usually due to carelessness either in permitting the water-level to get so low as to expose the heating-surface uncooled, or to the presence of scale or grease. These have been already referred to in the previous paragraphs. The furnaces of internally-fired boilers

and the tubes of sectional boilers are particularly liable to injury from overheating caused by grease. In sectional boilers, besides the oxidation due to overheating, a strain of great magnitude is set up in the straight-tube boilers, where the tubes tend to become of unequal length. In some forms of sectional boilers also, in which disengagement is inadequate and circulation impeded, a section may become overheated because the water cannot reach the metal. Sectional boilers whose units cannot be cleaned are especially open to the danger of overheating.

340. Unequal Expansion and Contraction of Boilers.— The intense action of the fire upon boilers tends to raise the temperature of the metal forming them, while an impact of cold air or cold water produces a tendency to cool and contract that metal. Where this action is local the boiler has a tendency to stretch out of shape, and strains are brought upon its structure which act to wrench and destroy the boiler, causing leakage and deterioration. These changes of shape may produce several consequences.

(1) In fire-tube boilers they cause a leakage of the joints where the tubes are expanded into the heads.

(2) The boiler has a tendency to change its shape, and therefore to alter the distribution or the proportion of strain which comes on its various lugs or supports (par. 266). In shell boilers this change of shape may produce such a superposition of strains as to cause a boiler to give way under them at a point where such combined strains may be concentrated.

(3) If there are any defective welds in the plate of which the boiler is made, contraction of the layers of skin causes that lamination to extend, and finally to develop a blister or bag. In steel plate a blow-hole will be the occasion for similar action.

(4) The contraction and expansion of a boiler with lapped joints produces an effect which has been called "grooving." The effort of the two contiguous plates to flex into line with each other when they are pulled lengthwise (pars. 214 to 218) causes the protecting scale of oxide

of iron to be broken off at the point of greatest flexure. Fresh rust forming there and again broken off by the flexure of the joint results ultimately in the erosion of the metal, and the formation of a groove at this point, whereby the strength of the plate is gradually reduced. Figs. 500 and 501 show a groove of this sort and its location. They are often deep enough to take the blade of a knife, and are to be detected in most cases by its use. They are also revealed frequently by the presence of a stain of oxide of iron upon the scale removed from the plate around the joint. Grooving is made worse when there are acids in the water, and where the flexible part of the shell is joined to a stiffly-stayed or inflexible part, so that the bending action is concentrated. Such a place is the joint of the flange of the head of a boiler with the flat surface of the head.

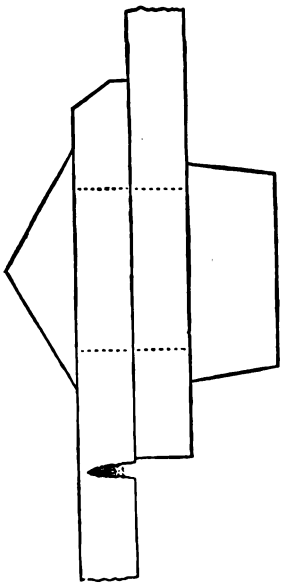

FIG. 500.

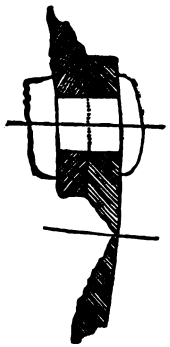

FIG. 501.

341. Corrosion External.—The third source of deterioration of boilers is the corrosion to which they are exposed from the conditions of their use. This corrosion takes place from the inside of a boiler and from the outside.

External corrosion may be the result of any or all of the following conditions:

(1) The action of the hot gases upon the heated plate which forms the heating-surface. If the fire is forced, or if the surface is covered with a thin scale which prevents rapid

transfer of heat, the metal will be heated so that it will react with oxygen in the gases and become rusted or corroded. This difficulty is aggravated by the presence of moisture in the gases, either from the coal, as water present mechanically, or from the combustion of hydrogen to water. This condition is favorable to rapid action on the iron from carbonic acid, or sulphurous acid resulting from the oxidation of carbon, or sulphur in the fire-box.

(2) From leakage. This may occur from seams, around rivets, where the tubes enter the tube-sheets, around the dome-joints, and at the joints of the hand-holes or manholes in shell boilers. In sectional boilers, in addition, will be the leakage caused around joints of the caps and that which is caused by unequal expansion of tubes in their headers. In internally-fired boilers, where the water-legs are closed by massive rings at doors and bottoms, leakage is apt to occur from differences of temperature due to defective circulation. The leakage from valves which are not thoroughly packed or tight upon their seats is also a further occasion for corrosion. This moisture not only corrodes of itself, but is the occasion for forming an active corrosive agent with carbonic acid; and if the water exerts any mechanical action upon the rust, scales tend to loosen and expose fresh surfaces to corrosive action.

(3) The presence of lime in the setting of brick-set boilers is another occasion of external corrosion. The heat of the fire and its gases causes the lime to become calcined to the hydrate, and in this form it is likely to exert a corrosive influence where it touches the metal.

External corrosion is to be detected by careful inspection, and the setting of the boiler should be such that this inspection should be possible.

342. Corrosion Internal. — The corrosion which takes place inside a boiler is more rapid and injurious than the external corrosion. It may be due to one or all of several causes.

(1) The presence of acid in the water undergoing evaporation. The source of this acid in the water is often determined

by local conditions. In the mining districts where sulphur prevails in the coal or in the surface-water and, worse than that, in the mine-water, the sulphurous acid which results is very actively corrosive upon iron. Nitric acid in the form of decomposable nitrates and nitrites is present in waters which have been contaminated with sewage or which contain organic matter. Water from bogs or peaty deposits containing vegetable matter in decomposition will contain the earthy or humous acids, formic, etc.

(2) Perhaps most trouble in boilers is caused by the corrosive action of the acids due to decomposition of the lubricants. The reaction on boiling animal oils, tallow, etc., breaks such material up into stearic and oleic acids, both of which are corrosive to iron. The oil comes into the boiler with the feed-water from condensing engines where pains are not taken to prevent it (par. 197), and will undergo this trying-out process. The active element of corrosion in sea-water and water used in marine boilers is hydrochloric acid, which results when the chloride of magnesia present in sea-water is boiled. The heat decomposes the chloride into the hydrate of magnesia and hydrochloric acid, which latter attacks the iron.

(3) From galvanic action between the iron of the boiler and some metal which is electropositive to iron. Such metals are copper and brass, which form with iron a galvanic couple, and in waters containing even weak acids, like carbonic acid, the iron undergoes oxidation and corrosion. Such metals for galvanic action would be found in copper stay-bolts, tubes, ferules, and even in brass mountings of fixtures for feed-connections. Sea-going boilers are particularly liable to this kind of corrosion by reason of the presence of the acids in sea-water, and it has been found a convenient thing to hang a piece of zinc in the water-space of such boilers in order that by its presence, which furnishes a lower electric potential, the zinc might be the element attacked rather than the boiler itself.

(4) Distilled water containing carbonic acid seems itself

to be corrosive of iron, under the conditions which prevail within a boiler. Laboratory experiments have not always been conclusive on this point, except with respect to water containing no air but carrying carbonic acid.

(5) The water seems to have an erosive action mechanically against surfaces upon which it is thrown violently by the currents of steam in which the water will be carried in drops.

Spattering followed by drying of the spattered water seems also to wash off and loosen the scale of oxide of iron and produce the effect of corrosion.

The corrosion due to water is to be expected below the water-line or where the mechanical action of water may make itself felt near the water-line in the steam-space or in the pipe-connections.

Corrosion, however, is often met in the steam-space of the boiler and manifests itself with somewhat of capriciousness. It has been found that a boiler in the steam-space may be kept quite hot by the non-conducting covering over it, and sometimes causes the corrosion to manifest itself more rapidly by reason of the high temperature producing a considerable expansion, and at a rate different from that of the oxide of iron, so that the oxide is cracked off and fresh surfaces exposed.

343. Pitting, Wasting, and Grooving.—The corrosion of a boiler on its internal surfaces usually takes place in one of three forms. The wasting is a gradual thinning of the plate all over, due to a uniform acid action whereby the iron is dissolved. It is not always easy to detect this, except by close inspection of the joints, and the indications around the rivets which show what the original and unreduced thickness of the plate should have been.

Pitting is a curious and capricious eating of the plate in spots. The reasons for local corrosion of this sort are not easy to find. It is doubtless often due to lack of homogeneity in the plate, so that it has been more exposed to yield to corrosive influence where cinders or similar impurities are present. Mechanical errosion is apt to produce the effect of pitting.

Grooving is the corrosion which has already been referred

to in paragraph 340 where the changes of shape cause a mechanical breaking away of the oxide of iron formed, so that fresh surfaces are continually exposed. When corrosive tendencies are present in the water, grooving goes on so much the more rapidly.

It is a matter of discussion as to the best preventive of corrosion in boilers which are to go out of use. Some advocate the plan of preventing access of air by filling the boiler full of water. Others dry out the boiler by putting a charcoal fire in a brazier within it which disposes of the oxygen also, and any remaining moisture is absorbed by hydrate or chloride of lime. Then the boiler is closed. This is the English naval practice.

Minute and painstaking inspection of the interior surfaces of a boiler is necessary if danger from corrosion is to be guarded against.

344. **Repairs. General.**—The repairs to a boiler are of the same nature as the operations in its construction so far as leaky seams or tubes and joints are concerned. The leakage at a tube-joint can be prevented by expanding once or twice, but after that the metal becomes hard or brittle and further expanding cannot be done. Locomotive-tubes are particularly liable to trouble of this sort, and the custom has prevailed of cutting the tube off at its two ends and inserting a short length at one end which should bring fresh and unfatigued metal to make the joints at the tube-sheets without renewing the entire tube-body. The piecing out of the tube is done by making the two ends to be joined into a male and female cone, and then welding the lap of the two surfaces over a mandrel. In sectional boilers the repairs are usually renewals of the tubes in detail, the regrinding of joints between the caps and headers, and the like. All boilers with manholes will require that the gasket shall be renewed periodically, and usually at each time that the manhole-lid is removed for purposes of cleansing and inspection. On shell boilers, however, it may be necessary to apply a patch.

345. **Patches.**—The failure of a part of the metal in a shell

boiler where the entire plate does not have to be renewed may be repaired by putting a patch on the defective part. Such patches are of two kinds, the hard patch and the soft patch. The patch will be put on a boiler by cutting away the metal which has deteriorated, leaving a hole where the defective metal has been and including enough to come to the solid and unaffected metal around the edge. A piece of boiler-plate is then shaped to the surface which it is to cover, and of a size to cover the hole and lap over its edge so as to be riveted to the shell in lap-joint. The necessary holes are then drilled and the patch is riveted on in place and calked. Such a patch is as good as can be made, but a patched boiler is never as good as the unpatched plate, and the presence of patches usually indicates either defective material or hard usage.

The hard patch just described will be used wherever possible, but it can only be used where riveting can be done. If the patch must be made at a place where riveting is impossible, the patch will be secured in place with bolts, but they will not make the joint as tight as the rivets, and consequently a packing of some sort must be inserted between the two plates and also around the bolts. This packing is usually for the ordinary soft patch a cement of red lead mixed to a paste with oil, and held by being formed into a rope or gasket by working it into unwoven lamp-wick. A rope of this paste and wicking is laid around on the inside of the bolts in the lap of the patch, and is compressed to fill the joint and make it tight. Such a patch, however, is not as reliable as the hard patch, and is liable to blow out under heat and deterioration combined with pressure.

CHAPTER XXVIII.

BOILER INSPECTION AND TESTING. BOILER-EXPOSIONS.

346. Boiler-inspection.—The steam-boiler being an engineering construction and exposed to known strains, it becomes necessary that the person responsible for it should be able to inform himself concerning its condition and ability to withstand these strains. This is to be done by means of inspection by the eye of experience and skill. It involves a knowledge both of accepted practice and of the causes which tend to wear out a boiler, and judgment in deciding how far they have acted either to render the boiler unsafe at its former pressure or unsafe to use under any conditions. A proper and full inspection, therefore, covers all the points which have been made the subject of discussion in Chapters XIX to XXVII hitherto, particularly with respect to corrosion in its various forms, the effects of overheating, and proper care and design with respect to bracing and staying, and also the use of satisfactory appliances for the management of the boiler and the relief of any excess of pressure. Further than this, the inspector should satisfy himself that the boiler is able to withstand its working pressure by exposing it to a pressure somewhat higher than that which it is expected to carry, and then observing whether under such pressure the boiler shows any signs of weakness, deformation, leakage, or similar failure. It is usual to expose the boiler to a pressure-test equal to one and one half times its ordinary working pressure. This is entirely safe with normal conditions, since the boiler was probably designed with a working pressure of one sixth of its calculated bursting pressure (par. 207), so that if exposed to three halves

of one sixth of its bursting pressure, it is only tested to one quarter of the ultimate pressure. There are three ways of making this pressure-test.

347. The Steam Pressure-test.—The steam pressure-test is to close the orifices of the boiler, increase the safety-valve weight, and building a fire under the boiler to make it test itself to one and one half times its working pressure. The advantage of this method is that it exposes the boiler to the conditions of service with respect to strains caused by heat as well as by pressure. The objection to it is evident; that if the boiler is to fail under its test, its failure, by reason of the presence of a volume of hot water, will be the occasion of a disaster. It should only be practised, if ever, where proper public safeguards can be applied.

348. The Hot-water Pressure-test.—The second method is to fill the boiler completely full of water, and with all outlets closed start a fire in its furnace. The water will expand more rapidly than the iron forming the shell, so that the expansion of the water will bring a strain upon the shell from within which can be graduated to the required amount. When the pressure is reached the fire is withdrawn. Water expands $\frac{1}{22\frac{1}{4}}$ of its volume in passing from 60° to 212° Fahr., and the boiler being full is subjected to this expanding strain. This method has somewhat the advantage of having the boiler warm or hot, but in case of failure or rupture of the shell the water escapes without doing great harm, since but little energy is stored in it. The heat condition, however, is not favorable to the inspection of the shell for deformation and leakage, and consequently the third method is more usual.

349. The Cold-water or Hydrostatic Test.—The hydrostatic test as usually made is to fill the boiler completely full of water, and then by means of a pressure-pump, operated either by hand or by power, to raise the pressure of the water in the boiler to one and one half times the working pressure. This is done in the cold; and while the boiler is subjected to this internal pressure it should be carefully examined for bulging of the heads or other deformations, and for leakage

which can be attributed to this tendency to go out of shape under pressure. Leakage will be manifest by the rapid lowering of pressure, since the comparative incompressibility of water makes a slight leakage release pressure very rapidly. By putting a test-gauge upon the connections of the pressure-pump the boiler-gauge can be tested for accuracy at the same operation (par. 304). The only objection which has been urged against the cold-water test is that it is a severe one, and may injure the boiler by overstrain, and that the pressure due to the water brought by the action of a pump is a different and more exacting one than would be brought by the pressure of the steam. The rejoinder to this is that if a weakness is to be developed, it is immensely to be preferred that it should be developed while the test is on than in service, and the large mass of water in most boilers precludes any very great concentration of the pump-pressure. The steam-pressure is a fluid pressure, and the water is as flexible and mobile hot as cold. The laws of most cities compel a hydrostatic test to be made once a year at least of all boilers which are under municipal control.

350. The Hammer Test.—In addition to the hydrostatic test for the resistance of the boiler to pressure and the detailed examination within and without by the eye of an inspector, much information as to the quality of the boiler as a construction will be given by means of a careful and exhaustive examination with a light hammer. The blow upon a loose rivet or a stay which is not doing its work will reveal by the difference in the resonance the difference in its condition, its looseness, or its over-strain. The hammer will also indicate and reveal defects in the metal of the shell, the presence of cracks and similar weakness which may lead to a failure. Where the plate has begun to laminate and the beginnings of a blister have occurred, the hammer-blow will show that the spot is no longer solid at the point struck.

351. Boiler-explosions. General.—The disaster which is most feared in connection with a steam-boiler as a reservoir of accumulated energy is that which is called an explosion.

An explosion results from a very limited number of immediate causes, but a large number of secondary causes may be looked for as bringing about the primary cause.

The primary cause is a failure or rupture of the enveloping shell of the boiler due to a pressure or strain greater than the metal could resist. This interruption of the equilibrium or the destruction of the reserve of metal strength may come about by two different ways.

(1) The boiler may be too weak for the pressure, so that it ruptures at its working pressure.

(2) The pressure may become too strong for the boiler to withstand, and it ruptures at some point above working pressure.

352. Boiler Ruptures because too Weak.—The boiler may fail because it cannot withhold the pressure within it by reason of one of four conditions:

(1) The original pressure at which the boiler has ordinarily been worked may have been fixed too high for a structure of that material, design, thickness, and construction. Such a boiler never was safe from the very first day it was used.

(2) The boiler, originally strong and able to withstand the working pressure, may have become weakened by age, wear and tear, corrosion, or abuse.

(3) The boiler, exposed to normal working strain, may have superposed upon such strain an extra strain of contraction, local and sudden. This may come by low water and sudden introduction of fresh cold water on overheated plates, or cold air acting similarly. This is the rupture of which low water is apt to be the occasion.

(4) A defect of workmanship or material which escaped inspection when the boiler was new may develop in service, and particularly under abuse. The boiler may not be as strong as it was supposed to be, and fails.

It is obvious that the more familiar the inspector is with the construction and sources of deterioration of boilers, the more reliable is his judgment with respect to fixing the working pressure upon an old boiler. It will be seen presently

that if the rupture of the shell is caused by working pressure, the disaster called an explosion will or will not follow according to the combination of conditions under which that rupture takes place.

353. Boiler Ruptures from Excess of Pressure.—The boiler being strong, perhaps new, may have the pressure within it raised to such a point that it is unable to withstand it, and fails at its weakest point. This is the condition of explosions above the working pressure or at pressures approaching the bursting pressure. This group of conditions has been the favorite field for erroneous theories with respect to the disaster called a boiler-explosion. Most of them have been based on the idea that an explosion of some sort takes place within the shell, creating a pressure suddenly within that envelope, which it could no more withstand than if a powder-explosion were to bring suddenly an enormous pressure upon such a flexible envelope. Those who have upheld this idea have explained the explosion from the union of oxygen and hydrogen, which are the gases of the water, supposing them to have been dissociated by an overheated plate occurring with the condition of low water. A second theory of this sort has been that by reason of low water and overheated plate a sudden rise of pressure results from the coming in of the feed-water, causing an explosive sort of pressure within the shell which it could not withstand. A third and similar theory is that the water in the boiler gets into the condition called the spheroidal state, in which the bubbles of water are kept away from the red-hot plate by a film of steam, and which bubbles form steam with a concussive rapidity when that film of steam is forced out. This condition is met in forging or rolling where water is used on red-hot metal and then struck with a hammer.

It is difficult to realize the above conditions in a boiler, and when an explanation without recourse to them is to be found from accepted principles it does not seem necessary to search for less obvious causes.

Furthermore, it can be proved (see Appendix) that in a

boiler containing a relatively small weight of water, and particularly with ample heating-surface, the time required to pass from a low pressure to a higher one, which may be called the dangerous pressure, becomes surprisingly short, so that in the absence of an efficient safety-valve, or where it is inoperative, the steam pressure to rupture the boiler may be reached very soon after the outlets from it have been closed, unless proper precautions be taken with respect to checking the fire.

354. Theory of Boiler-explosions.—When it is remembered that the specific heat of water is unity, so that a large quantity of heat is absorbed in raising its temperature one degree, it will be apparent that when a large mass of water under high pressure lies within a boiler an immense reservoir of available energy is at hand.

The boiling-point of water increases with the pressure, so that if the pressure on the surface of the water in a boiler is suddenly released and drops to atmospheric pressure, or nearly to it, a large quantity of water will form steam-gas upon the release of such pressure without the addition of heat. When, therefore, a boiler ruptures under pressure and full of water, permitting the escape of steam instantly or with great rapidity, the tendency of the stored heat in the water is to cause it to form steam under the reduced pressure with great rapidity. The formation of steam-gas from water is easily comparable under these conditions to the formation of carbon, sulphur, and nitrogen gases in the combustion of gunpowder. Hence the rupture of the shell causing a release of pressure on the water brings about a condition analogous to the touching of a flame to a gasifying substance like powder, and the water flashing into steam-gas is the thing which explodes. If this operation is retarded, the energy is gradually released in forcing the water out through a small hole, and no disaster follows the rupture. This is the element of safety of the so-called sectional boilers.

355. Energy Resident in Hot Water under Pressure.—It can be shown by a simple diagram that an enormous quan-

tity of energy is stored in a cubic foot of water at high pressure. If the base of the cylinder in Fig. 502 be supposed to have one square foot of area, and at its bottom a cubic foot of water is enclosed below the piston, so that upon the application of heat to that water the piston would have a tendency to rise under one atmosphere of pressure on it, the water would form steam to fill 1700 cubic feet. If, however, the pressure be increased upon the piston, the specific volume of steam at such higher pressure diminishes while the amount of heat necessary to make the water into steam increases. The cubic foot of water at seven atmospheres or 103 pounds, instead of occupying 1700 cubic feet, would occupy but 274, because the piston would be held down by a pressure of 14,832 pounds. If it be conceived that similar water in the bottom of that cylinder was not quite hot enough to make steam at that pressure, but was hot enough to make steam at a somewhat lower one, it will be apparent that the water when the pressure was released would be able to lift such weighted piston through a good many feet. A simple calculation shows that if this energy be represented in foot-pounds, it is able to carry the weight represented by a boiler-shell, or a part of it, through a good many hundred feet, and to produce the effects which have been observed to attach to the most disastrous explosion.

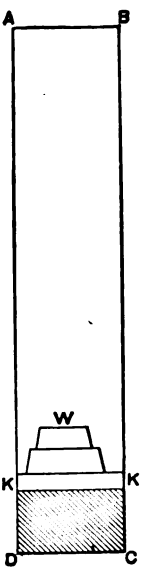

FIG. 502.

356. Reaction in Boiler-explosions.—It happens not infrequently that when the rupture of the shell from excess of pressure or weakness has permitted a partial escape of pressure, the water in the shell seems to be lifted by the sudden release of pressure on that side of the boiler, and the unbalanced pressure produces a reaction; or the water itself falls back against the part opposite the rupture, producing a strain which the already weakened shell cannot withstand, and thereby makes so large an opening for the release of pressure that the

formation of steam-gas is almost instantaneous, and the boiler is driven out of its setting as a rocket is driven by the reaction of gas behind it. As a rule the light portions of a boiler after rupture are found in the direction of the initial rent, while the more massive pieces are driven by the reaction of unbalanced pressure in the opposite direction. This reaction-phenomenon resembles concussive ebullition in that a strain almost like a solid blow is brought by it against that part of the boiler which remains in place.

357. Procedure when a Boiler is in Danger of Rupture. —It would be manifestly unwise to release the pressure suddenly from a boiler which was already under a great strain and in danger of rupture. To do so would be to invite the reaction caused by the lifting of the water, and the possible superposition of strains from this cause. The opening of a large throttle-valve or of the safety-valve may act in the same way, and it is doubtless this combination of strains which explains the frequent failure of boilers when the day's work is just beginning, and steam is turned from a boiler into a cold pipe, where it condenses and makes a reduced pressure, so that the steam rushes from the boiler at higher velocity than usual. A large valve should be opened with exceeding caution, slowness, and care under these conditions.

The proper procedure is to withdraw the fire and permit the boiler to cool off gradually, and so permit the dissipation of pressure by these means. The fire can be checked by dumping it or by throwing ashes or dirt upon it. If great confidence is felt in the ability and strength of the boiler, the blow-off valve can be cautiously opened for the relief of pressure slowly through that opening. The heat stored in the water is thus disposed of, and after the boiler is empty of water it is comparatively safe. The escape of pressure through the blow-off valve is also unlikely to cause difficulties from reaction.

CHAPTER XXIX.

MANAGEMENT AND RUNNING OF ENGINES.

358. General.—So many and so widely different are the types of engine and the work which they are to do that anything like detailed instructions is impossible. The best that can be done is to lay down certain general principles applicable either widely or universally, and leave the application of them in detail to the judgment and skill of the operator in each case.

The most general case would be of an engine for a power house or similar plant, and the first distinction which will make a difference in procedure must be based on whether the engine is non-condensing or condensing.

359. To Start a Non-condensing Engine.—The engine having been properly erected and all connections supplied (Chapter XVIII), the fly-wheel should be turned in such a position that the valves uncover the ports, and that there is a turning leverage for the pressure of steam to turn the crank. This is usually secured by having the crank in the first quadrant of its revolution. If the valve-gear is detachable so as to be operated by hand, this is of less consequence; but if the engine has a positively connected valve-gear, and particularly a cut-off mechanism, it may happen that the steam-valve has come back to close the admission of steam, while there is still a turning leverage so far as the mechanism is concerned. Most large engines have notches in their massive fly-wheel whereby they can be turned by an ordinary bar, or any mechanical purchase may be brought to bear to put the crank in the required position. The drip-connections for getting rid of condensed water being opened, steam is carefully

admitted through the throttle-valve by a very slight opening whereby it will be allowed to blow through and heat the piston and the walls of the cylinder to a temperature sufficient to prevent excessive condensation. This also rids the steam-pipe of the water which has accumulated within it. In positively connected valve-gears this will heat but one end of the cylinder, but where the valves can be operated by hand the steam can be admitted for warming to both ends, and the whole mass of metal brought up to the necessary temperature. It is desirable, however, to leave the drip-connections from the cylinder open until after the engine has started. The cylinder being fully warmed up, which will be recognized by touch and by the high temperature of the drip-pipes, a little more steam can be admitted either through the wider opening of the throttle-valve, or through the more ample movement of the distributing-valves, so that sufficient pressure comes on the piston to start the engine. It becomes a matter of importance to store sufficient energy in the fly-wheel to carry it past its first dead-centre, on which otherwise it would be likely to catch, and particularly if there is water in the cylinder whereby its motion can be arrested just at the time of getting ready to pass the centre. If this difficulty is not met, the engine will then take up its regular motion, slowly at first, until all danger from water shall be passed, and then gradually more steam is admitted until its regular rate is reached, at which its governor will take hold and control the supply of steam. The danger from the water of condensation is usually passed at the end of two or three complete strokes, but it may last longer, and it may occur from priming even under regular service. The drip-valves are therefore closed cautiously, to be sure that all water has been blown out. It will make its presence manifest by a characteristic snapping or cracking like the blows of a metallic substance within the cylinder, which once heard will always be recognized. The danger from water has already been alluded to. If the engine is one requiring its cut-off to be regulated by hand, and not by the governor as in link-motion engines, adjustable cut-off engines,

etc., the throttle-valve will usually be opened wide and the regulation effected by the use of such adjusting mechanism when the normal speed of the engine is attained.

360. To Start a Condensing Engine.—Here again the variety of methods used to effect condensation makes it difficult to include all conditions (Chapter IV). If the engine is surface condensing, the circulating water will be started in motion before the main engine is started. If it is a jet-condensing engine driven by independent air-pump connections, the vacuum in the condenser will be created before the main engine is started by starting the independent air-pump. With the attached system or the gravity or siphon systems the vacuum must be created after the first steam is delivered to the condenser. With the attached system and large air-pump it is desirable to start the engine with the crank in such position that the first motion of the piston shall cause the working stroke of the pump to take place and create a partial vacuum in the condenser. Sometimes the vacuum is created in advance of starting the attached mechanism by permitting the condenser to fill with water, and attaching an independent pump to the condenser which shall draw out the water until its capacity for equalizing pressures in its own cylinder and the condenser are reached. In many cases the cool metal of the condenser will serve to effect the first condensation and create a sufficient initial vacuum for the engine to get its air-pump to work without difficulty. The drip-connections of a condensing engine are different from those of a non-condensing engine, because as soon as the engine has started the flow would be into the cylinder through them. For this reason they are either left off or are connected into the condenser piping. After the engine has turned its centres the handling of its condensing appliance will involve the control of the injection-water in jet or direct-contact condensers, and the speed of the circulating-pumps in the surface type. Since it may happen, in condensing arrangements where the air-pump and circulating-pump are driven from the same rod, that the full capacity of the circulating-pump is not required, while the

air-pump must work full stroke, a by-pass valve is usually made on the circulating connections, so that it shall be able to pass its own water round and round in part, and not be compelled to handle an unnecessary weight to effect condensation. The injection of jet condensers enters them by atmospheric pressure, so that the valve which controls need not usually be wide open. The operation of the condenser is regulated by the reading of the vacuum-gauge, which is graduated either from zero to 15 pounds of vacuum, or from zero to 30 inches of mercury. The vacuum is satisfactory if it reads over 13 pounds or 27 inches. It will be less than this either if water is in excess, or if there is too little water to dispose of all the heat which the steam brings into the condenser.

361. To Start a Compound Engine.—The compound engine, having both a non-condensing and a condensing cylinder, requires to be handled in starting according to the principles laid down in both the previous paragraphs. It is usual, however, to derive in the compound engine an advantage in starting which is not present in the single engine. If the two cranks are at an angle with each other, which is usual in power-house practice, it becomes possible to start the engine, even if the first or high-pressure-cylinder stands, with its crank on the dead-centre. A valve connecting the receiver of the low-pressure cylinder with the steam-pipe will be controlled by a valve which will be called the by-pass valve. By opening it, boiler-steam is admitted directly to the low-pressure cylinder, which will be at its best mechanical advantage if the high-pressure crank is at its dead-centre, and by these means the engine can always be started either as a low-pressure or as a high-pressure according to the position of the cranks. The complication of the steam-heated receiver and steam-jackets adds nothing of difficulty to an engine of this sort. The jackets make it unnecessary to pay special attention to the heating of the cylinder, since to open steam on the jackets will accomplish this purpose. Some recent practice has attached the steam-pipe of the independent air-pump to the

jackets and receiver-circuits, so that the steam must be turned on to the jackets for warming the main cylinder before the engine is started. This is desirable to guard against the possibility of difficulty caused by unequal expansion of parts which are hot and cold.

The compound locomotive with intercepting-valve operating automatically starts just like the simple engine non-condensing.

In large vertical engines such as are used in marine practice, where the engine is on different levels, it is often necessary to have several hands for proper starting. Usually one level is the working platform in such cases. The common practice on board ship is that the chief in starting is at the throttle-valve, the first assistant in charge of the valve-gear, and while the second is in charge of the fire-room, the third or junior will take the bell or signalling apparatus from the bridge.

362. Lubrication of the Engine.—The bearing-surfaces of all parts of the engine require to be separated from actual metallic contact by a thin film of some lubricating material. This is true both of the moving parts within the valve-chest and cylinder and of the external bearings of the mechanism. The old practice for lubricating within the steam parts of the engine was to introduce tallow, whose body prevented it from being dissipated too rapidly under the conditions of heat and pressure. The difficulties referred to under paragraph 342 have made it much more common to use the mineral oils for this purpose. The requirements of a satisfactory lubricant are that it should have a low coefficient of friction, which means that it should not be too viscid or have too high a resistance to motion of its particles. It should not be so fluid or limpid as to be squeezed out by the contact-pressure of the two surfaces, and it should be without deleterious effect on the surfaces which it lubricates.

363. Lubrication of Cylinder and Valves.—The lubricant required within the valve-chest and cylinder must be introduced against the pressure prevailing therein. This can be done in one of several ways.

(1) In condensing engines a simple open cup, closed at the bottom with a valve or cock, can be screwed into the clearance of the cylinder, and opened when the pressure in the

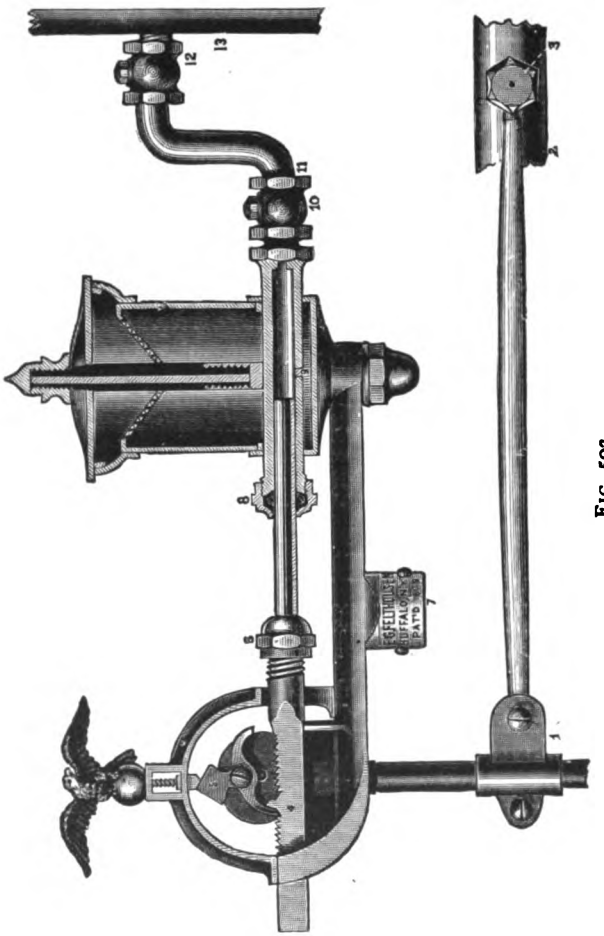

FIG. 503.

cylinder is less than atmospheric. This is particularly applicable to vertical cylinders, but will not lubricate the valve.

(2) The oil can be forced into a cylinder by a pump either operated by hand or driven by the engine, or in large engines by a small steam-cylinder. If driven continuously by the engine or by an independent oil-pump, the feeding of oil is

continuous and economical (Fig. 503). If driven by hand, the supply is intermittent.

(3) The modern method of lubrication which prevails most widely is the delivery of oil by drops continuously into the steam-pipe, using a column of water as a source of power. The oil is contained in a closed cup from which two connections enter the steam-pipe (Fig. 504). Upon the short one,

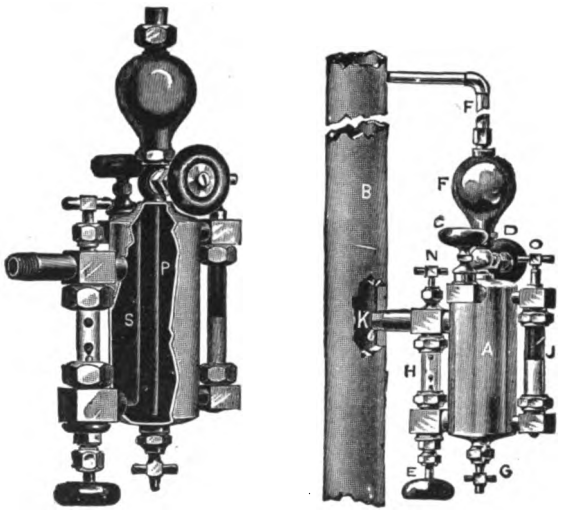

FIG. 504.

K, close to the cup steam-pressure in the pipe is acting, while upon the other, *F*, connected to the steam-pipe at some distance above the cup, both the same steam-pressure and the weight of a column of water condensed in that longer connection are acting. This column of water displaces the oil at a controlled rate into the surfaces to be lubricated. Its action is continuous.

(4) What is called the oil-cup or cylinder-cup is a brass vessel with a pipe-connection from its bottom, in which is a valve. The cup has a lid at the top which is screwed on and steam-tight. When the valve in the bottom is closed the oil-cup is cut off from the cylinder and the lid can be lifted off and the cup filled. When the lid is in place the lower valve

can be opened, and the pressure, equalizing, will permit the lubricating material to descend into the cylinder either slowly or fast according as the valve-opening may permit. This is the air-lock principle, but the feeding by it is intermittent.

364. Graphite as a Lubricant.—The objection to oiling cylinders with fluid oils in condensing engines is the difficulty from the oil in the exhaust and in the boiler (par. 197). Graphite possesses a lubricating quality, has a low coefficient of friction, a body which prevents it from being forced out of the surfaces where it should act, and furthermore seems to fill the pores of the surfaces so that they acquire a singularly smooth and mirror-like surface where it has been used. It is introduced either as a powder or in combination with some other lubricating material as a vehicle.

365. Lubrication of Bearings.—The bearings in a steam-engine which require to be lubricated are those of the shaft eccentric-straps, the crank-pin, and the cross-head pin and guides. The main-shaft bearings are the only ones which are stationary so as to be reached by the ordinary hand methods, and the convenient and automatic lubrication of all bearings has brought the application of many devices to maintain a continuous and abundant supply of oil. What are called sight-feed oil-cups are those in which a supply of oil is held in the cup and is allowed to drip from its bottom through a valve which controls the opening in such a way that the size and number of drops can be seen and regulated (Fig. 505). The oil from such cups falls through pipes which conduct it to the fixed bearings, where they are distributed by proper grooves cut in the bearing by which the motion of the shaft makes the oil spread where required. The connecting-rod bearings are the most difficult to provide for, because it is a secondary piece supported upon two other moving pieces. The crank-pin is lubricated either by centrifugal force as shown in Fig. 506, whereby oil received near the centre of motion is carried outward through a pipe to the centre of the pin, and is there distributed through a radial hole outwards upon the bearing-surface, or else a flat piece of metal is brought against a

webbing by the oscillation of the connecting-rod, and wipes the excess of oil off the webbing so that it is delivered down-

FIG. 505.

wards upon the pin (Fig. 507). For the cross-head pin a similar fixed cup is placed over the path of the cross-head having on its under side a piece of webbing or similar textile material upon which the oil drops and is spread. Illustrations

of these methods of lubricating will be seen in the various types of engines hitherto presented.

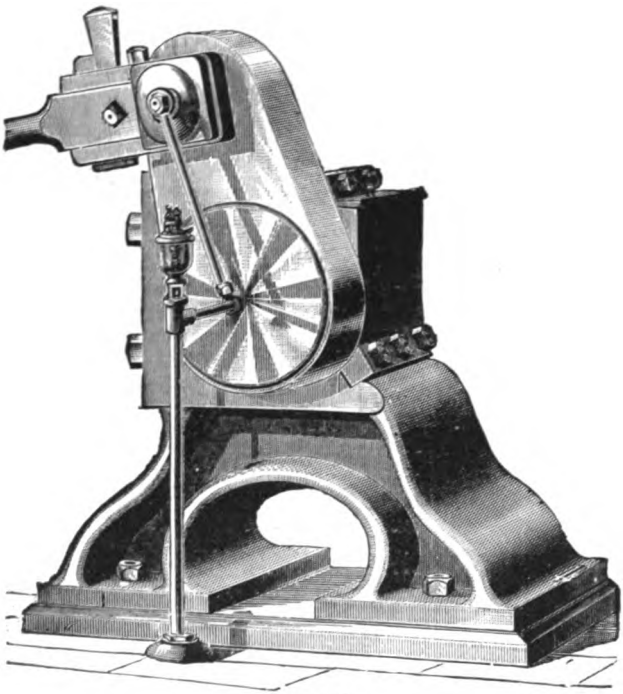

FIG. 506.

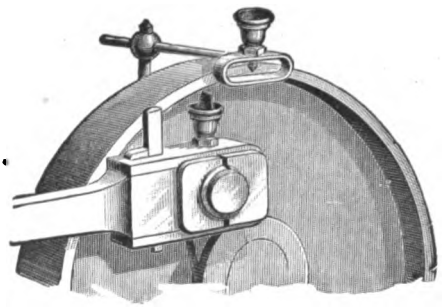

FIG. 507.

In large engines with many cylinders and multiple mechanisms a practice has been followed of bringing all oil-cups to a

few points and connecting these oil-cups by pipes to the various bearing-surfaces to be lubricated. In vertical engines of the marine type it is usual to lubricate the crank-pin by means of a pipe running along the connecting-rod, and ending near the cross-head pin in a flaring mouth into which the sight-feed oil-cup shall deliver its oil and from which the pipe shall carry it to the pin. It will be apparent that, as the cross-head travels in a straight line, the mouthpiece will always be under the end of the oil-cup in all positions. Bearings have also been made self-lubricating by means of rings which turn in a bath of oil below the bearing, and rest upon the shaft to which they are internally tangent. As these rings revolve with the shaft, the oil which adheres to them is

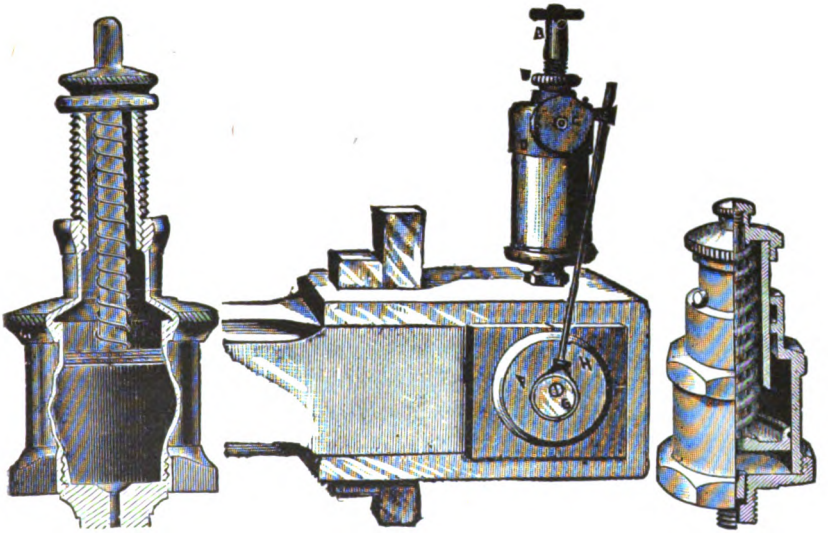

FIG. 508.

continuously brought up from the reservoir and delivered at the top of the shaft from which it is distributed.

Siphons of lamp-wick have also been used as a means of securing a continuous slow feed from an oil-cup. The oil rises by capillary action in the wick, and when it has reached the bend in the tube within the cup in which the wick is

placed it descends by gravity down the longer arm and is delivered in drops in the bearing below. (See Fig. 262).

Greases are another form of lubricant whose delivery from a reservoir can be secured by the slight rise of temperature from friction causing the vessel containing the grease to become warm and some of the grease to melt and run down through holes in its bottom. As the temperature falls the grease ceases to flow. Grease-cups have also been used in which a more resistant viscid grease is forced through the delivery-opening by the pressure of a spring controlled by a screw and nut (Fig. 508). This is particularly convenient for lubrication of locomotive-rods, where it is desirable that the oil-cup should be closed from grit and dirt, and where the methods of the stationary plant cannot be applied.

366. Tests of Lubricants.—The subject of the various lubricants is too broad a one to receive full treatment under present conditions, but brief reference may be made to three important tests. An oil is liable to fail of its purpose when for any reason it is prone to oxidize from heat or use and to become gummy as the result of that chemical change. Gumminess is a relative quality, and consequently the test to determine this is a relative test between the most limpid and the most readily oxidizable of the oils. The test for the gumming quality of the oil is to drop a certain weight or volume of the oil to be tested in the middle groove of three made upon a surface of cast iron which is inclined to the horizon at a slight angle.* In one of the other grooves is dropped an equal weight or volume of sperm-oil, which has no tendency to gum, and in the third an equal weight or volume of linseed-oil, whose gumming qualities are so great that it is used as a drying oil. The three oils slowly run down the grooves, undergoing oxidation and becoming more and more sluggish as they flow. The distance covered by the oil to be

* One foot elevation in six of length if the oil is to be tested in ordinary air. If the slab is heated, the slope may be steeper, and the test will require less time.

tested, as compared with the distance covered by an oil having the greatest and least quality of gumming as represented in the other two, measures its excellence in this respect.

The test for acid in an oil is made by putting a small quantity of the oil in a test-tube with a little copper scale of the suboxide of copper, Cu_2O. If there are fatty acids present, after some hours' exposure and with gentle heat the reactions with the copper turn the solution green. If the oil has a vegetable acid, it will turn blue. Further qualities of oils for lubricating purposes are determined by their low fire-point. If they give off an inflammable vapor by heat, they are of course a dangerous element.

367. **Accidents in the Engine-room.**—It would be impossible to discuss all possible accidents to all kinds of engines in the limited space permitted here. The most usual thing which goes wrong is the overheating of a bearing, either from too tight fitting of the bearings (Chapter XVI), or by defective alignment (Chapter XIV), or from the use of poor oil or too little of it. The hot bearing is first annoying from the excess of friction which it indicates, but after a short period of heating the parts expand, increasing the friction or hold which they form upon each other, whereupon the contact-surfaces begin to cut each other and the presence of the abraded material caused by such cutting occasions greater heating and finally destroys the contact-surfaces so that until refitted they will never run cool. For a revolving bearing which heats only moderately a wick or mat of some fibrous material which dips into a bucket of water can be used upon the heating shaft. Most marine engines (where alignment is troublesome by reason of the flexibility of the hull which carries the bearings) are fitted with special arrangements for carrying a current of water to be discharged upon the bearings and keep them cool. When cutting has begun it can sometimes be arrested by using a lubricant of heavier body, or by compounding a lubricant by mixing tallow and graphite. If the bearing is very large and the cutting very serious, a

mixture of tallow with lead-filings and powdered sulphur makes a compound which fills up the abraded surface in part, and often has prevented the cutting from going further until the bearings can be permanently refitted. Mercury may take the place of the lead.

In an engine otherwise well designed heating may be due also to the concentration of the load upon too small an area. This is incurable as a fault in design, but the heating which has been referred to above is the type which is preventable.

An engine may give trouble by a knock or pound at some part of its stroke. Probable causes for this knock or pound are:

(1) The main shaft out of line, so that the crank-pin is not perpendicular to the cylinder-axis.

(2) Lost motion in the pin-joints.

(3) Lost motion of the piston-follower, or of the entire piston on its rod by reason of the slacking of the nuts or keys.

(4) The valve loose on its rod or within its yoke.

(5) A shoulder in the cylinder, worn in the bore, which some change in the length of the mechanism causes the piston to strike.

(6) A side motion of the piston forced against the side of the bore when the steam comes on a piston which overlaps the port.

(7) An up-and-down motion of the piston toward the middle of its stroke by a deflection of the guides under the oblique pressure from the connecting-rod.

(8) A loose guide, or the cross-head does not have full contact against the guide at all points.

(9) Defective proportion of the steam-pressure to the weight of the reciprocating parts, so that the effort of the steam does not reach the crank-pin until after the latter have been accelerated. Delayed admission of steam produces the same effect.

(10) Improper compression, so that the lost motion neces-

sary in the bearings for lubrication takes up upon the crank-pin instead of upon a steam-cushion in the cylinder. Excessive compression may lift the valve, whereby a knock occurs when the valve returns to its seat.

The renewing of packing in stuffing-boxes of rods and stems is scarcely to be considered under the head of an accident, but belongs rather to the general maintenance of an engine in its proper working condition (Chapter XV).

CHAPTER XXX.

TESTING OF THE POWER PLANT FOR EFFICIENCY.

368. General.—The testing of the power plant belongs to a department which has been called experimental engineering and whose practitioners have been called steam experts. It forms a field too large to receive more than general allusion in a treatise such as this. The object in any power plant will be to ascertain whether the energy supplied in the form of fuel and liberated as heat in the furnace is being utilized as well as it might be, and with as great economy as possible; and further, to find, if such is not the case, at what points improvement and elevation of standard are to be sought. In a plant consisting of engine and boiler or a number of both it is obvious that there is an efficiency of the plant as a whole, and there is an efficiency of the boiler and efficiency of the engine separately. Such questions also come to the manager in control of a power plant when new appliances which are called improvements are presented for adoption. It is undoubtedly a stimulus to the operators of a power plant to know that at certain convenient intervals the efficiency of the plant is to be observed by the conduct of proper tests.

369. The Boiler-test.—The boiler-test is usually conducted to find out how much water is evaporated in the boilers for each pound of coal burned in the furnace. This involves weighing the water supplied to the boiler through the feed-pump in a given time, and the coal charged during that same time. The ash and incombustible matter withdrawn from the ash-pits are to be subtracted from the coal burned as a means of finding out the percentage of ash and crediting the boiler with the actual combustible supplied to it, and the

steam passing off through the steam-pipe should be sampled at frequent intervals during the test to see whether it is delivering evaporated water in the form of steam, or is entraining water through the pipe of the engine without forming steam. It is obvious that to refrain from this check upon the quality of steam is to credit the boiler with evaporating more water and disposing of more heat than it actually did, and therefore to increase in the result the amount of water really and effectively handled by the boiler in a given time. The weight of coal charged into the furnace is determined by scales of any reliable structure which will read to a quarter of a pound, and the weight of water by having two tanks similarly mounted on scales into which the suction-pipe of the pump can be placed alternately, and the weight of water fed determined by the difference between the initial and final readings as each tank is alternately filled and emptied. It is usual to have an observer specially detailed for the coal and the water scales, with blanks upon which he makes the entries as observed and which form the log of the test. Meters may be used to check the weighings.

370. **Flue-gases.**—It is desirable in a boiler-test to know whether the products of combustion escaping from the setting are carrying an unnecessary amount of heat to waste, and whether the furnace-gases are of proper constitution with respect to waste of fuel in them or excess of oxygen reducing the temperature in the furnace. The temperature of the flue-gases can be observed by a standard pyrometer, if such are at hand; or a very close result can be obtained by the method with a ball or mass of iron inserted in the flue until it acquires the temperature of the gases, and then cooled in a known weight of water whose rise of temperature in cooling the mass of iron is observed (see Notes). The volume of the flue-gases or the weight of the products of combustion can be ascertained from the readings of a gauge introduced so as to determine the difference of pressure within the flue and outside of it. The composition of the chimney-gases is determined by gas-analysis methods, the best known apparatus being

that of D'Orsat. Such appliances are specially directed to determine the amount of carbonic oxide, carbonic acid, and oxygen.

Coal-calorimeters for observing the calorific power of the fuel have already been referred to in paragraph 287.

371. The Calorimeter.—There are several forms of calorimeter which are used to determine the quality of the steam or the percentage of moisture which it contains, in order to correct the record of the scales which weigh the feed-water. These instruments withdraw from the main steam-pipe a sample of the steam which is passing through it, by means of a nipple which crosses the pipe and suitable perforations in it withdraw the material which is passing through the pipe at all its sections. The material drawn out through such a nipple is then analyzed by the calorimeter proper of which there are many forms.

The most accepted of current practice is a combined separating and throttling calorimeter, in which the water in the sample taken from the pipe is first separated, and then the steam analyzed by passing it through a throttle orifice whereby it becomes superheated. The heat necessary for evaporating the water which it contains is measured by the difference in reading of thermometers inserted into the instrument. Other types of calorimeters are the coil-calorimeter, in which the determination of the percentage of moisture is based upon the amount of heat necessary to condense the mixture which passes through a coil, and the barrel-calorimeter, in which a sample of the mixture from the nipple is taken into a barrel of water through a flexible hose for similar condensation. The determinations are made by observing the difference in the heat-units required to condense the mixture as compared with what would be required if it was altogether steam.

372. Report of a Boiler-test.—The importance of a reasonably close agreement in methods for the conduct of a boiler-test have induced engineers to attempt to agree upon such standard methods, and a uniform method of tabulating and reporting them, together with the calculations which are

involved in making the deductions from a boiler-test. The headings of such a standard form of report will be found in the Appendix.

373. The Engine-test.—It has already been made apparent (pars. 6 and 7) that for many engines the resistance appears in a form in which it can be directly measured so as to determine the net or effective work received from the engine. Such cases would be where the work of the engine is pumping or hoisting, or the generation of electric energy. In many cases, however, where the resistance of the engine consists in driving the transmissive machinery of large establishments, the net resistance is not directly measurable, and the only method of determining the power and work of the engine is by means of measurements made upon the effort in the cylinder. Moreover, under many circumstances the insertion of the measuring apparatus between the motor engine and the net resistance would be inconvenient or impossible. This limitation of direct measurement is often imposed by the magnitude of the units involved, if for no other reason. If the power is small enough to be conveniently determined by direct measurement, the apparatus used for this purpose will be called a dynamometer. If the work is to be measured in the engine-cylinder, the instrument used will be called an indicator.

374. The Dynamometer.—The function of the dynamometer is to measure the effort passing through it by giving the pounds which constitute that effort multiplied by the space in feet through which it moves. The dynamometers often are adapted to make only the observation of the effort in pounds, leaving the space passed over to be otherwise observed. They are of two great classes. If the effort is absorbed in the dynamometer and does not pass beyond it, it will be called an absorption dynamometer. If the effort passes through the apparatus to a resistance beyond it, to which it is transmitted so as to undergo measurement, but no absorption beyond the friction or tare of the instrument, it will be called a transmitting dynamometer. They may each be

further subdivided according to the methods of transmission and of absorption. The absorption dynamometer usually absorbs by friction the work transmitted to it applying the principle of a brake, which exerts a tendency to hold its brake-wheel from moving, and the effort to resist its motion expressed in pounds and multiplied by the feet through which that resistance passes gives the foot-pounds or horse-power. The heat of friction must be disposed of by cooling appliances, and in many forms the variation in the coefficient of friction between the brake-wheel and its shoes makes the use of this means a somewhat delicate operation. In the transmitting dynamometer involving rotary motion the usual plan is to drive the resistance through a spring which is attached to the end of a convenient lever on the driving and driven parts of the apparatus. The separation of the driving lever from the driven lever indicates the tension or compression upon the measuring spring, and thus the power in pounds is observed by noting the condition of the spring and the speed at which the effort is moving. Such dynamometers are usually restricted to comparatively small powers. Other types determine the power transmitted by belting, by measuring the tensions upon the two bights of the belt, or by weighing the effort required to equate the pressure upon bearings, and for small sizes floating dynamometers have been successfully used in which the effort necessary to keep a tank or vessel upon an even keel when floating upon a surface of water measures the tendency to turn it, and therefore determines the power which is passing through the apparatus borne upon such tank or vessel.

These methods are of comparatively narrow application to power plants of large size, and for their detailed application reference should be had to special treatises upon this subject.

375. **The Indicator.**—For the observation of an effort exerted upon the piston of an engine, a device for measuring or observing the intensity of the pressure upon such piston at every point of its stroke becomes necessary. Such an apparatus was worked out by James Watt, and was by him called

an indicator. The diagram of effort which has been used throughout this work (Chapters III and VI) is really the diagram which is given experimentally by such indicator. It consists of a piston of known area moving with the least possible friction in a little cylinder, whose under side is in communication through as short pipe-connections as possible with the end of the cylinder. It is usual to make this connection into the clearance, but at such point that the flow of steam through the ports shall not affect the pressure actually prevailing where the indicator is connected. This pressure connected on the under side of the indicator-piston would force it upwards in its cylinder, and this tendency is resisted by a spring carefully calibrated with respect to the area of the piston, so that it shall undergo certain definite deformation under certain definite pressure. It will be apparent then that the deformation of this spring will weigh the pressure, and if a tracing-point or pencil be attached to the piston, it will draw a curve which will be the ends of ordinates corresponding to the pressure on the indicating piston in terms of the scale of the spring. If a motion of a paper at right angles to the piston motion be provided, a closed curve will be made, which will thus record the pressures in the cylinder at every point of the stroke, if the movement of the paper be produced by a linkage or mechanism driven from the piston by a positive reducing connection. It is usual to reel the paper of the diagram upon a barrel which is rotated through a part of a revolution by a reducing mechanism driven from the engine cross-head.

It will be apparent that with a known scale of spring in the indicator the mean height of the diagram which it traces will be the mean pressure upon the piston. The mean height can either be ascertained by finding the area of a diagram with a planimeter and dividing that area by the length of the diagram, or the mean height of the diagram can be observed by dividing the length of the diagram into equal parts, and measuring the height in each segment, adding their aggregate together and dividing by the number of heights measured.

It will be further apparent that the lines of the diagram will indicate the satisfactory working of the distributing-valves, or the reverse, by reason of the relation of actual pressures to those which ought to prevail, and furthermore the approximation of the curves of effort to those which theory indicates as desirable. The indicator is thus a check on the setting of the valves, sizes of ports, friction through pipes, resistance to free release of exhaust, excessive condensation, ill-adjusted expansion, and the like.

The errors of the indicator are those due to defective accuracy of springs, inertia in the moving parts, which causes them to move further than simply to balance the pressure, friction which prevents their moving as far as they ought to balance the pressure, and inaccuracy in the reproduction on the diagram of the motion of the piston in its true relation by reason of defects in the mechanism used to give motion to the paper.

376. Deductions from the Indicator-card.—The primary deduction from an indicator-card is the mean effective pressure (usually called M.E.P.) as measured directly from the card. The diagram can, however, furthermore be used for a more important purpose, which is to determine the volume of steam for each stroke, and hence to infer the weight of water used in the development of a horse-power. The volume and pressure prevailing in the cylinder at the completion of its stroke, or when exhaust takes place, enables the volume and weight of steam, and therefore of water, to be calculated when it is assumed or known that the steam at the release into the exhaust-pipe was dry and saturated, which it is likely to be.

This is not the full quantity of steam which works through the engine, because the indicator does not take account necessarily of all water resulting from condensation. It is more accurate to use the volume at release than at the cut-off point, which might otherwise be equally well used, by reason of the fact that at cut-off less water has been evaporated than will be given at the reduced pressure which prevails at the

end in an expanding engine. An indication of the presence of evaporated water will be given by the diagram when the curve indicating the relation of pressures during expansion passes unduly outside of the theoretical curve of such expansion. This indicates that water has been evaporated which has raised the pressure in the cylinder, but has done it at the expense of the heat of its walls.

The difference between the indicated horse-power and the net or effective horse-power of the engine will be caused by its own friction as a machine involving the resistance offered in the cylinder, at the valves, at the stuffing-boxes, at the pins, guides, and bearings. This quantity is apt to be a nearly constant resistance even under quite wide variations of load, and can be observed, if circumstances permit, by taking an indicator-card when the only resistance upon the engine at the given or desired speed is its own friction. The foot-pounds given by that observation is the friction of the engine, and is to be subtracted from the indicated horse-power to give the net or effective horse-power.

CHAPTER XXXI.

GENERAL REMARKS UPON THE POWER PLANT.

377. Concentrated or Subdivided Steam-power.—There are two policies possible in the design of a power plant where the resistance to be overcome is extended over a large number of units, tools, machines, or whatever. The power may be liberated from the fuel in a central location and transformed into motor energy in a large engine near the boiler plant, and from this large engine, power may be transmitted by shafting and belting all over the plant for use as required. The other plan is to carry the power in the form of steam to a large number of small steam-engines located at convenient points and each of which drives its own section or group of machines.

There is no question as to the wisdom of concentrating the generating or power-furnace plant, whichever of the other two systems be considered advisable. The reason for this is that the handling of fuel and of ashes and superintendence of the boiler plant is made economical in proportion as the number of these units is large when they are concentrated under one superintendence and in one place. The fire-risk and insurance problem is also diminished by the scheme of concentration. It becomes of advantage to use mechanical methods for handling fuel where large numbers of horse-power are concentrated and where one mechanical plant can serve for them all. The cost of stack or artificial-blast appliance is less per unit when they are together.

Much the same arguments are to be urged for the principle of driving the plant from one central engine. The con-

centration of supplies, repairs, and superintendence, which will vary with the number of engines and not with their size, all point to the advantage of this system, as in the case of the boiler plant. There is the further advantage that the large engine will be more economical in proportion than the individual small ones, furnishing in the aggregate the same amount of horse-power. This is one of the arguments for the central-station method of furnishing power for street-railway propulsion rather than by individual motors. With the central engine the loss in transmitting its power by shafting, belting, or similar means to the individual and subdivided machines is a loss in friction; and furthermore, with some exceptions it will be necessary to drive the whole plant of transmissive machinery in order to run a small section of it for work overtime or where it must not be intermitted, as in the boring of cylinders and such work. Moreover, the failure of the central engine or any part of the transmission machinery makes it necessary to stop the entire establishment. With subdivided power only the part affected need be isolated for repair, while the rest runs on without interruption.

With the system of subdivided power among small engines the transmission loss is from condensation of steam in the pipes which connect the boiler plant to the various engines, which is probably, with an efficient system of non-conducting coverings (Chapter XVIII), less than the loss by friction expressed in percentage of the whole power furnished to the piping system. This plan furthermore has the advantage that only the section of the plant which is desired need be run for overtime or special work, and the system is further flexible if it is desired to run one engine with its attached machinery at higher speed or slower than the normal. The aggregate first cost of the number of engines, if of the same character as to workmanship as the single large engine, when the cost of foundations and pipe and of drip and exhaust connections is added, is likely to exceed the first cost of the large engine. On the other hand, the whole power for the plant does not have to pass through the first set of trans-

missive shafting, but the principle of subdivision enables each section of shafting and its corresponding pulleys to be lighter in proportion, diminishing the friction which is caused by weight, and failure of one engine or main belt does not arrest the whole plant.

378. Distribution of Power by Electricity, Gas, or Air.—In addition to the methods of transmitting power by steam or shafting discussed above, the methods of distributing by other transmission systems should be considered. The first plan is that of using an electric generator in connection with the central engine from which the power will be distributed by wires carrying the current to the sections driven each by its own independent motor, or to separate machines each with its own motor. The cleanliness, convenience, compactness, and easy control of the electric transmission makes it very attractive, and the loss in the conversion of the steam energy into electric energy and its transmission and reconversion into motion are apt to be about the same as the losses in friction in high-grade plants, and will be less than such losses where settling or careless management has permitted the transmissive machinery to deteriorate in quality. If but one generator is used, there is the same difficulty as with the central engine in the previous paragraph, that a breakdown of that central engine stops the entire plant; but this can be met by either duplicate engines, or by the principle of subdivision in the power house, where the aggregate of several units makes up the entire source of energy, and they are not likely to fail all at once. The expense of multiplying motors must be considered in this system, although it must not be forgotten that with it the cost of shafting, hangers, and pulleys does not have to be incurred, and serves to offset the cost of motors.

Until the commercial problem of the storage of electrical energy shall have been successfully solved, electrical transmission systems offer the same objections which belong to the preceding plans, that there is no storage of energy when not wanted, to be given out when it is called for. This is a great advantage which is offered by the use of gas-engines

operated by gas made in a producer and stored in a holder. The gas-engine operates only when wanted, and when gas is shut off from it all expense connected with it stops except interest. Gas can be made at maximum efficiency for a short period, and then the expense connected with its generation stops until the supply is exhausted. The system possesses all the other advantages of subdivided power.

The distributing of power by compressed air for motors has not been widely extended by reason of the usual absence of any conditions which make the use of the exhaust-air convenient or desirable at the place where it is discharged. In mining practice and similar places this is an immense advantage for compressed-air machinery, which is furthermore clean and convenient. There is a loss in the double conversion at the air-compressor in the power house, and the reconversion at the air-engine, which is only to be offset by the use of extra heating appliances at the motor whose cost must be charged to the method of transmission. This in no way is to be considered as an argument against the convenience of compressed air for many machines of the portable or detached character.

379. Location of a Power Plant.—The choice of a location for a power plant is often fixed by considerations over which the engineer has no control. When such control is possible the considerations directing the choice of a location are mainly those of good sense and experience with respect to some of the following points:

(1) It must be accessible for the delivery of the fuel-supply and for the removal of ashes. In cities with a water-front so that coal can be carried directly into the storage-bins from boats a considerable saving in cost per ton is to be effected, and this points to the selection of such water-front when otherwise convenient and possible. In the absence of water-transportation, the railway and the possibility of use of sidings from it are important features. It has already been discussed (Chapter XXIV) that the delivery of coal into a boiler-room by gravity diminishes the cost of a plant, but the

fuel can as well be elevated within the power plant as without it. In cities where the transportation within the streets may be interrupted by the winter snows it is important that a sufficient storage capacity should be supplied in the plant to prevent possibilities of stoppage if there should be any interruption of regular transportation.

(2) The water supplied to a power plant is a vital question, and a disregard of it in advance has often increased the operating expenses considerably. In most cities the water for a power plant is metered from the city or water company's mains, so that a fixed charge per annum for water is an element which must be considered. If condensation is to be effected, a supply of water for this purpose is also required, and in a large plant it becomes a very considerable quantity. It is quite usual to obtain this water of condensation from wells sunk within the grounds of a power plant, and a nearness to large bodies of water in streams or rivers is of manifest advantage in this respect. It is often found that well-water either from deep artesian wells or the driven-well sources is apt to contain matter deleterious to boilers, rendering such water unfit for steam-making. References to methods for saving water used in condensation have been given in Chapter IV.

(3) Proximity to the water-front or the railway often favors the third element in selecting a location, which is to find a place where the smoke from the furnaces discharged through the chimneys shall not make the power plant a nuisance in the view of the neighborhood. The large chimney-stacks, if that method of draft is chosen, are useful rather than ornamental outside of the industrial district of cities; and if by the use of artificial draft or from the nature of the power plant (pars. 284 to 286) there is noise within it or an unpleasant vibration caused by the engine exhausts or other reciprocating motion, it may give rise to obstacles, legal and otherwise, to the satisfactory operation of the plant.

(4) The securing of draft from the chimney-stack, if natural draft is used, must be sought by locating the stacks in such a relation that surrounding conditions shall not pre-

vent their satisfactory working. High buildings either in the line of prevailing winds to windward or to leeward of a stack will make conditions unfavorable to it.

(5) The cost of the ground is also likely to be affected by the location chosen with regard to the previous conditions, but in their absence it cannot be disregarded. It is usually to be foreseen that the power plant will grow with the increased demands which are likely to be put upon it, and the obtaining of the necessary land for such growth is a matter to be considered to some extent in location.

380. Construction of a Power House.—The construction of a power house will be conditioned very largely by the price of land and the ground which it may be allowed to cover. If ground is not expensive, there are great advantages in making the power plant all on the ground-level, both engines and boilers. It is desirable not to put them in the same room with no separating partition, by reason of the heat and dust which the fires cause, and the moisture in the air which comes from leakage and evaporation. If the boilers and engines must be under one roof, a separating partition with as few door-openings as possible is necessary. It is desirable on account of fire-danger to keep the engines and boilers within separate fire-walls.

If ground is too costly to permit this arrangement, the boilers and engines must be arranged vertically in successive stories, and it becomes a question whether to put the great weight of the stationary boilers on the ground or in a basement, and the lighter weight, but moving masses, in the upper layers, or to reverse this arrangement. The older plan was to put the boilers and coal below, and the engines above. It is interesting to observe the reversal of this system in some modern power plants in the larger cities where ground must be economized. The revolving machinery is put in the basement on the ground, where its vibration can produce the least effect upon the walls and floors. The dead load of the boilers and their contents is borne upon the next tier of floors, and the coal-bins are put at the top of all with elevators or

hoists to fill them conveniently from the street-levels. This offers manifest advantages in economy of handling material, and the only objection to be urged is the slightly diminished effective height of chimney which is caused by elevating the boilers.

The construction of the power house will be conditioned somewhat by the foregoing principles. If it is a single-story building, the ordinary construction of brick walls with proper foundations and a light iron roof is the typical and approved design. It is, however, exceedingly convenient in the power plant to have it commanded by a travelling crane spanning from wall to wall, so that the rapid handling of machinery in case of repair or substitution or extension is possible with such facilities. In the two-story or many-storied power plant the construction becomes the more costly, by reason of the weight to be provided for per square foot of floor-space, and of the necessity for fire-proof construction and of the weights which come upon the walls. This opens a department of the subject with which the present limits of subject and space make it impossible to cope, and which belong to the department of the structural engineer. In such a building the provision for growth by addition of engine-units is to be foreseen and provided for, since the limitations imposed by the wall-construction are positive and fixed.

381. Arrangement of the Power Plant.—It is a conceded principle of power-house practice for public use that the machines must be in whole or in part in duplicate, so that the failure of any part shall not necessitate an entire stoppage of the supply of power to users. If, therefore, the duplication is only partial, the failure of some detail in those departments of which there is but one example may cripple the whole plant. It is usual to have spare boilers and spare engines in a large plant, but there are many in which there is but one steam-pipe, and in which a failure or accident to the pipe would be as fatal as to the motive machinery itself. Some of the best and newest power plants have everything duplicated so that there are practically two plants in one. It is an

advantage if the principle of subdivision in the plant itself is carried out to make the power units of different capacity, so that when the demand for power varies it may be made by running units of different size to their full capacity, which is their most economical working. This is better than to have large units but partly loaded and running at a disadvantage for most of the time.

Where the plant is to be driven from a single engine by belts and shafting, the engine should be at or near the centre of the length of the main line of shafting. This diminishes the weight of shafting and friction, because only half as much power has to be transmitted by the torsion of each half-length if the resistance is wisely distributed. This plan gives rise to a ground-plan which develops into a capital letter H, the power plant being in the cross-bar between the two buildings.

There are special details of construction belonging to power plants which drive electric generators, as to the use of iron nails in floors and walls, which belong specifically to that department.

382. Fire Protection of the Power Plant.—The structural methods to be observed in power plants with respect to danger from fire have been a special study by the insurance companies. The conditions in general are that whatever woodwork there is in the power house should be massive, and the least possible space left concealed where the fire might start and lurk undetected until it had acquired headway. The construction of fire-doors and shutters to prevent the passage of fire and flame through walls is also a matter of some importance.

383. Floors of the Boiler Plant.—The floors of a machine-shop or engine-room are very important features of the building. A concrete floor either of the ordinary construction or made of some of the proprietary materials is the suitable arrangement for the fire-room space where not exposed to cracking from heat of ashes and similar condition. It is usual to lay down a fire-brick pavement close to the boilers, and the hot ashes and clinkers should be kept upon it.

Ordinary brick or flagstone paving-stones will be found in many places where cement or artificial stone is costly or inconvenient. It is desirable that the floor should be one on which an abundance of water can be used for washing, and which should be arranged to drain itself into suitable catch-basins and drains by the grades used. A brick or concrete floor is not desirable for a room containing machinery, by reason of the continual grit which is worn from the floor by treading on it, and which currents of air carry into the revolving bearings.

For the engine-room a wooden floor in two thicknesses is quite usual. The standard basement floor of the fire-insurance companies is a two-inch plank tongued and grooved, and laid on asphaltic concrete, while above that the floor-boards proper, 1¼ inches thick, are blind-nailed. For upper floors the plank is 3-inch. The upper surface is the part subject to injury from weights upon it, and can be removed when worn without disturbing the main floor-surfaces. The floor of an engine-room should be of a structure which shall not be slippery by reason of oil which may get upon it. In electric-power stations wooden floors are of special significance, because a brick or cement flooring makes a sufficiently good electrical connection with the ground to make accidental contact with a dynamo dangerous to a man standing on such floor, while with wood he is adequately insulated.

The subject of construction of industrial buildings is too broad a one to be more than hinted at in such a connection as the foregoing, and the interested reader is referred to more extended discussions for exhaustive treatment.

APPENDIX.

HISTORICAL SUMMARY.

B.C.	120.	Hero of Alexandria describes a steam reaction-wheel in his *Spiritalia seu Pneumatica.*
A.D.	1601.	Giovanni Battista della Porta in his *Pneumatics* describes condensation of steam in a closed vessel as a means of lifting water.
	1615.	Solomon de Caus (*Les Raisons des forces Mouvantes*) describes raising water by steam-pressure above it in a closed vessel.
	1629.	Branca describes turning a wheel by jet of steam against vanes.
	1663.	Edward Somerset, second Marquis of Worcester, describes in his *Century of Inventions* a separate boiler whose pressure was admitted upon water in a closed vessel.
	1680.	Denis Papin invents the digester for boiling at high pressure.
	1680.	Huyghens proposes a true cylinder with piston traversing it.
	1681.	Denis Papin invents the lever safety-valve.
	1690.	Denis Papin applies the piston to receive motor-pressure, the cylinder being also the boiler.
	1697.	Thos. Savery pumps by forcing water up by pressure and lifts water into the chambers by the vacuum caused by condensing.
	1698.	Savery's first patent for a pumping-engine.
	1705.	Papin applies lifted water to turn a rotating wheel. Uses internal fire-box boiler.
	1705–07.	Thos. Newcomen and John Cawley, with Savery, combine separate boiler, cylinder and piston, and surface condensation. The Atmospheric Engine.
	1716–18.	Dr. Desaguliers improves Savery engine by using jet condensation.
	1713.	Automatic valve-gear attributed to Humphrey Potter.
	1718.	Plug-tree valve-gear for pumps designed by Henry Beighton.
	1725.	Leupold designs a high-pressure non-condensing engine.
	1730–58.	Smeaton improves Newcomen engines.

1763-64. James Watt repairs model of Newcomen engine at Glasgow University.

1766. William Blakey proposes a water-tube boiler.

1769. Watt's patent of separate condenser.

1781. Jonathan Hornblower invents double-cylinder or compound engine.

1782. Watt's patent of expansive working of steam and double-acting engine.

1784. Watt patents parallel motion, governor, and indicator.

1799. Murdock invents the three-ported slide-valve.

1800. Trevithick in England and Oliver Evans in America introduce high-pressure non-condensing engines.

1804. Arthur Woolf combines two-cylinder engine of Hornblower type with higher steam-pressure and Watt's condenser.

1804. John Stevens designs a sectional boiler.

1821. Julius Griffith designs a sectional water-tube boiler.

1838. S. Hall uses a surface condenser on S.S. Wilberforce.

1840-42. Stephenson link-motion introduced.

1840-45. Shepard & Co. of Buffalo introduce the plug-valve with loose spindle for steam-distribution.

1841. F. E. Sickles patents a drop or trip cut-off.

1841-44. Henry R. Worthington invents and introduces direct-acting pumps without fly-wheel and with valve thrown by stored energy in springs and by steam-pressure on auxiliary engine-piston: also later the duplex pump.

1849. Geo. H. Corliss introduces a trip-gear, combined with wrist-plate, and plug-valves.

1849. B-valve designed by Henry R. Worthington for pumps.

1854. Randolph & Elder introduce compound engine for vessels.

1855. Greene trip-valve gear introduced.

1856. Stephen Wilcox uses inclined water-tubes for a boiler.

1857. Charles T. Porter invents the central-weighted or Porter governor.

1859. Radial valve-gear proposed by Hackworth.

1859. Independent circulating-pump used for condenser of S.S. Moulton.

1859. John F. Allen invents a valve-gear having a variable cut-off with positive movement, and introduces the multiport principle, and in 1863 makes it a balanced valve.

1860. Chas. T. Porter employs these inventions of Mr. Allen to make a high-speed engine with automatic cut-off.

1860. Charles T. Porter invents the isochronous spring-governor, using a spring with initial tension so as to exert a resistance which varies directly as the diameter of the circle described by the balls. This underlies the shaft-governor.

1860. Chas. B. Richards invents the first indicator in which the motion of the piston was multiplied.

1868. Hartnell of England patents control of throw of eccentric

by revolving weights balanced by springs, in plane of rotation of the engine-shaft, but moves eccentric from forward towards backward position, and not towards the centre of the shaft.

1872–73. John C. Hoadley applies the balanced-spring shaft-governor to control the throw of a single piston-valve in an automatic cut-off engine by moving eccentric across the shaft and giving invariable lead but variable cut-off release and compression.

1874. A. C. Kirk introduces triple-expansion in S.S. Propontis.

NOTES.

1. The sun's energy stored in vegetation in geologic times reappears in the burning of fuel. The sun also nourishes the plants which support animal life. Without the dynamogenous properties of sunlight there would be no motor forces.

Potential energy becomes actual energy when it is allowed to produce motion.

2–4. The science of Thermodynamics treats of the mutual convertibility of heat and work, the indestructibility of force, and the conservation of energy. It belongs to the field of dynamic engineering.

6. Since Mariotte's law gives $p_0v_0 = pv$, and its combination with Gay-Lussac's law gives $\frac{p_0v_0}{T_0} = \frac{pv}{T}$, whence $pv = RT$, it follows that the supply of heat and the supply of power to the engine are convertible terms. Hence a medium for conveying heat into the cylinder is valuable in proportion to its ability as a heat-carrier. Any other fluid can be used instead of water—air, alcohol, ammonia, bisulphide of carbon, etc.,—but they require a larger cylinder for equal power, or are troublesome on account of leakage, or the difficulty of condensation or their cost. Gas-engines carry the heat into the cylinder directly. Consult Transactions A. S. M. E., vol. x. p. 657.

8. If the mean pressure and piston-speed in any district or at any period conform to accepted figures, handy approximate formulæ for H.P. can be derived from the exact equation. The values for P average between 30 and 40 and for LN between 700 and 500 in ordinary Corliss practice and many short-stroke high-speed engines, or $PLN = 21000$. Hence the rough rule may be made for such engines that the horse-power is one half the square of the cylinder diameter. This must be used with caution, as it is a *nominal* horse-power, and is true only for certain conditions, and may lead to error when applied outside of them.

9–10. To prove the efficiency of a typical steam-engine mechanism: If the connecting-rod be assumed to be of infinite length, or replaced by a yoke like that in Fig. 4, we have the most unfavorable case. Let P denote the

pressure on the piston-area, and V its velocity at any point of its traverse. Let p denote the tangential effort on the crank-pin revolving in its circular path and v its velocity. These may be uniform or constant, but in any case the time may be taken short enough to have them considered constant without error.

If now a circle be drawn representing the path of the crank, and at any point the pressure P be represented in direction and intensity by a line parallel to the axis of the cylinder acting at that point, it can be decomposed into two components at right angles, one tangential and one normal. The tangential component will be the effort p at that point, and will be perpendicular to the radius. The normal component will coincide with the radius produced. If the tangential component p be projected on the piston effort P, there will be three similar right-angled triangles produced. From these it will appear that the tangential pressure on the pin will equal the piston-pressure into the sine of the crank-angle, becoming equal to it at 90° and 270°, and being zero at 0° and 180°. The velocities of crank-pin and piston will be to each other in such a relation that the pin-velocity will be a mean proportional between the piston-velocity and the projection of the pin-velocity on the direction of the piston-velocity. (Legendre, Bk. IV, Prop. XXII). Hence, from what has preceded,

$$v : V :: p : P,$$

or

$$Pv = pV$$

for an instant of time and for any point. Hence, at any point the work given to the piston equals that received by the crank, less the loss from friction of joints or moving parts. In other words, the crank mechanism is theoretically perfect.

11. For marine-engine mechanisms used in old vessels of British navy, consult John Bourne, Treatise on the Screw Propeller, London 1867. pp. 380, 386.

17. For a steam-balanced vertical engine, see Durfee, Trans. A. S. M. E., vol. IV. p. 368, No. 125.

23. For design of a walking-beam, consult Whitham. Steam-engine Design, p. 350; Constructive Steam Engineering, p. 594.

31. For steam-turbines see Trans. A. S. M. E., vol. X. p. 680; vol. XVII. p. 81.

35. It has been urged that the short exposure of steam and metal of the cylinder to each other at high rotative speeds would diminish the reaction and interchange of heat. The interchange seems so instantaneous that the effect of high speed is less than was supposed. Consult Denton, Trans. A. S. M. E., vol. X. p. 722; Barr, Ibid., vol. XVI. p. 446.

39. Authorities on Cornish engine are Pole, Wicksteed, and Farey, in Britain: Clarence King, on American practice.

49. The injection must condense the steam to water by absorbing the heat of vaporization or latent heat, and must then lower the temperature of the water to that belonging to the pressure in the condenser. The total

heat of the steam at any temperature t which corresponds to the pressure of the exhaust-steam is given by the formula (from Regnault)

$$Q = 1092 + .305(t - 32)$$

in British thermal units. The latent heat of vaporization is approximately given by the formula (Rankine, from Regnault)

$$L = 1092 - 0.7(t - 32)$$

Hence the weight w of steam carries a quantity of heat in thermal units represented by

$$w\,(Q - t'),$$

where t' is the final temperature of the steam condensed to water, and the injection mixed with it. The weight of injection-water w' is raised from the cold-well temperature t to the common final temperature t'; these must equal each other; or

$$w'\,(t' - t) = w\,(Q - t')$$

whence

$$w' = \frac{w\,(Q - t')}{t' - t}$$

As an example, if the steam came into the condenser at 35 pounds pressure above vacuum, with a temperature of 229° Fahr., it will carry 1152 units of heat per pound with it. If the final temperature of the condensed steam and injection is 120° Fahr. and the injection enters at 60°, the weight of injection required will be

$$w' = \frac{1152 - 120}{60} = 17 + \text{times the weight of steam.}$$

The usual proportion is from 25 to 30 times in cool climates or seasons, with provision for 35 times in warm weather or climate.

50. The Worthington self-cooling condenser is described by Mr. Louis R. Alberger, Trans. A. S. M. E., vol. XVII. p. 625, "A Self-cooling Condenser."

Other forms are designed by Mr. Geo. A. Barnard, using wire-gauze instead of tiles. See also Fitt Evaporative Condenser Trans. A. S. M. E., vol. XIV. p. 690. No. 534; also Henrich, Trans. A. I. M. E., 1895.

52. For a surface condenser the same formula applies, but the injection is heated less, and so more weight is required. Whitham, A. S. M. E., vol. IX. page 427, gives

$$w' = \frac{w(L + T_1 - T_2)}{t' - t},$$

in which T is the temperature of the steam at the pressure indicated by the vacuum-gauge, and T_2 is the temperature in the hot-well. This latter is not the same as t_1, as in the case of the jet condenser. This makes the ratio of circulating water to steam condensed approach 70, and gives a circulating-

pump from 1/20 to 1/30 of the cylinder volume, if single-acting. The surface for condensation is often made 2/3 of the boiler heating-surface.

Seaton gives (Manual of Marine Engineering, p. 198) with the injection at 60° the following table:

Absolute Terminal Pressure in the Cylinder.	The Square Feet of Condensing Surface per H.P. should be
6	1.50
8	1.60
10	1.80
12.5	2.00
15	2.25
20	2.50
30	3.00

Whitham's Rule (Trans. A. S. M. E. vol. IX. p. 425) is

$$S = \frac{WL}{180(T_1 - t)},$$

in which t is the arithmetical mean temperature of the circulating water.

The velocity of flow of water in condenser-tubes should be not less than 400 nor more than 700 feet per minute.

Experiments on condenser surfaces are by J. P. Joule, Jour. Franklin Inst., 1862, p. 36; by Isherwood, Shock's Steam-boilers, p. 58; by Nichol, Engineering of London, vol. XX., 1875, p. 449.

53. The form of surface condenser shown is the design of Mr. Fredk. Meriam Wheeler.

57. For description of Morton Condenser, see Jour. Frank. Inst., Nov. 1868. Also Trans. Inst. of Engineers of Scotland, 1868.

63. See Robinson, Trans. A. S. M. E., vol. III. p. 130, No. 64.

65. See also Kent's Mech. Engineer's Pocket-book, p. 761; also D. K. Clark, Steam-engine.

70. See Hoadley, Trans. A. S. M. E., vol. I. p. 155, No. 12; also Trials of Steam Machinery of Revenue Steamers Rush, Dexter, Dallas, U. S. Treasury Dept., Nov. 1874, by Messrs. Loring and Emery; also Tests of U. S. Coast Survey Steamer Bache, May 1874, by Emery, Trans. A. S. C. E., Dec. 1874; also Tests of Gallatin, by Loring and Emery.

72. Consult Whitham, Cylinder Ratios of Triple-expansion Engines, Trans. A. S. M. E., vol. X. p. 576.

For Rockwood proportions, consult Trans. A. S. M. E., vol. XIII. p. 647; vol. XVI. pp. 169, 179.

75-78. The area of the diagram of effort (Figs. 111 and 112) can also be reduced by increasing the compression by early closure of the exhaust-valve. The first effect is to cause the cylinder to pump pressure back into the boiler and convert work back into heat, which is a storing of excess of energy, and thereafter the area of the card is diminished by moving the bounding curve at the right hand towards the left in those figures. Con-

sult Tabor, Trans. A. S. M. E., vol. v. p. 48, No. 132. Thurston, Trans. A. S. M. E., vol. II. p. 338, No. 45.

76. Consult Porter, Trans. A. S. M. E., vol. XVI. p. 111, No. 615.

77. W. J. M. Rankine and Brownlee describe cylinder condensation and re-evaporation in Trans. Inst. of Engineers of Scotland, 1860–61. C. E. Emery describes experiments of 1864–68 with non-conducting linings for cylinders, Trans. A. S. M. E., vol. VII. p. 375, No. 204. See also vol. I. p. 185.

81. By reference to Fig. 131 it will be apparent that if the angular velocity of the crank-pin be ω, the space described by it will be $R\omega$, and the velocity of a horizontal piston will be $R\omega \cos \omega$. If the area of the piston be A, the volume to be filled in a time dt will be

$$AR\omega \cos \omega\, dt. \quad \ldots\ldots\ldots\ldots \quad (1)$$

If x denote the linear velocity of flow of steam through the port in the valve-seat whose length is l, and r be the radius of the valve-crank, then during the same time dt the motion from its central position for the same angular velocity ω will be $r \cos \omega\, dt$, opening an area $lr \cos \omega\, dt$ through which a volume of steam passes equal to

$$xlr \cos \omega\, dt. \quad \ldots\ldots\ldots\ldots \quad (2)$$

Since these should be equal to each other, by equating (1) and (2) the value of x becomes

$$x = \frac{AR}{lr}(\omega), \quad \ldots\ldots\ldots\ldots \quad (3)$$

which is a quantity involving the crank-pin or rotative speed only, which is common to both cranks, and the arbitrary constants which fix the linear velocity of the steam. In other words, the steam enters at all angles with the velocity determined by cylinder volume and port-area, and not by variation in relation of the crank angles.

93. Consult also Catechism of the Locomotive Engine, by M. N. Forney. Also, D. K. Clark, Railway Machinery (very full discussion).

94. Prof. Zeuner's demonstration seeks to find the distance the valve has moved from its central position when the main crank and valve-crank

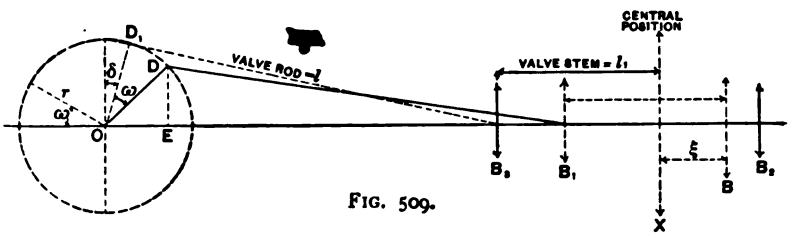

FIG. 509.

have moved through an angle ω. If r is the radius of the valve-crank, l and l_1 the lengths of the valve-rod to the knuckle-joint and the valve-stem

proper respectively, then from the diagram in which the line through X fixes the central position of the valve, the length BX may represent the space the valve has gone to the right for the angles δ and ω. If this distance be called ξ, then

$$\xi = BX = OB - OX.$$

To find a value for OB:

$$OB = OE + EB_1 + BB_1$$

$$= OE + BB_1 + \sqrt{DB_1^2 - DE^2}$$

$$= r \sin(\omega + \delta) + l_1 + \sqrt{l^2 - r^2 \cos^2(\omega + \delta)}.$$

But $$\left(l - \frac{r^2 \cos^2(\omega + \delta)}{2l}\right)^2 = l^2 - r^2 \cos^2(\omega + \delta) + \frac{r^4 \cos^4(\omega + \delta)}{4l^2}$$

$$\therefore OB = r \sin(\omega + \delta) + l_1 + l - \frac{r^2 \cos^2(\omega + \delta)}{2l},$$

when the last term is neglected as being so small a quantity as to be negligible.

Similarly, a value for OX is

$$OX = \frac{OB_2 + OB_2}{2} = l_1 + l - \frac{r^2 \cos^2\delta}{2l}.$$

Combining these values and substituting,

$$BX = \xi = r \sin(\omega + \delta) + l_1 + l - \frac{r^2 \cos^2(\omega + \delta)}{2l} - \left[l_1 + l - \frac{r^2 \cos^2\delta}{2l}\right]$$

$$= r \sin(\omega + \delta) + \frac{r^2}{2l}\left[\cos^2\delta - \cos^2(\omega + \delta)\right]$$

$$= r \sin\delta \cos\omega + r \cos\delta \sin\omega + F.$$

If $$r \sin\delta = A$$

and $$r \cos\delta = B,$$

$$\xi = A \cos\omega + B \sin\omega + F.$$

F is a term to include the motion due to the angularity of the valve-rod. It is a small quantity, because the length l is always great compared to r, and the cosines of the angles are small, and their squares smaller. The quantity F may therefore be dropped for convenience, or treated as a "missing quantity."

The equation for ξ will give also the value of the radius vector if a pole be taken in the circumference of a circle the co-ordinates of whose centre

are $OB = a = \frac{A}{2}$ and $BC = b = \frac{B}{2}$, and whose diameter is r. For if P_2 be any point whose radius vector is OP_2 and the angle $MOP = \omega$, then if

$$OM = \xi \cos \omega,$$

and

$$MP = \xi \sin w$$

it can be proved that

$$CN^2 + NP^2 = CP^2 = \left(\frac{r}{2}\right)^2,$$

$$(OM - OB)^2 + (MP - MN)^2 = \left(\frac{r}{2}\right)^2,$$

$$(\xi \cos \omega - a)^2 + (\xi \sin \omega - b)^2 = \left(\frac{r}{2}\right)^2,$$

$$^2 \cos^2 \omega - 2a\xi \cos \omega + a^2$$

$$+ \xi^2 \sin^2 \omega - 2b\xi \sin \omega + b^2 = \left(\frac{r}{2}\right)^2,$$

$$\xi^2 (\cos^2 \omega + \sin^2 \omega) = 2(a \cos \omega + b \sin \omega),$$

whence

$$\xi = 2a \cos \omega + 2b \sin \omega;$$

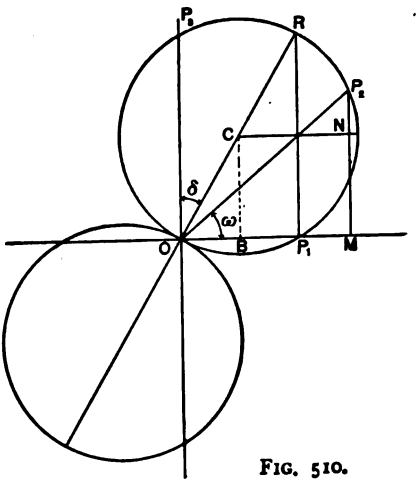

FIG. 510.

and if

$$2a = A \text{ and } 2b = B,$$

$$\xi = A \cos \omega + B \sin \omega.$$

Or in other words, the motion of the valve from its central position may be represented by, or replaced by, the length of the radius vector of a polar circle, whose diameter is the throw of the valve. The radius vector when ω is zero determines the angle P_2OR, because the main crank being at its dead-centre the valve should have a radius vector equal to the sum of the lap and the lead.

96. The authorities on valve-gears are:

E. J. C. Welch: Designing Valve-gears.
H. W. Spangler:
C. H. Peabody:
F. A. Halsey:
Hugo Bilgram:
Holmes on the Steam-engine.
Blaha, Schiebersteuerung.

103. Consult Robinson, Trans. A. S. M. E., vol. IV. p. 150, No. 97

103. To evaluate the pressures to be balanced on a slide-valve, suppose a locomotive-valve 17 inches wide and 10½ inches long, having a lap of 1 inch, a travel of 4 inches, a port of 14½ by 1½ inches, and an exhaust hollow of 6 × 14½ inches. Let the valve be working with the lever in the eight-inch notch, or cutting off at one third stroke. The following areas and pressures will prevail:

Port-area = 18 square inches . . . . . (1)
Exhaust-hollow = 87 square inches . . . . . (2)
Gauge-pressure = 160 lbs. per sq. inch . . . . (3)

Back-pressure	= 5 lbs. per sq. inch . . .	(4)
Mean pressure	= 110 " " " " . . .	(5)
Cushion-pressure	= 40 " " " " . . .	(6)

The downward pressure during admission, or one-third stroke, is exerted on $10 \times 17 = 170$ square inches.

After cut-off, during expansion, or two-third stroke, the whole area receives pressure $= 10\frac{1}{2} \times 17 = 178$ square inches. The average area or 174 square inches receives a downward pressure of 160 lbs. per square inch = 27840 lbs., or nearly 14 tons.

Upward pressure from the cylinder relieves this somewhat.

In the	one	third	during	admission	(2)	has	(4) upon it	= 435 lbs.
"	"	second	third,		(1)	has	(5) upon it	= 1980 "
"	"	"	"		(2)	"	(4) " "	= 435 "
"	"	third	third		(1)	"	(6) " "	= 720 "
"	"	"	"		(1)	"	(5) " "	= 1980 "
							Summation =	5550 lbs.
							or an average through the stroke of	1850 "

Subtracting this from the average downward pressure 27840 − 1850 = 25990 lbs. net average downward pressure.

110. Consult Uhland-Tolhausen, Corliss Engines, London, 1879. Also J. T. Henthorn, on the Corliss Engine.

112. A disadvantage of the trip-gears is the variable length of the valve-travel, whereby the valve-seat is worn unequally.

114. For authorities on link-motion consult:

Rankine, Machinery and Millwork.
Zeuner, Treatise on Valve-gears.
W. S. Auchincloss, Link and Valve-motions.
N. P. Burgh, Link-motion and Expansion-gear, London, 1870.

125. For a locomotive steam reverse-gear with hydraulic stop-cylinder, consult R. R. Gazette, Nov. 18, 1881. Also *Recent Locomotives*, 1886, Figs. 29-31.

131. Consult Weisbach-Herrmann-Klein, Mechanics of Engineering, vol. III. Part I. Section II. p. 990, Edition of 1890.

140. For shaft-governors, see Thurston, *Manual of the Steam-engine*, Part II. p. 292. Also, Trans. A. S. M. E., vol. XI. p. 1068, 1081; vol. XIV. p. 92; XV. p. 929; vol. XVI. p. 729.

147. For Svedberg's marine governor operating by varying immersion of the stern of the vessel, consult Whitham, Const. Steam Engineering, p. 372.

152. Consult Whitham, Const. Steam Engineering, p. 129.

159. The cylinder volume at a given speed of rotation should be a maximum to make PV a maximum (parag. 6); but to diminish the surface of metal radiating heat outwardly and absorbing it from the steam, such surface should be a minimum. Such minimum surface is when the stroke equals the diameter, and were all surfaces of equal effect this would give best results. (For calculation of minimum, see Thurston, Manual of the Steam-engine, Part II. p. 65.) But the heads and the piston are much

more effective areas for condensation in an expansive engine than the barrel or cylindrical part; hence the diameter had better be reduced relatively to the length of the stroke. Hence a long-stroke engine results, with a stroke twice the diameter or even greater. Clearance losses are less in a long cylinder also.

162. For steam-jacket, see Loring and Emery, note 70; also Tests of U. S. S. Gallatin, Dec. 1874 and Jan. 1875; also Paper on Cylinder Condensation and Superheating, Soc. of Arts, Mass. Inst. Tech., April 1875, by Geo. B. Dixwell; also Thurston, Trans. A. S. M. E., vol. xv. p. 779, No. 590, and vol. xvii. p. 488, No. 689.

For Superheating, see Isherwood, Experimental Researches, vol. ii.; Experiments on U. S. S. Mackinaw, Eutaw, and Georgeanna.

164. Consult Robinson, Trans. A. S. M. E., vol. ii. p. 19, No. 20; also Rutherford-Hutton, Trans. A. S. M. E., vol. viii. p. 439, No. 246.

170. Consult Emery, Trans. A. S. M. E., vol. ii. p. 40, No. 22.

172. For Parallel Motions, see Arthur Rigg, Treatise on the Steam Engine, 1878, p. 130. Also Weisbach-Herrmann-Klein, Mechanics of Engineering, vol. iii. Part I. Section I. p. 425. Also Rankine, Machinery and Millwork, p. 274.

173. For effect of connecting-rod upon the crank-pin effort, see Arthur Rigg, Treatise on Steam Engine, 1878, p. 258.

174. A rectangular or flat tapering key is often called a cotter. Hence what is here called the gib and key is ofted called the gib and cotter.

184. Accepted fly-wheel formulæ for the weight of rim are:

(1) $$W = 250{,}000\,\frac{ASp}{R^2D^2}, \qquad \text{(Thurston)}$$

or

(2) $$W = 12{,}000{,}000\,\frac{AS}{R^2D^2} \qquad \text{(Thurston)}$$

in which A = piston-area in square inches, S is the stroke in feet, p is the mean pressure of steam in pounds per square inch, R is the revolutions per minute, and D the outside diameter of the wheel in feet

(3) $$W = \frac{C \times [\text{I.H.P.}]}{R^2D^2} \qquad \text{(Rites, A. S. M. E., vol. xiv. p. 100)}$$

In this C varies from ten billion to twenty billion for single-acting Westinghouse engines for electric lighting. For ordinary double-acting engines use five billion.

(4) $$W = 700{,}000\,\frac{\delta^2 S}{R^2D^2}. \qquad \text{(Stanwood)}$$

In this S is the stroke in inches, and δ the diameter of cylinder in inches, and the factor 700,000 is to be used when the piston-speed will not fall below 480 feet per minute, and electric-lighting standard of regularity is exacted. For ordinary duty slide-valve engines, use 350,000; for Corliss engines for electric lighting, use one million.

(5) $$W = 387{,}587{,}500\,\frac{Kn \times [I.H.P.]}{R^3D^2} \qquad \text{(Whitham)}$$

Here K is a permitted ratio of excess or deficiency of crank-effort to the whole crank-effort, and $1/n$ is a fraction denoting the variation of speed—say 1/10 from to 1/100.

Consult: Thurston, Manual of the Steam-engine, Part II. p. 415.
" Whitham, Steam-engine Design, p. 199.
" Kent, Mechanical Engineer's Pocket-book, p. 817.

187. Consult: Stanwood, Trans. A. S. M. E., vol. XIV. p. 251.
" " " " vol. XV.
" Lanza, " " vol. XVI.
" Manning, " " vol. XIII. p. 618.
" Kent, Mechanical Engineer's Pocket-book, p. 820.

191. The area of the pipe in square inches should be

$$\text{Area} = \frac{\text{Area of cylinder in inches} \times \text{piston-speed}}{\text{Mean velocity of steam in pipe in feet.}}$$

The numerator in the second member is a volume V. If it be multiplied by an assumed mean pressure (P) in the cylinder—perhaps 40—and divided by 33,000, and a velocity of 6000 feet per minute be taken for the steam, the formula becomes a formula for area in terms of horse-power; and with these values

$$\text{Area} = .1375 \text{ H.P.}$$

Another form of the pipe formula is

$$\text{H.P.} = 6d^2. \text{ or pipe diameter} = \sqrt{\frac{\text{H.P.}}{6}} = 0.408\sqrt{\text{H.P.}}$$

Exhaust-pipes should compel a steam velocity of 4000 or 5000 feet per minute only.

For steel-riveted pipe, see Manning, Trans. A. S. M. E., vol. XV. p. 571.

195. Authorities on non-conducting coverings:

Emery, Trans. A. S. M. E., vol. II. p. 34.
Hutton, " " vol. III. p. 228.
Ordway, " " vol. V. pp. 73 and 212.
" " " vol. VI. p. 168.
Brill, " " vol. XVI. p. 827.

197. Consult Trans. A. S. M. E., vol. XVII. p. 295, No. 678.

204–206. Consult Kent's Mechanical Engineer's Pocket-book, p. 700.

207. Let an element of the arc of the semicircle be denoted by dx measured along the tangent, and suppose its length perpendicular to the paper to be one inch. Then the area of that element will be $1 \times dx$ and the normal pressure on it Pdx. If this normal be decomposed into horizontal and vertical components, only that perpendicular to AB tends to rupture the joints at A and B. The horizontal components tend to produce rupture along EF. Hence the component V which is $Pdx \cos a$ produces the same effect as the force P acting over the area $7 \times bc$, since $bc = dx \cos a$. Therefore the total upward force is the sum of the projections of all elements of the semi-cylindrical arc, or is equal to PD. Or, again, $Pdx \cos a$ may be integrated between $a = +90$ and $a = -90$, which becomes $P(R + R) = PD$. The sketch at the right shows the reasoning when a solid mass like wood

transmits the pressure to the arc just as the fluid does, and shows the rupturing force to be proportional to the diameter. This was first proposed by Forney.

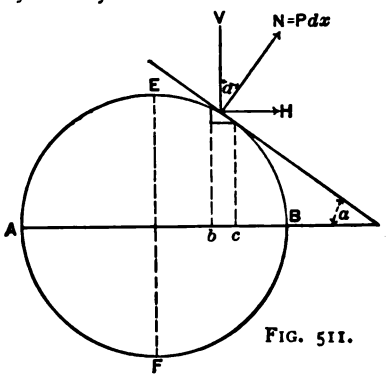

FIG. 511.

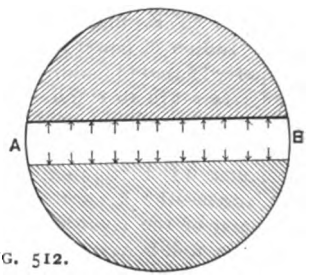

FIG. 512.

213. For punched and drilled plate tests, see Engineering of London, June 1879.

215. For hand and machine riveting compared, and strength of machine-riveted joints, see Tests of Greig and Eyth, reported in Engineering of London, 1879.

216. The Hartford Steam-boiler Insurance Co. have published the following table for iron plates and iron rivets:

TABLE OF PROPORTIONS FOR RIVETED JOINTS.

Thickness of plate.....	1/4 in.	5/16 in.	3/8 in.	7/16 in.	1/2 in.
Diameter of rivet.....	5/8 in.	11/16 in.	3/4 in.	13/16 in.	7/8 in.
Diameter of rivet-hole....	11/16 in.	3/4 in.	13/16 in.	7/8 in.	15/16 in.
Pitch, single-riveting....	2	$2\frac{1}{16}$ in.	$2\frac{1}{8}$ in.	$2\frac{3}{16}$ in.	$2\frac{1}{4}$ in.
Pitch, double-riveting....	3	$3\frac{1}{8}$ in.	$3\frac{1}{4}$ in.	$3\frac{3}{8}$ in.	$3\frac{1}{2}$ in.
Efficiency, single-riveting	.66	.64	.62	.60	.58
Efficiency, double-riveting	.77	.76	.75	.74	.73

For steel plates and iron rivets they advise the use of the following

TABLE OF PROPORTIONS FOR RIVETED JOINTS IN STEEL PLATES WITH IRON RIVETS.

Thickness of plate.....	1/4 in.	5/16 in.	3/8 in.	7/16 in.	1/2 in.
Diameter of rivet.....	11/16 in.	3/4 in.	13/16 in.	7/8 in.	15/16 in.
Diameter of rivet-hole....	3/4 in.	13/16 in.	7/8 in.	15/16 in.	1 in.
Pitch, single-riveting....	2 in.	$2\frac{1}{16}$ in.	$2\frac{1}{8}$ in.	$2\frac{3}{16}$ in.	$2\frac{1}{4}$ in.
Pitch, double-riveting...	3 in.	$3\frac{1}{8}$ in.	$3\frac{1}{4}$ in.	$3\frac{3}{8}$ in.	$3\frac{1}{2}$ in.

From the above it appears that the only change from the former table consists in making the rivets just 1/16 of an inch larger for each thickness of plate. This, on the assumption that the best rivets resist a shearing-stress of 48,000 lbs. per square inch of section, will give about equal strength to plate and rivet.

The following are the latest instructions issued by the British Admiralty

for testing steel rivets: The rivets are to be made from steel bars, having an ultimate tensile strength of not less than 58,000 pounds per square inch of section nor more than 67,000 pounds, with a minimum elongation of not less than 20 per cent in a length of 8 inches. A portion of one bar in every fifty to be taken for testing before being made into rivets. Pieces cut from every bar, heated uniformly to a low cherry-red, and cooled in water at 82° F., must stand bending in a press to a curve of which the inner radius is equal to the radius of the bar tested. Rivets are to be properly heated in making, and the finished rivets allowed to cool gradually. The rivets are to stand the following forge tests: (1) The shank to be bent double cold, without fracture, to a radius equal to the radius of the shank. (2) Bent double hot, without breaking, to as small a radius as possible. (3) Flattening of the rivet-head while hot, without cracking at the edges—the head to be flattened until its diameter is $2\frac{1}{2}$ times the diameter of the rivet-shank. (4) The shank of the rivet to be nicked on one side, and bent over to show the quality of the material. One rivet in every hundred to be forge-tested as a sample.

Consult also Kent's Mechanical Engineer's Pocket-book, p. 354.

232. The U. S. Federal laws fix the formulæ which are to be used in proportioning flues against collapse. They may be grouped as follows:

Case A. For lap-welded flues greater than 7″ in diameter and less than 16″, and 18′ long or less.

$$P = \frac{t}{R} \times 44.$$

For each 3′ of length add $\frac{1}{100}$ of an inch to t. One wrought-iron stiffening-ring to be used in each 5′, whose $t' = t$, and whose width is greater than $2\frac{1}{2}$″.

Case B. Flue greater than 16″ diameter and less than 40″:

$$P = \frac{FT}{C}.$$

Case C. Flues greater than 40″:

$$P = \frac{89600\,T^2}{LD} \qquad \text{[Rankine uses 80600]}$$

Case D. Corrugated flues, $\frac{5}{16}$″ thick or thicker, and the corrugations $1\frac{1}{2}$″ deep, 6″ pitch:

$$P = \frac{14000 \times T}{D}.$$

In these formulæ

$$F = \frac{1760}{D};$$

T = thickness in inches;
P = allowable pressure in lbs. per square inch;
C = constant 0.31;
D = diameter in inches;
L = length in feet (not over 8′).

These were supplemented in January 1894 by adding:

THICKNESS OF MATERIAL REQUIRED FOR TUBES AND FLUES NOT OTHERWISE PROVIDED FOR.

'9. Tubes and flues not exceeding 6 inches in diameter, and made of any required length; and lap-welded flues required to carry a working steam-pressure not to exceed 60 lbs. per square inch and having a diameter not exceeding 16 inches, and a length not exceeding 18 feet; and lap-welded flues required to carry a steam-pressure exceeding 60 lbs. per square inch, and not exceeding 120 lbs. per square inch, and having a diameter not exceeding 16 inches and a length not exceeding 18 feet, and made in sections not exceeding 5 feet in length, and fitted properly one into the other, and substantially riveted; and all such tubes and flues shall have a thickness of material according to their respective diameters, as prescribed in the following table:

Outside Diam.	Thickness.	Outside Diam.	Thickness.	Outside Diam.	Thickness.	Outside Diam.	Thickness.
1 in.	.072 in.	2¼ in.	.109 in.	5 in.	.148 in.	12 in.	.229 in.
1¼	.072	3	.109	6	.165	13	.238
1½	.083	3¼	.120	7	.165	14	.248
1¾	.095	3½	.120	8	.165	15	.259
2	.095	3¾	.120	9	.180	16	.270
2¼	.095	4	.134	10	.203		
2½	.109	4½	.134	11	.220		

"10. Lap welded flues not exceeding 6 inches in diameter may be made of any required length without being made in sections. And all such lap-welded flues and riveted flues not exceeding 6 inches in diameter may be allowed a working steam-pressure not to exceed 225 pounds per square inch, if deemed safe by the inspectors.

"11. Lap-welded flues exceeding 6 inches in diameter and not exceeding 16 inches in diameter, and not exceeding 18 feet in length, and required to carry a steam-pressure not exceeding 60 pounds per square inch, shall not be required to be made in sections.

"12. Lap-welded and riveted flues exceeding 6 inches in diameter and not exceeding 16 inches in diameter, and not exceeding 18 feet in length, and required to carry a steam-pressure exceeding 60 pounds per square inch and not exceeding 120 pounds per square inch, may be allowed, if made in sections not exceeding 5 feet in length, and properly fitted one into the other, and substantially riveted.

"13. Riveted and lap-welded flues exceeding 6 inches in diameter and not exceeding 40 inches in diameter, required to carry a working steam-pressure per square inch exceeding the maximum steam-pressure prescribed for any such flue in the table of section 8 of this rule, shall be constructed under the provisions of section 15 of this rule, and limited to the working steam-pressure therein provided for furnace-flues; but in no case shall the material in any such riveted or lap-welded flue be of less thickness for any given diameter than the least thickness prescribed, in the aforementioned table, for flues of such diameter."

236. See Whitham, Effect of Retarders, Trans. A. S. M. E., vol. XVII. p. 450, No 687.

237. For the holding-power of tubes expanded into tube-sheets see experiments by C. B. Richards at Colt's Patent Fire-arms Co. for Hartford Steam-boiler Ins. Co., published in *The Locomotive* for June 1881.

253-4. Consult Shock, W. N., Steam Boilers, 1880.

273. See Whitham, Autom. Mech. Stokers, Trans. A. S. M. E., vol. XVII. p. 558, No. 690.

283. Other chimney formulæ are:

For iron stacks, $$A' = .0008F \frac{T_1}{\sqrt[3]{H(T_1 - T_a)}};$$

For brick stacks, $$A' = .0016F \frac{T_1}{\sqrt[3]{H(T_1 - T_a)}};$$

in which T_1 is the temperature at the bottom of the stack, T_a the temperature of the air, H the height in feet above the grate. The constant is a factor for friction. Twenty-two pounds of air go for each pound of fuel. (Gale, Trans. A. S. M. E., vol. XI. p. 451.)

Consult also:

Peclet, *Traité de la Chaleur*, in the 3d ed. 1860, p. 217, § 491.
Wood, Trans. A. S. M. E., vol. XI. p. 974.
Webb, " " " XI. p. 762.
" " " " XI. p. 772.
Wood, " " " XI. p. 984.
Thurston, " " " XII. p. 85.

For interference of flue-currents, taking into a common chimney, consult Peclet, *Traité de la Chaleur*, in the 3d edition, 1860, vol. I. p. 206, § 474.

285. Consult Peclet, *Traité de la Chaleur*, in the 3d ed. 1860, p. 252, § 571, vol. I.

For the steam-jet consult Ibid., chap. VII. p. 279, § 619. See Forced Combustion in Steam-boilers, by James Howden, section of Naval Engineering, Congress of Engineering at Chicago, 1893; also Roney, Trans. A. S. M. E., vol. XV. p. 1162; also, Kent, Mechanical Engineer's Pocket-book, p. 714.

287. Coal-calorimeters may be studied by reference to:

Barrus, A Coal-calorimeter, Trans. A. S. M. E., vol. XIV. p. 816.
Mahler's Tests of Coals, Mineral Industry, vol. I. p. 97.
Carpenter's Coal-calorimeter, vol. XVI, Trans. A. S. M. E., p. 1040.

Dulong's formula for the heating-power of a coal, in British thermal units, is

$$\text{Calorific power} = 14500\,C + 62500\,(H - O/8),$$

in which C, H, and O are the percentage of carbon, hydrogen, and oxygen divided by 100 to reduce them to unity.

See also Kent, Mechanical Engineer's Pocket-book, p. 633, and Emery, Trans. A. S. M. E., vol. XVII, No. 677.

290. Heat and Heat-engines, by W. P. Trowbridge, 1874, page 153.

291. The steam-tables most used are those by—

Zeuner, Wärmetheorie.
Porter, C. T, The Steam-engine Indicator.
Trowbridge, Heat and Heat-engines.
Peabody, C. H., Steam-tables.
Röntgen, Rob't, tr. by Du Bois, Principles of Thermodynamics.

292. C. E. Emery, Report of Judges of Group XX, International Exhibition of 1876, p. 131. J. B. Lippincott & Co., Phila., Pa. See also *Estimates for Steam Users*, Emery, Trans. A. S. M. E., vol. v. p. 284, and Cost of Steam Power Produced with Engines of Different Types, Emery, Trans. Am. Inst. Elect. Eng'rs, March 1893 (from which the table is taken).

296. The formula for heat of combustion is

$$\text{Total calorific power of fuel} = \left\{ \begin{array}{l} (T_1 - T_2) \times \text{weight of gas and air} \times \text{sp.} \\ \text{heat of products of combustion.} \end{array} \right.$$

If the total heat of carbon burned to CO_2 be 14,500 heat-units and 24 pounds of air is used and one pound of carbon, and if the mean specific heat be called 0.237, then

$$T_1 - T_2 = \frac{14500}{25 \times .237} = 2447 \text{ Fahr.}$$

The minimum pounds of air per pound of analyzed fuel are given by the formula

$$\text{Air} = 12\text{C} + 36\left(\text{H} - \frac{\text{O}}{8}\right).$$

Consult C. Wye Williams, Combustion of Coal, 1854.

298. Consult Hodgetts, Liquid Fuel.

300. For data and tables, see "Helios," by the Heine Steam-boiler Co. of St. Louis, 4th ed., 1895, p. 36. Also *Colliery Engineer*, 1889-90, for articles by F. J. Rowan. Also D. K. Clark, Treatise on Steam engine.

301. See Reports on Smoke Prevention, Journal of Assoc. Engineering Societies, vol. XI, June 1892, p. 291. See also *Iron Age*, April 7, 1892. Also O. H. Landreth, Report to State Board of Health, of Tennessee. See also *Eng'g News*, June 8, 1893; also Report, March 10, 1888, by C. E. Jones and C. F. White to O. N. Nelson, City Council of Chicago. See also C. Wye Williams, Combustion of Coal and Prevention of Smoke, London, 1854. See also D. K. Clark, Treatise on the Steam-engine; see Bryan, Down-draft Furnace, Trans. A. S. M. E., vol. XVI. p. 773.

303. The specific gravity of mercury is 13.596. If 30 inches of mercury balances one atmosphere of 14.7 pounds pressure per unit of area, one inch corresponds to 0.49 lb. or one pound to 2.04 inches of mercury of that gravity. Impurity in the mercury changing its specific gravity changes the reading.

Consult, for mercury columns, Trans. A. S. M. E., Melvin, vol. II. p. 98; also, vol. XI. p. 892.

317. For the thermodynamics of the injector, consult:

Peabody, C. H., Thermodynamics, Chapter X, p. 145.
Wood, De V., " page 279.
Röntgen, Robt., " Chapter XXII, p. 531 (Du Bois' trans.).

Theory and Practice of the Injector, Strickland L. Kneass.
Kent, Mechan. Engineer's Pocket-book, p. 725.

Consult also Trans. A. S. M. E., vol. x, Webb, pp. 339, 888.

320. If the

$$[\text{total heat heat of steam} - \text{heat of cold feed}] = x,$$

and the

$$[\text{total heat of steam} - \text{heat of hot feed}] = y,$$

then $x - y$ gives the units of heat per pound of feed-water saved by pre-heating by waste heat. Then the saving in percentage will be

$$\frac{x - y}{x},$$

when expressed decimally

321. For composition of fusible alloys, consult Kent's Hand-book for Mechanical Engineers, p. 333.

Newton's alloy is	50 Bi + 31.25 Pb + 18.75 Sn,	and melts at	212°	Fahr.		
Others are	50 Bi + 10 Pb + 40 Sn,	"	"	"	240°	"
" "	50 Bi + 50 Sn	"	"	"	286°	"
" "	66 Pb + 33 Sn	"	"	"	360°	"

324. The loss from blowing hot water from a boiler is found by the following:

Weight evaporated (total heat − feed heat) $= x$
Weight blown out (sensible heat − feed heat) $= y$

Total $= x + y$

$$\frac{y \times 100}{x + y} = \text{loss in per cent by blowing down.}$$

325. For safety-valve formulæ, consult Rankine, Steam-engine, p. 553; Kent, Mechanical Engineer's Pocket-book, p. 721. Experiments on Flow of Steam, by R. D. Napier (see *Engineer* of London, Sept. to Dec. 1869), gave for discharge from a conoidal nozzle per inch of area per second, provided the pressure into which steam flows is less than three fifths of that in the boiler from which it flows,

$$w = \frac{p_1}{70};$$

or, for an area of a square inches,

$$aw = \frac{p_1 a}{70}, \quad \text{whence } a = \frac{70w}{p_1},$$

in which w should be the entire weight of water which the heating-surface can evaporate in one second of time. Some other formulæ for safety-valve areas are:

$$A = \frac{\left[\begin{matrix}\text{grate-area} \\ \text{in sq. ft.}\end{matrix}\right] \times \left[\begin{matrix}\text{rate of combustion in} \\ \text{pounds per sq. ft.}\end{matrix}\right] \times \left[\begin{matrix}\text{pounds of water} \\ \text{evap. per pound} \\ \text{of coal per hour}\end{matrix}\right] \times 70}{3600P}$$

$$= \frac{\text{coal burned per hour}}{5.14P} \text{ (assuming that 10 lbs. of water are evaporated per pound of coal); or}$$

$$A = \frac{\frac{1}{4}W}{p + 10};$$

or $A = 1$ sq. in. to 25 sq. ft. H. S.;

or $A = 1$ sq. in. to 1 sq. ft. G. S.

The lift of a safety-valve is usually a very small quantity. The standard experiments on a conical seated valve four inches in diameter are those of Burg in Vienna. His values were, with a pressure below the valve of

	12	20	35	45	50	70	90
the lift of the valve in inches was	$\frac{1}{64}$	$\frac{1}{48}$	$\frac{1}{32}$	$\frac{1}{24}$	$\frac{1}{20}$	$\frac{1}{16}$	$\frac{1}{12}$

The area of the opening is the cylinder or cone included between the valve and its seat when the valve is open. Its area will be the circumference of the valve, multiplied by the foregoing small lift.

326. The equation for a safety-valve of lever type is

$$(P \times A) \times l = WL,$$

in which A is the area is square inches; P the pressure on each square inch; W the weight in pounds on the long arm of the lever, and strictly should cover the weight of the lever-arm, applied at its centre of gravity; L is the length in feet or inches from the fulcrum to the weight; and l is the length in the same unit from the fulcrum to where the spindle of the valve presses up against the lever. The U. S. law compels l to be more than 4 inches, and L cannot be over 40 inches.

332. The table on page 696, compiled from various sources by Profs. Peabody and Miller, is reproduced by permission.

353. If 10 square feet of plate one quarter of an inch thick be overheated so as to be at 1000° Fahr., it will represent 100 lbs. weight of iron, with a specific heat of 0.112. If water come on that plate at a temperature of even 300° Fahr., it will cool the plate by a transfer of heat to the water; whence

$$Q = w \times c' \times (t_1 - t) = 100 \times 0.112 \times 700 = 7900$$

units of heat received by the unknown weight of water. It takes about 1000 units of heat to vaporize a pound of water under the pressure corresponding to 300° Fahr., or that plate would vaporize about 7.9 lbs. of water only, or less than a gallon, in being cooled to the temperature of the rest of the boiler. The volume of one pound of steam at 300° is 6.28 cubic feet, so that this steam would occupy but 7.9×6.28 or 49.6 cubic feet in the boiler.

353. The following formula, due to Zeuner, shows the time to be allowed to a boiler to pass from one pressure or temperature to another. The lower pressure (t) may be that of the cold feed-water, in which T will give the time required to get up the steam-pressure corresponding to any higher temperature (t_1); or t may correspond to the working-pressure, and t_1 be that corresponding to a pressure which will endanger the shell.

Let T = time in minutes elapsing between the period when a lower temperature (t) prevails, and that at which (t_1) will be the temperature when all outlets are closed for steam or discharge of heat;

MINERAL MATTER IN SOLUTION. GRAINS PER U. S. GALLON.

	Charles River.	Long Pond.	Schuylkill River.	Lake Michigan.	Mississippi River.	Missouri River at Council Bluffs.	Mississippi River at Keokuk.	Riverside, Ill. Well.	Downer's Grove, Ill. Well very Bad.	Rockford, Ill. Artesian Well.	Dead-sea Water.
Silica (SiO_2)	.....	.....	0.0800	0.306	0.863	1.522	1.190	0.484	0.741	0.624	.....
Calcium carbonate ($CaCO_3$)	0.1610	.....	1.8720	4.461	6.870	8.847	4.673	5.237	17.091	8.141	.....
Calcium sulphate ($CaSO_4$)	0.2624	.....	.....	0.309	0.484	2.251	....	0.776	14.037	...	.....
Calcium chloride ($CaCl_2$)	0.0420	0.0308	.....	....	....	....	....	....	....	....	29.220
Magnesium carbonate ($MgCO_3$)	0.0399	.....	0.3510	2.200	4.006	1.866	0.857	4.023	.....	7.336	.....
Magnesium sulphate ($MgSO_4$)	.....	0.1020	0.0570	....	0.338	3.505	....	....	25.422	....	.....
Magnesium chloride ($MgCl_2$)	.....	0.0764	.....	....	....	....	....	....	.....	....	50.950
Magnesium bromide	.....	.....	.....	....	....	....	....	....	.....	....	7.950
Sodium carbonate (Na_2CO_3)	.....	.....	.....	....	....	....	2.129	....	.....	....	.....
Sodium sulphate (Na_2SO_4)	0.3816	.....	.....	....	....	....	....	....	.....	0.554	.....
Sodium chloride (NaCl)	0.1547	0.0323	0.1470	0.225	....	....	0.100	....	.....	0.362	78.650
Potassium carbonate (K_2CO_3)	.....	.....	.....	....	....	....	....	....	.....	....	.....
Potassium sulphate (K_2SO_4)	.....	.....	.....	0.283	....	....	0.430	....	.....	0.525	.....
Potassium chloride (KCl)	.....	0.0380	.....	....	....	....	0.489	....	.....	....	.....
Ferrous carbonate ($FeCO_3$)	.....	.....	.....	0.029	....	....	2.682	...	.....	....	.....
Alumina (with ferric oxide)	.....	0.0800	.....	....	0.233	0.233	....	0.146	0.192	0.087	.....
Organic matter, etc	0.5291	0.5295	1.6436	....	....	....	....	....	.....	....	.....
Suspended mineral matter	.....	.....	.....	....	....	....	1.802	....	.....	....	.....
Suspended organic matter	.....	.....	.....	....	...	....	2.455	....	.....	....	.....

t = temperature corresponding to the lower pressure;
t_1 = " " " " " higher pressure;
W = weight of water in the boiler;
Q = quantity of heat in B T.U. transferred to the water in the boiler per minute.

Then $$T = \frac{W(t_1 - t)}{Q}.$$

The quantity Q for any boiler is found from the expression

$$Q = \frac{\left(\begin{matrix}\text{heating-surface of boiler in square feet}\end{matrix}\right) \times \left(\begin{matrix}\text{pounds of water evaporated per hour per sq. foot of heating-surface}\end{matrix}\right) \times \left(\begin{matrix}\text{the quantity of heat absorbed in evaporating 1 lb. of water.}\end{matrix}\right)}{60}$$

The third factor in the numerator is 966 at atmospheric pressure. For higher pressures it may be called 1000, to make round figures.

Illustrations of the application of this formula would be:

CASE 1. *Locomotive Boiler.*

W = 5000 lbs. of water;
Grate-surface = 11 sq. ft., and each square foot burning 60 lbs. of coal will evaporate 7 lbs. of water per pound of coal per hour, or 77 lbs. of water per minute;
t = working-pressure of 90 lbs. = 319° Fahr.;
t_1 = dangerous " " 175 " = 371° "

$$t_1 - t = 50° + \text{Fahr.}$$

Hence $$T = \frac{5000 \times 50}{77 \times 1000} = 3.2 \text{ minutes.}$$

CASE 2. *Marine Boiler, Flat Surfaces.*

W = 79,000 lbs. of water;
Heating-surface = 5000 square feet, evaporating 3 lbs. of water per hour, or 250 lbs. per minute;
t = working-pressure of 37 lbs. = 262° Fahr.;
t_1 = dangerous " 60 " = 291° "

$$t_1 - t = 29° \text{ "}$$

$$T = \frac{79000 \times 29}{250 + 1000} = 9.1 \text{ minutes.}$$

CASE 3. *Fire-engine (a) Boiler to get up Steam.*

W = 93 lbs. of water, or about 1½ cu. ft.;
Heating-surface = 157 sq. ft., evaporating 1 lb. of water per hour, or 2.6 per minute;
t = atmospheric pressure, or 212° Fahr.
t_1 = working " of 329° or 100 lbs. pressure;

$$t_1 - t = 117°$$

Then $$T = \frac{93 \times 117}{2.6 \times 1000} = 4.2 \text{ minutes.}$$

CASE 4. *Same Boiler (b) to become Dangerous.*

$W = 338$ lbs. of water;

$t_2 = 200$ lbs. pressure, or 388° Fahr.

Then $t_2 - t_1 = 49°$,

and $$T = \frac{338 \times 49}{2.6 \times 1000} = 6.4 \text{ minutes.}$$

It will be apparent that the danger increases with the heating-surface, and diminishes with the greater weight of water contained in the boiler.

354. Nystrom, p. 393, gives dynamic work of gunpowder at 150,000 to 200,000 foot-pounds per pound of powder. Even at atmospheric pressure, the energy resident in one cubic foot of water heated to form steam-gas at that pressure is

$$1700 \times 144 \times 14.7 = 3,598,560 \text{ foot-pounds,}$$

which if all released at once as gunpowder gasefies would bear a ratio of destructive energy of $\frac{3598560}{200000}$, or nearly 18 times that of such powder.

368. For testing of power-plants, see Carpenter, R. C., Experimental Engineering; Trans. A. S. M. E., Standard Methods for Testing Boilers, vol. VI. p. 256, No. 168; Standard Methods for Conducting Duty Trials of Pumping-engines, vol. XI. p. 654, vol. XII. p. 530, No. 381; Standard Methods for Testing Locomotives, vol. XIV. p. 1319, No. 552; Tests of a Warm-blast Apparatus, Hoadley, vol. VI. p. 676. See also Peabody, Thermodynamics, pages 338 to 394; Reports and Awards, Group XX, International Exhibition of 1876; Kent, Mechanical Engineer's Pocket-book, p. 685. For certain standard tests and methods for conducting them see Trans. A. S. M. E., Denton, vol. X. pp. 722, 792; vol. XI. pp. 328, 372; vol. XII. pp. 326, 975; vol. XIV. p. 1340; vol. XV. p. 882; vol. XVI. p. 913. Consult also Thurston, Handbook of Engine and Boiler Trials; and Thurston, Manual of the Steam-engine, Part II, pp. 583 to 722.

370. Ball Pyrometer for Flue-gases.

Since $w \times c \times (t' - t) = w' \times c' \times (t'' - t)$ in a transfer of heat, if a known weight of iron w, with a specific heat of 0.112 be cooled from an unknown temperature t' by immersing it in a tub of water containing a known weight of w' pounds at an initial temperature t'' (both found by observation) and the water is raised by the ball at t' cooling to the final temperature t observed when the ball and water are at the same temperature, the only unknown is t', and can be calculated. The specific heat of water, c', is unity.

371. Coil calorimeter, see Trans. A. S. M. E., vol. VI. p. 296.

Superheating calorimeter, see Trans. A. S. M. E., vol. VII. p. 178; vol. VIII. p. 235.

Throttling calorimeter, see Trans. A. S. M. E., vol. X. p. 327.

Universal, or combined separating and throttling type, vol. XI. p. 790.

For the errors, and for the necessary care in handling calorimeters, see Trans. A. S. M. E., vol. XI. p. 193; vol. XII. p. 825 (very full); vol. XVI. p. 1017; vol. XVII. pp. 151, 175.

Carpenter (Trans. A. S. M. E., vol. XII. p. 825) divides calorimeters into classes as follows:

- Calorimeters
  - Condensing
    - Jet Condenser
      - Hirn's Barrel or Tank.
      - Injector—continuous.
    - Surface Condenser
      - Barrus—continuous.
      - Coil—continuous.
      - Hoadly Calorimeter.
      - Kent—Tank Calorimeter.
  - Superheating
    - External—Barrus Superheating.
    - " Universal.
    - Internal—Peabody Throttling.
- Direct determination of moisture
  - Separator.
  - Chemical.

The barrel-calorimeter was first proposed by Hirn. A sample of steam is taken by a sampling nipple from the pipe and is led by a flexible hose into a barrel of water supported on scales. The weight and temperature of the water having been observed, a valve in the sampling pipe is opened, and a sample of the mixture passing through the pipe is drawn off and blown into the water until its weight increases an observed amount. The water being carefully stirred to equalize the temperature, its rise of temperature is observed. The percentage of water not evaporated into steam is then found by one of the following formulæ:

Let H = heat-units per pound of steam in the mixture;
h = " " " " " water " " "
w = weight of the mixture added to the barrel;
x = weight of steam in this mixture;
$w - x$ = " " water " " "
U = total heat-units transferred to the water in the barrel.

Then
$$U = Hx + h(w - x),$$

in which x is the only unknown quantity.

If tables or formulæ for the latent heat of steam are at hand (see note 291) a simpler form of equation may be used. In this let t denote the heat-units per pound of condensed water added—which will be the difference between the sensible temperature of the steam at its original pressure and the final temperature of the water; let L denote the latent heat of the steam added. Then

$$U = Lx + wt.$$

For references on barrel-calorimeter see Trans. A. S. M. E., vol. VI. p. 288; vol. XII. p. 832; Whitham, Constructive Steam Engineering, page 20; *Power-Steam*, September 1889.

372. The headings for a boiler-test report, approved by a committee of the A. S. M. E. in 1885 and given in vol. VI, Transactions, p. 273.

REPORTING THE TRIAL.

XVII. The final results should be recorded upon a properly prepared blank, and should include as many of the following items as are adapted for the specific object for which the trial is made. The items marked with

a * may be omitted for ordinary trials, but are desirable for comparison with similar data from other sources.

Results of the trials of a .....
Boiler at .....
To determine .....

1. Date of trial.....			
2. Duration of trial	hours.		
DIMENSION AND PROPORTIONS.			
Leave space for complete description.			
3. Grate-surface....wide....long ...Area.....	sq. ft.		
4. Water-heating surface.....	sq. ft.		
5. Superheating-surface.....	sq. ft.		
6. Ratio of water-heating surface to grate-surface.			
AVERAGE PRESSURES.			
7. Steam-pressure in boiler, by gauge.....	lbs.		
*8. Absolute steam-pressure.....	lbs.		
*9. Atmospheric pressure, per barometer.....	in.		
10. Force of draught in inches of water.	in.		
AVERAGE TEMPERATURES.			
*11. Of external air.....	deg.		
*12. Of fire-room	deg.		
*13. Of steam	deg.		
14. Of escaping gases	deg.		
15. Of feed-water	deg.		
FUEL.			
16. Total amount of coal consumed †.....	lbs.		
17. Moisture in coal.....	per cent		
18. Dry coal consumed.....	lbs.		
19. Total refuse, dry.....pounds =.....	per cent		
20. Total combustible (dry weight of coal, Item 18, less refuse, Item 19).....	lbs.		
*21. Dry coal consumed per hour.....	lbs.		
*22. Combustible consumed per hour.....	lbs.		
RESULTS OF CALORIMETRIC TESTS.			
23. Quality of steam, dry steam being taken as unity.....			
24. Percentage of moisture in steam.....	per cent		
25. No. of degrees superheated	deg.		
WATER.			
26. Total weight of water pumped into boiler and apparently evaporated ‡.....	lbs.		

† Including equivalent of wood used in lighting fire. 1 pound of wood equals 0.4 pound coal. Not including unburnt coal withdrawn from fire at end of test.

‡ Corrected for inequality of water-level and steam-pressure at beginning and end of test.

27. Water actually evaporated, corrected for quality of steam †.	lbs.		
28. Equivalent water evaporated into dry steam from and at 212° F.†.	lbs.		
*29. Equivalent total heat derived from fuel in British thermal units †	B. T. U.		
30. Equivalent water evaporated into dry steam from and at 212° F. per hour.	lbs.		
ECONOMIC EVAPORATION.			
31. Water actually evaporated per pound of dry coal from actual pressure and temperature †	lbs.		
32. Equivalent water evaporated per pound of dry coal from and at 212° F.†	lbs.		
33. Equivalent water evaporated per pound of combustible from and at 212° F.†	lbs.		
COMMERCIAL EVAPORATION.			
34. Equivalent water evaporated per pound of dry coal with one-sixth refuse, at 70 pounds gauge-pressure, from temperature of 100° F. = Item 33 multiplied by 0.7249.	lbs.		
RATE OF COMBUSTION.			
35. Dry coal actually burned per square foot of grate-surface per hour	lbs.		
*36. *37. *38. Consumption of dry coal per hour. Coal assumed with one-sixth refuse. † — Per sq. ft. of grate-surface.	lbs.		
Per sq. ft. of water-heating surface. .	lbs.		
Per sq. ft. of least area for draught.	lbs.		
RATE OF EVAPORATION.			
39. Water evaporated from and at 212° F. per sq. ft. of heating-surface per hour.	lbs.		

† The following shows how some of the items in the above table are derived from others:

Item 27 = Item 26 × Item 23

Item 28 = Item 27 × Factor of evaporation.

Factor of evaporation $= \frac{H - h}{965.7}$, H and h being respectively the total heat-units in steam of the average observed pressure and in water of the average observed temperature of feed, as obtained from tables of the properties of steam and water.

Item 29 = Item 27 × $(H - h)$.

Item 31 = Item 27 ÷ Item 18.

Item 32 = Item 28 ÷ Item 18, or = Item 31 × Factor of evaporation.

Item 33 = Item 28 ÷ Item 20, or = Item 32 ÷ (per cent 100 − Item 19).

Items 36 to 38. First term = Item 20 × $\frac{6}{5}$.

Items 40 to 42. First term = Item 39 × 0.8698.

Item 43 = Item 29 × 0.00003, or = $\frac{\text{Item } 30}{34\frac{1}{2}}$.

Item 45 = $\frac{\text{Difference of Items 43 and 44}}{\text{Item 44.}}$

*40.	Water evaporated per hour from temperature of 100° F. into steam of 70 pounds gauge-pressure.†	Per sq. ft. of grate-surface.....	lbs.		
*41.		Per sq. ft. of water-heating surface...	lbs.		
*42.		Per sq. ft. of least area for draught.	lbs.		
	COMMERCIAL HORSE-POWER.				
43.	On basis of thirty pounds of water per hour evaporated from temperature of 100° F. into steam of 70 pounds gauge-pressure (= 34½ lbs. from and at 212°)†.....		H.P.		
44.	Horse-power, builders' rating, at...square feet per horse-power.....		H.P.		
45.	Per cent developed above, or below, rating †.		per cent		

† See note on preceding page.

For other and more extended headings see Trans. A. S. M. E., vol. XVI. pp. 962 and 990, No. 650.

374. See Flather, J. J., Dynamometers and Measurement of Power.

Consult also Trans. A. S. M. E., vol. IV. p. 227; vol. VII. pp. 274, 550; vol. IX. p. 213; vol. X. p. 514; vol. XI. p. 959; vol. XII. pp. 694, 700; vol. XIII. p. 497; vol. XIII. p. 531; vol. XVI. p. 806.

See also *Electrical World*, Sept. 17, 1887.

375. For the indicator, consult Whitham, Const. Steam Eng'g, pp. 136 to 221; Thurston, Manual of the Steam-engine, Part II, pp. 664 to 684; Thos. Pray, Twenty Years with the Indicator; F. W. Bacon, Treatise on the Richards Indicator; Chas. T. Porter, The Steam-engine Indicator, F. F. Heminway, The Steam-engine Indicator; Geo. H. Barrus, the Tabor Indicator.

Also, Trans. A. S. M. E., vol. V. p. 310; vol. VII. p. 489; vol. IX. p. 293; vol. X. p. 586; vol. XV. pp. 277, 45

For friction of engines, see Trans. A. S. M. E., vol. VIII. p. 86; vol. X. pp. 110, 392.

377. For friction of shafting in mills, see Trans. A. S. M. E., vol. VI. p. 461; vol. VII. pp. 138, 265, 449.

378. For electric motors in shops, see *Amer. Engineer and R. R. Journal*, 1894, p. 165; *Ibid.*, 1895, p. 113.

For gas-engine and subdivided power, see *Power*, May, 1895.

382. For fire-protection of mills, see Trans. A. S. M. E., vol. II. p. 301; vol. XI. p. 271; vol. IV. p. 399.

See also circulars of Manufacturers' Mutual Insurance Co. for slow-burning mill-constructions.

INDEX.

PAGE

A frame of vertical engine ... 278
Absorption dynamometer ... 663
Accidents in engine-room ... 657
Acid test for oils ... 657
Action of curving rolls ... 383
steam in compound engines ... 118
Adamson ring for flues ... 442
Agincourt, engine of ... 27
Air cooling of injection-water ... 98
compressor, back-acting, Rand's ... 29
pump and foot-valve ... 99
space in grates ... 523
valves ... 310
Allan link-motion ... 228
Alarm for low water ... 589
Allen link-motion ... 232
sectional boiler ... 468
resistance governor ... 260
valve ... 192
Alignment of foundation-template ... 280
outer pillow-block or outboard bearing ... 283
Almy boiler ... 499
American mechanical stoker ... 534
Analysis of a power plant ... 3
Angstrom valve-gear ... 231
Annealing of steel boiler-plate ... 377
Apparatus for drawing motion-curves ... 176
Armington & Sims piston-valve ... 196
shaft-governor ... 256
Arrangement of a power plant ... 674
rings in boiler-shells ... 383
rivets in a joint ... 400
Artificial draft ... 551
Asbestos packings ... 308
Ash-pit in boiler-settings ... 518
doors in boiler-settings ... 511
Attached air-pump ... 99

PAGE
Automatic cut-off engine ... 148
damper-regulator ... 549
stokers ... 530, 692
water-feeding apparatus ... 608
Auxiliary engine for valve-motion of pumps ... 218

Babcock & Wilcox engine-governor ... 252
engine with steam-thrown valve ... 219
feed-water filter ... 627
mechanical stoker ... 531
sectional boiler ... 461
Bache, test of ... 682
Back-acting engine ... 23
of H. M. S. Agincourt ... 27
S. S. Belle ... 25
Back connection ... 545
Bacon's trunk-engine ... 22
Backward engine ... 15
Balanced engine, Durfee's ... 680
, Wells' ... 69
governor ... 243
governors ... 253
slide-valves ... 193, 685
Balancing of engines ... 274
Baldwin locomotive fire-box ... 483
Baldwinsville rotary pump ... 56
Ball Engine Co. tandem compound ... 121
Balloon boiler ... 371
Banking fires of boilers ... 617
Baragwanath feed-water heater ... 604
Bates-Corliss cylinder and valve-gear ... 218
engine bearing ... 339
engine cross-head ... 316
tandem-engine foundation ... 277
Bay City Iron Works, upright boiler ... 493
Beam compound engine ... 125
Beam-engine of steamer, Francis Skiddy ... 44
engines ... 42
engines of U. S. cruiser Chicago ... 46
Bearings, lubrication of ... 651
Bed or frame of a vertical engine ... 271
Bed-plate of a horizontal engine ... 265
Belle, engine of ... 25
Bellerophon, engine of ... 24
Belpaire fire-box ... 415, 489
Bent-tube sectional boilers ... 468
Berryman feed-water heater ... 607

PAGE
Bethlehem rolling-mill engine..... 33
Blast-furnace boiler..... 435
Blisters in boiler-plate..... 376
Blowing-engine, back-acting..... 28
Blow-off valve..... 610
Bogie cross-head guides..... 312
Boiler explosions..... 639
fronts..... 510
heads..... 385
inspection..... 637
, locomotive..... 482
management..... 616
, marine..... 477-479
of steamer Bergen..... 479
Orange..... 481
plate, curving of..... 380
punching-press..... 391
, steel..... 376
, testing of..... 378
, thickness of..... 378
, wrought-iron..... 374
patches..... 635
repairs..... 635
rupture..... 640
scale..... 620, 695
sectional..... 451
, internally fired..... 498
setting..... 504
, shapes of..... 370
shell with few joints..... 384
shells, joints in..... 387
test for efficiency..... 660, 698
tubes..... 445
Boilers, corrosion of..... 631
, classification of..... 421
, deterioration of..... 629
, grooving of..... 630
internally fired..... 471
, overheating of..... 629, 695
, unequal contraction of..... 630
expansion of..... 630
, wear and tear of..... 629
Bolts for engine-foundation..... 278
Boring of cylinder..... 288
Boston pumping-engine fly-wheel..... 347
Bourdon gauge for boiler..... 578
Bowling rings for flues..... 442
Box-piston..... 293

PAGE

Braces, see Stays.
Bramah rotary engine ... 58
Brasses of connecting-rod ... 323
Breeches boiler ... 474
Bridge-wall ... 538
Brown valve gear ... 231
Buckeye engine bed plate ... 270
engine valve ... 191
Buck-stays ... 505
Built-up crank ... 334
Bulkley gravity or siphon condenser ... 107
Bull Cornish pumping-engine ... 74
ring ... 299
Bump-joint for flues ... 439
Bursting pressure for boilers ... 688
Bushing for stub end ... 325
Buss-governor ... 252
Butt-joint ... 403, 404
B valve ... 163
By-pass valve for compound engines ... 353

Cahall water-tube boiler ... 459
Calibration of steam-gauge ... 581
Calorific power of a fuel ... 557
Calorimeter test for quality of steam ... 662, 698
Cam and release valve-gear ... 204
riveting-machine ... 397
Card from indicator ... 666
Care and management of boilers ... 616
Case oscillating engine ... 20
Cast-iron crank ... 331
for boiler material ... 373
grates ... 521
packing-rings ... 298
Cataract of Cornish engine ... 75
Caulking of boiler-seams ... 419
Centre-crank engine ... 15, 329
Centrifugal circulating pump ... 102
governors ... 243
separator for steam-pipe ... 359
Chain grate ... 530
Challenge reversible rotary engine ... 57
Charcoal-iron in boilers ... 375
Check-valves on feed-pipes ... 593
Chimney ... 549
Circulating-pump ... 102
Classes of sectional boilers ... 455

PAGE
Classification of boilers by type 421
engines by use of steam 70
governors 243
Clayton air-compressor 16
Cleaning fires of boilers 617
the heating surface of boilers 618
Closed stoke-hole 551
stub end 323
Closed tube sectional boiler 464
Coal per horse-power per hour 562, 563
square foot of grate 560
Cold-water test of boilers 638
well 97
Collar-bound bearing 339
Colt or West disk-engine 66
Column-pipe for water-guage 584
Coil-boiler 498
Combination horizontal and vertical engine 40
Combustion, air for 567
chamber 541
in locomotive boiler 485
, heat of 560
per square foot of grate 560
Compensators in non-fly-wheel pumps 136
Composite band-wheels 348
Compound engines 117
locomotives 137
rotary engine 61
Compounding above atmosphere 134
without condensation 134
Compressed air for transmitting power 670
Compression as a method of governing 683
in the steam-cylinder 166
Concave calking 419
Concrete foundations 276
Condenser of a condensing engine 91
Condensing and non-condensing engines 85
Conditions for use of cylinder-boilers 433
tubular boilers 449
Conical pendulum-governor 245
Connecting-rod 320
Connections of the governor to control the engine 264
Concentrated or subdivided steam-power 668
Construction of a power house 673
riveted joint 390
engine-foundations 275
Continuous-expansion engines 116
Control of energy in steam-engines 144

PAGE
Cooper, horizontal engine ... 12
Copper as boiler material ... 371
steam-pipe ... 353
Corliss pumping-engine, Pawtucket ... 50
valve-gears ... 211
Cornish pumping-engine of Brooklyn Water-works ... 74, 75
Corliss steam-jacket joint ... 292
upright boiler ... 494
Cornish boiler ... 473
Corrosion of boilers ... 631
Corrosion of steel boiler-plate ... 378
Corrugated flues and furnaces ... 477
pipe for expansion, Wainwright's ... 354
Counterbore in the cylinder ... 289
Counterweighted crank ... 332
Coxe chain-grate ... 530
Cracking of steam boiler-plate ... 377
Craig pump-condenser ... 114
Cranked axle ... 334
Crank end of cylinder ... 13
pin ... 330
pin oiler ... 654
shaft ... 329
Cross-compound engine ... 124
head ... 314
head pin ... 319
Crown-bars ... 414
sheet stays ... 415
Cup leather packing ... 297
Curved-tube sectional boilers ... 468
Curving boiler-plate ... 380
Cushioning in a steam-cylinder ... 166
Cut-off defined ... 82
engines ... 147
governors ... 243
varies by varying angular advance of eccentric ... 239
lap of valve ... 236
point of release or trip ... 240
throw of valve ... 200
Cylinder boiler ... 422
casting ... 287
cocks ... 290
cover ... 288
flue boiler ... 439
in multiple-expansion engines, arrangement of ... 131
jacket ... 290
tubular boiler ... 444
of Worthington-Corliss engine ... 212

PAGE
Cylindrical marine boiler 477

Dake square-piston engine 64
Dallas, tests of 682
Damper in chimney-flue 548
regulator 548
Dashpots of Corliss valve-gear 214
Dead-centres of engine 13
plate of furnace 516
Dean beam pumping-engine 49
De Laval steam turbine 64
Design of a riveted joint 399
slide-valve 181
Deterioration of boilers 628
Diagonal engine, see Inclined.
Diagram of compound engine 116
condensing and non-condensing engines 86
effort in a cut-off engine 148
throttling-engine 147
showing loop 151
expansive working 82
non-expansive working 81
triple engine 130
Woolf compound engine 128
Diaphragm steam-gauge 579
Differential governors 244
Direct-acting engines 41
pump for boiler-feed 596
vertical engine 36
Disengagement area 424
governors 244
Disk-crank 332
engine 61
valve 351
Distribution of power by gas, electricity, or air 670
Doane exhaust-head 365
Domes for boilers 426
Double- and single-acting engines 73
crank 330
connecting-rod 327
Cornish boiler 473
ported valve 193
riveted joint 402
Down-draft furnace 574
Dow steam turbine 62
Dudgeon's tube-expander 447
Dumping-grates 524

PAGE
Dunbar packing 301
spray boiler 470
Duplex injector condenser 110
Durfee's piston-packing 300
Drainage of steam-pipe 357
Draft, artificial 551
Drift-pin 406
Drilling of boiler-plate for rivet-holes 390
Drip-connections 368
Dry pipe in boilers 431
D valve 157
Dynamic equivalent of a heat-unit 4
Dynamometers 663
Dynamometric governors 262

Eccentric 340
fittings for steam-pipe 357
is a crank 159
rod 341
strap 340
Eclipse exhaust-head 365
refrigerating-machine 41
Economic boiler 489
Economy of heating feed-water 603
Economizers 605
Edge planing of boiler-plate 419
Edmiston oil-filter 365
Efficiency defined 83
Egg-ended boiler 371
Ejector condenser with pump 109
Electrical distribution of power 670
Electromagnetic governors 261
Electromotive force liberated from fuel 2
Elephant boiler 434
Energy resident in hot water 642
Energy, sources of 1
Engine constant in horse-power formula 9
foundations and bed-plates 265
lubrication 649
management 645
Equilibrium-valve of Cornish engine 74
Ericsson vibrating engine 65
Errors of indicator 666
Evaporation per square foot of heating-surface 566
Exhaust clearance 167
heads 365
lap 166

PAGE
Exhaust pipe ... 363
steam ejector condenser ... 111
heaters ... 603
Expanding of tubes ... 446
Expansion of boilers ... 509
joints for steam-pipe ... 354
Expansion valve-gear ... 184
Expansive and non-expansive working of engines ... 79
Explosions of boilers ... 639
Extension-fronts in boiler-settings ... 511
External fire-box for boilers ... 572
Externally-fired boilers ... 421
sectional boilers ... 451
Extractors for oil ... 365

Failure of a riveted joint ... 405
Fall River Steamboat Co. inclined compound engine ... 127
False seat for valve ... 239
Farcot governor ... 250
Feathering paddle-wheels ... 38
Feed-pipe ... 592
pump of condensing engine ... 115
pumps for boilers ... 593
water, filtration of ... 626
heating ... 603
introduction of ... 591
purification of ... 626
valves ... 592
Ferry-boat engine without walking-beam ... 36
Fibrous packings ... 296
Field tubes ... 464
Filters for oil ... 365
Filtration of feed-water ... 626
Fink link-motion ... 232
Fire-box iron for boilers ... 375
brick arch for locomotive-boilers ... 486
doors in boiler-settings ... 512
engine boiler ... 495
, rotary ... 55
Fire protection of a power plant ... 675
Firing of boilers ... 616
Fishkill Landing Corliss engine ... 213
Fixed pressure-plate system of Atlas engine ... 197
Flange iron for boilers ... 375
Flanging of heads ... 385
Flexible expansion-joint ... 355
plate balancing system ... 201

PAGE
Flexure of butt-joint ... 403
lap-joint ... 390
Float water-gauges ... 588
Floors of a power plant ... 675
Flue brushes and scrapers ... 619
Flue-boiler ... 439, 690
doors in boiler-settings ... 512
gases, quality of ... 661
heaters ... 605
Flue to chimney ... 546
Flush fronts in boiler-settings ... 511
Fly-ball or conical pendulum governor ... 245
Fly-band-wheels ... 348
Fly-wheel ... 342, 687
pump for boiler-feed ... 595
Footings for engine-foundations ... 276
Foot-valve of air-pump ... 99
Force resident in one pound of fuel ... 559
Forced draft ... 551
Fore-and-aft compound engine ... 124
Forged crank ... 334
Forked connecting-rod ... 327
Forward-running engine ... 15
Foundation-bolts ... 278
Foundations for engines ... 265, 273
Foundation template ... 279
Free expansion in compound engine ... 128
French boiler ... 434
Front connection ... 546
Friction of slide-valves ... 194
Fritz piston-packing ... 301
Fuel-oil under boilers ... 567
, source of motor energy ... 2
Full fronts in boiler-settings ... 510
Fuller's marine-engine governor ... 264
Furnace in boiler-settings ... 520
Fusible plugs ... 590, 694

Gab-hooks ... 222
Gallatin, tests of ... 682
Gallows-frame of beam-engines ... 44
Galloway boiler ... 474
Gang-drill ... 392
Gang or multiple punch ... 392
Gardner spring-governor ... 255
three-cylinder trunk-engine ... 67
Gas as fuel ... 570

PAGE
Gaskets for steam-pipe 352
Gaskill or Holly inclined pumping-engine 40
Gaskill pumping-engine 48–51
Gauge-cocks 587
Geared fly-wheels 349
Gib and key for connecting-rod 323
Gibs for crosshead 315
Giddings engine-valve 202
Girder bed-plate section 269
Gland in stuffing-box 306
Glass water-gauge 583
Gooch link-motion 227
Gonzenbach two-valve gear 186
Gordon & Maxwell cataract-cylinder 76
Governors for steam-engines 241
Grading of steam-pipe 356
Graphite as a lubricant 652
Grate-bars in boiler-settings 521
Grate and heating-surface 565
Gravity as motor force 2
Gravity condenser 105
separator for steam-pipe 360
Grease-cups 655
Green economizer 605
Greene valve-gear 211
Gridiron slide-valve 192
Grooving of boilers 630
Grouping of cylinders in multiple-expansion engine 132, 133
Guides for slides 311
Gusset-stays 413

Hackworth valve-gear 231
Half-blind hole 393
Half-fronts in boiler-settings 511
Hammer test of boilers 639
Hand-holes 419
riveting 395
Hanging of boilers 508
steam-pipe 356
Harrison boiler 456
Hawley down-draft furnace 575
Haystack boiler 371
Heating of bearings 657
Head end of cylinder 13
Heads of boilers 385
Heat of combustion 560
Heating-surface and grate-surface 565

PAGE
Heat, transfer of ... 564
unit, dynamatic equivalent of ... 4
Heine sectional boiler ... 467
Herreshoff water tube boiler ... 502
Heusinger von Waldegg gear ... 230
High-speed engines ... 70
Hicks four-cylinder trunk-engine ... 68
Historical summary ... 677
Hollow bridge-wall ... 538
piston-valve ... 196
Hoppes feed-water heater ... 603
Horizontal engine ... 26
grates ... 535
separator for steam-pipe ... 361
tubular boiler ... 444
sectional boiler ... 460
Hornblower compound engine ... 120
Horse-power of a cylinder ... 7
defined ... 4
in metric units ... 4
nominal ... 5, 679
of the resistance ... 8
Hot-water test of boilers ... 638
Hot-well ... 114
Houston, Stanwood & Gamble cross-compound engine ... 126
18-flue boiler ... 443
Hungarian street-railway power-plant engine ... 32
Hunting of engine-governors ... 242
Huntoon resistance governor ... 260
Hunt stub end ... 326
Z-crank engine ... 66
Hydraulic reversing-gear ... 234
riveting-machine ... 397
Hydrostatic test of boilers ... 638

Inclined-cylinder beam-engine ... 47
Inclined engine ... 36
grates ... 535
Incrustation or scale in boilers ... 620
Ide breaking-cap ... 291
engine cross-head ... 316
Independent air-pump ... 103
Inertia-governors ... 243, 256
Indicator ... 664
Injection defined ... 91
, weight of ... 680
Injector ... 599

PAGE
Injector condenser 106
I section for connecting-rod 325
Inside lap 166
Inspection of boilers 637
Intermediate cylinder defined 117
Intercepting-valves in compound locomotive 138
Internal condensation and re-evaporation defined 84, 683
Internally-fired sectional boilers 498
shell boiler 471
Introduction of feed-water 591
Inverted vertical engine 33
Isochronous governing 242

Jet condenser of steamer Francis Skiddy 92
Joint of bed-plate and foundation 282
Joints in boiler-shells 387
of surface-condenser tubes 95
Jones mechanical stoker 534
Joy valve-gear 69, 229
Junk-ring 294

Kennedy spiral punch for boiler-plate 392
Key and cotter for connecting-rod 323
Keys for crank 331
Kilowatt defined 5
Knock or pound in engine-bearings 658

Lagging the cylinder 292
La France rotary engine 55
Laketon tandem oil-pumping engine 136
Lamination in boiler-plate 376
Lancashire boiler 473
Lane & Bodley connecting-rod 324
cross-heads 315
outboard bearing 285
Lane steam-gauge 580
Lap in slide-valve 164
Lap-joint with cover-plate 403
Lap-riveted joints 401, 402
Leavitt beam-engine (Lawrence) 47
Leavitt, Calumet and Hecla, butt-joint 405
steam jacket-joint 292
Lead in the slide-valve 168
varies in Stephenson link-motion 227
Leakage-grooves in pistons 297

PAGE
Lee exhaust-head ... 365
Length of engine ... 17
Lever riveting-machine ... 397
safety-valve ... 613
Lidgerwood reversible rotary engine ... 57
Limitations of the single slide-valve ... 183
Lyman exhaust head ... 365
Link-motion for riding cut-off valves ... 233
of Stephenson or Howe and others ... 223
Loaded governors ... 247
Locating the bed-plate on the foundation ... 281
Location of a power plant ... 671
Locomobile engines ... 144
Locomotive boiler ... 482
crank ... 334
reverse gear of P. R. R. ... 224
Long cylinder-boilers, hanging of ... 510
Low-speed engines ... 71
Low-water alarm ... 589
Lubrication of the engine ... 649
Lugs for hanging boilers ... 508

McEwen double piston-valve ... 195
McNaught engines ... 125
Machine-riveting ... 395
Magazine feeding-apparatus ... 608
Main bearing ... 337
Malleableized iron in boilers ... 374
Management of boilers ... 616
engines ... 645
Manholes ... 416
Manning boiler ... 491
Marden down-draft furnace ... 576
Marine boiler ... 477
connecting rod ... 326
crank-shaft ... 335
cylinder relief-valve ... 291
engine-governors ... 263
triple open-frame, engine ... 34
Marshall valve-gear ... 231
Martin boiler ... 478
Mass of engine-foundation ... 274
Materials for boilers ... 371
Mattes connecting-rod ... 326
Mead & Dick inertia governors ... 257–259
Mechanical grates ... 529
stokers ... 530

PAGE
Mechanism of compound engine ... 120
engine ... 7, 11, 679
Meyer riding cut-off ... 185
Metallic packings ... 307
Meyer cut-off valve ... 237
Milwaukee, Allis inverted vertical pumping-engine ... 35
Mississippi gauge-cock ... 588
Modifications of locomotive-boiler ... 483
Monadnock monitor engine ... 53
Monarch boiler ... 488
Monitor half-beam engine ... 53
Morton ejector condenser ... 111, 682
Motion-curves for slide-valves ... 172
Motor energy, sources of ... 1
Mouthpiece of boiler-furnace ... 516
for manholes ... 418
Mud-drum ... 437
Multiple-expansion engines ... 117
rivet butt-joint ... 404
Murdoch long valves ... 190
Multiported valve seat ... 193
Multitubular boiler ... 444

Napier connecting-rod ... 326
Nasmyth test for gum in oils ... 656
Nominal horse-power ... 5, 679
Non-condensing engines ... 8
Non-conducting coverings for steam-pipe ... 362, 688
Non-expansive working of engines ... 81
Non-fly-wheel pump ... 596
Nozzles for manholes ... 418

Oil as fuel ... 567
Oil-cup lubricator ... 653
Oil-extractors ... 365
Oil-filters ... 365
Open-frame engine ... 69
Open-stub end ... 323
Orsat gas-analysis apparatus ... 662
Oscillating engine ... 17
paddle-engine ... 19
Outboard bearing, alignment of ... 283
Outer pillow-block, alignment of ... 283
Output of a power plant ... 4
Outside lap ... 164
Overheating of boilers ... 629, 695

PAGE
Packings for piston-rods 306
Paddle-wheel engine of L. B. & S. C. Ry. 38
Parallel motions 319, 687
Parabolic governor 249
Parsons steam turbine 63
Patches on boilers 635
Payne Corliss engine 217
Pendulum engine 65
Pennsylvania R. R. locomotive link-motion 224
Perforated dry pipe 421
Phosphorus in boiler-plate 377
Pickering's spring-governor 253
Pierce rotary boiler 470
Pin-drill for tube-sheets 446
Piston-packings 295
rings 297
rod 303
speed 72
structure of 293
valve 194
Pitman in beam-engines 42
Pitman 320
Pitting of boilers 634
Plain cylinder-boiler 422
slide-valve working full stroke 157
Plate piston 294
Polar diagram for slide-valves 176
Polonceau link-motion 233
Poppet-valves 202
Pop safety-valve 614
Portable engines 144
Porter-Allen pressure-plate system 200
two-valve gear 187
Porter steeple compound engine 123
Position governors 244
Pounds of air per pound of coal 567
coal per square foot of grate 560
water per horse-power per hour 563
pound of coal 562
Power house, construction of 673
plant arrangement of 674
, fire protection of 675
, floors of 675
, location of 671
reversing-gears 233
Preheating feed-water 603
Pressure-plate to balance slide-valve 196
Prevention of boiler-scale 625

PAGE
Previous purification of feed-water 626
Priming of boilers 424
Proportions of compound-engine cylinders 142
slide-valve 158
Prosser tube-expander 447
Pump condensers 112
governor 258
lubricators 650
Pumping-engine, Corliss 50
Dean 49
direct vertical type 37
Gaskill horizontal beam 48
Leavitt, Lawrence 47
Punching and drilling compared 392
Punch and die for boiler-plate 392
Punching of plate for rivet-holes 390
press for boiler-plate, Hilles & Jones 391

Quadruple-expansion engines 117
Quarter-boxes 337
Quartering cranks 17

Radial valve-gear 228
Ransom gravity or siphon condenser 106
Rates of combustion per square foot of grate 561
Ratio of grate-surface to heating-surface 565
Reaction in boiler-explosions 643
Reaming of holes for rivets 394
Receiver in compound engine 124, 135
Reciprocating steam-engine, parts of 9
Recording-gauge 582
Rectangular marine boiler 480
Reduced compound-engine diagram 129
Re-enforced domes for boilers 427
Re-evaporation defined 84, 683
Re-heater in compound locomotive 138
Re-heaters for compound engines 131
Regulation of boiler-fires 618
Releasing-valve gears 210
Relief-valves in the cylinder 200
Removal of boiler-scale 623
Repairs to boilers 635
Resistance governors 258
Reynolds upright boiler 495
Retarders in boiler-tubes 446, 692
Reversing-valve gears 220
Ribbed tubes for boilers 446

PAGE
Richardson locomotive balanced valve..... 198
Rider automatic cut-off with trapezoidal ports..... 238
, inclined engine..... 39
Riding cut-off..... 185
Refined iron in boilers..... 375
Riveted joint, design of..... 399
, failure of..... 405
, strength of..... 399, 689
joints for boiler-shells..... 389
Riveting of piston-rods..... 304
Robertson exhaust-head..... 365
Rocking grates..... 528
valve cam..... 205
Rockwood compound engine..... 143
Roller bearings for valves..... 202
Rolls for curving plate, Hilles & Jones..... 382
Root sectional boiler..... 462
trunk-engine..... 21
Roney mechanical stoker..... 533
Rotary steam-engine..... 52
Running of engines..... 645
Rupture of boilers..... 640
Rush, tests of..... 682

Safety-plugs..... 590
stops..... 262
valve..... 612, 694
water-gauge..... 585
Scale clogging feed-pipes..... 592
in boilers..... 620
Scotch marine boiler..... 477
Schutte exhaust steam-condenser..... 112
Seacock for marine-engine condenser..... 110
Sectional boilers..... 451
internally fired..... 498
coverings for steam-pipe..... 363
Segmental fly-wheels..... 345
Sellers hydraulic riveting-machine..... 397
steam riveting-machine..... 396
Semi-portable engines..... 144
Separators for oil..... 365
steam-pipe..... 359
Serve-tubes for boilers..... 446
Setting of non-expansive slide-valve..... 161
valve by indicator..... 171
sound..... 170
trammel..... 171

PAGE
Shaft-bearing 338
Shaft-governors 244, 255
Shaft of marine engine 336
Shaking-grates 525
Shapes of boilers 370
Shell boilers, externally fired 421
internally fired 471
Shims in aligning engines 282
Shortening steam-passages 189
throw of a valve 191
Shrinkage of pistons 304
Sickles cut-off 210
Side cam 206
crank engine 15, 329
lever engine 49
Sight-feed lubricators 650
Silsby rotary engine 55
Simple and continuous-expansion engines 116
Single acting rotative engines 77
riveted joint 401
slide-valve, limitations of 183
Siphon condenser 106
Slides or guides 311
Slip joint for expansion in steam-pipe 354
Slipper cross-head 69
Smoke-prevention 573, 693
Snifting-valves in the cylinder 290
Soil, supporting power of 273
Solid fly-wheels 345
Spherical-unit sectional boiler 457
Spider piston 293
Spiral riveted pipe 364
Spindle-governors 244
Spring-governors 253
Square-piston engine 61
Standardization of steam-gauge 581
Stationary grates 520
Starting an engine 645
Staying of domes 432
tubular and flue boilers 449
Stays and staying 407
Stead's water-tube boiler 470
Steam-boilers, see Boilers.
Steam-chimney 478, 482
drums for boilers 425
gauge for boiler 578
jacketing 290
jacket for valve-chest 195

PAGE
Steam-jet cleaners 619
packing 301
pipe 351
pressure-test of boilers 638
reversing-gear 234
Steam riveting-machine 396
thrown valves 216
space in boilers 425
turbine 61
Steam-loop for draining steam-pipe 361
Steel boilers 376
crank 332
Steeple compound engine 123
Steinlen loaded parabolic governor 251
Step grates 527
Stephenson link-motion 223
Stern bearing for marine shaft 338
Stevens cut-off for river-boat engines 207
Stiffening-rings for flues 441
Stirling boiler 458
Stokers, mechanical 530
Straight-line engine 272
slipper cross-head 313
Strains in fly-wheels 344
Strap of eccentric 240
Strength of a riveted joint 399
Stub end 321
Structure of beam-engines 43
the piston 293
Stuffing-box 305
Subdivided steam-power 668
Superheating 291
Supporting power of soils 273
Surface condenser 93
Sweet pressure-plate 201

Tandem compound engine 121
Tangye or Porter bed-plate 270
Tank bed-plate 267
Testing boilers for efficiency 660, 699
of boilers for strength 638
boiler-plate 378
the power plant for efficiency 660, 699
Tests of lubricants 656
rivets 400
Theory of boiler explosions 642

PAGE
Theory of the fly-ball or Watt governor 246
Thickness of boiler-plate 378
Three- and four-valve gears 188
Three-furnace boiler 476
Three-way and four-way cock-valves 154
Thornycroft water-tube boiler 501
Throttling engines 145
governors 243
Throttle valve 146, 350
Through-stays 408
Thrust-bearing 336
Tie-rods for boiler-settings 505
Tit drill for tube-sheets 446
Trammel for valve-setting 162
Transmitting dynamometer 663
Transfer of heat 564
Trapezoidal ports for cut-off valve 237
Traps for drainage of steam-pipe 358
Travel of slide-valve 159
Travelling grates 257
Trip-valve gears 210
Triple crank 330
expansion engines 117
engine diagram 130
riveted joint 402
Throw of slide-valve 159
Trunk-engine, Bacon's 22
Gardner's 67
Hicks' 68
of H.M.S. Bellerophon 24
Root's 21
Westinghouse 78
Try-cocks for water-level 587
Tube-cleaners 619
Tubular boiler 444
Tube-joints for surface condensers 95
Turbines, steam 61
Twiss engine with loaded governor 248
Two-flue boiler 440
valve engines 184

Unequal contraction of boilers 630
expansion of boilers 630
Union boiler 434
Pacific R. R. boiler 484
Units of output in a power plant 4

PAGE
Upright boiler ... 491
Use of Zeuner polar diagram ... 180
U. S. cruiser Maine, independent air- and circulating-pump ... 103

Valves and valve-gearing ... 153
balanced by counter-pressure ... 201
Valve-chest location ... 289
gear for high degrees of expansion ... 184
problems and design ... 181
stem ... 341
Valves taking steam internally ... 201
Variable cam ... 206, 209
cut-off engine ... 147
valve-gears ... 235
Velocity of steam in pipe and ports ... 159
Vertical engine ... 31
frame or bed ... 271
tubular sectional boiler ... 460
Vibrating piston-engine ... 64
Vibration of engine-foundations ... 275
V hooks ... 223
Victor reversible filter ... 628

Wagon-boiler ... 422
Wagon-top locomotive boiler ... 483
Wainwright's feed-water heater ... 606
Willans' single-acting central-valve engine ... 80
Walschaert valve-gear ... 230
Walters pendulum or vibrating engine ... 65
Ward water-tube boiler ... 501
Wear and tear of boilers ... 629
Wasting of boiler-plate ... 634
Water evaporated per pound of coal ... 562
gauge for boiler ... 582
grates ... 524
leg front for boiler-settings ... 516
per horse-power per hour ... 563
pocket for draining steam-pipe ... 359
space in boilers ... 425
Waters' spring-governor ... 253
Water-tube or coil boiler ... 498
Watertown engine bed-plate ... 267
rotary engine ... 58
tandem compound engine ... 122
variable cut-off gear ... 237
Watt governor ... 245
Welding of boiler-joints ... 388

PAGE
Wells balanced engine 69
Westinghouse compound single-acting engine 137
relief-valve 291
single-acting engine 78
Wetherill-Corliss engine 268
Wharton-Harrison boiler 456
Wheeler's feed-water heater 606
Wheeler surface condenser 94
Wilkinson mechanical stoker 532
Winans locomotive cam 206
Wipers for river-boat engines 207
Woodbury engine connecting-rod 325
cross-head 318
pressure-plate system 199
Woolf compound engine 120
Wooton fire-box 485, 487
Worthington's ejector condenser 109
self-cooling condenser 100
Wright spring-governor 255
Wrist-plate of Corliss valve-gear 214
Wrist-pin 319
Wrought-iron boilers 374
grate bars 523

Yoke for valve-cam 205
Yoked piston-rod for crank-motion 16

Zell sectional boiler, details 463
Zeuner polar diagram for slide-valves 176, 683